CCD-F555E
RMT-502

SERVICE MANUAL

AEP Model
UK Model
E Model
Australian Model

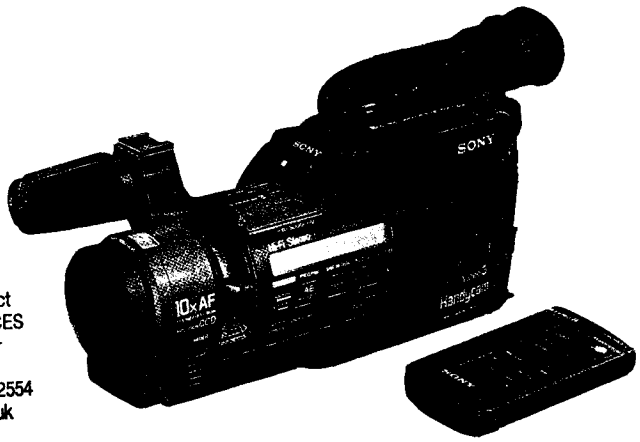

For Service Manuals Contact
MAURITRON TECHNICAL SERVICES
8 Cherry Tree Rd, Chinnor
Oxon OX9 4QY
Tel:- 01844-351694 Fax:- 01844-352554
Email:- enquiries@mauritron.co.uk

Video 8

U MECHANISM

SPECIFICATIONS

System

Video recording system	Rotary two heads, Helical scanning FM system
Audio recording system	Rotary head, FM system
Video signal	PAL colour, CCIR standards
Usable cassette	8 mm video format cassette
Tape speed	SP mode: Approx. 20.051 mm/sec. LP mode: Approx. 10.058 mm/sec.
Recording/Playback time	SP mode: 1 hour 30 min. (P5-90) LP mode: 3 hours (P5-90)
Fast forward/rewind time	Approx. 6 min. 30 sec. (P5-90)
Image device	CCD (Charge Coupled Device)
Viewfinder	Electronic viewfinder (black and white)
Lens	Combined 10 × power zoom lens f=8.5 to 85 mm. F 1.6 with macro Filter diameter: 46 mm
Auto focus system	IR
Colour temperature	AUTO, HOLD ☼ INDOOR 3,200 K • OUTDOOR 5,800 K
Minimum illumination	3 lux (F 1.6)
Illumination range	3 lux to 100,000 lux (0.3 to 9,294 footcandles)
Recommended illumination	More than 100 lux (9 footcandles)
Aperture correction	Automatic with backlight adjustment

Input and output connector

Video output	Phono jack (1), 1 Vp-p, 75 ohms unbalanced, sync negative
Audio output	Phono jack (1), −7.5 dBs, (at output impedance less than 1 kilohm)
Video output	(Australian, E Model)/output Phono jack, 1 Vp-p. 75ohms unbalanced sync negative
Audio output	(Australian, E Model)/output Phono jack (2 : L, R), input (Australian, E Model) : −7.5dBs, input impedance more than 47 kilohms Output: −7.5dBs, (at output impedance 47 kilohms) impedance less than 1 kilohm
RFU DC OUT	Special minijack (1), 5 V DC
Headphone jack	Minijack (1), 8-ohm impedance
Remote jack	Stereo mini-minijack (1)
MIC jack	Stereo minijack, −66 dBs, low impedance with 2.5 to 3 V DC output, impedance 6.8 kilohms
Microphone power output jack	Special minijack, 5 V DC

— Continued on next page —

MICROFILM

8 VIDEO CAMERA RECORDER

SONY

General

Power requirements	
	On battery mounting surface
	6.0 V (battery pack)
	7.5 V (AC power adaptor)
	9.0 V (alkaline batteries)
Power consumption	
	6.9 W (camera recording)
	including the viewfinder
Installation	Vertically,horizontally
Operating temperature	
	0°C to 40°C
Storage temperature	
	–20°C to +60°C
Dimensions	Approx. 111 × 140 × 347 mm
	(w/h/d) ($4^3/_8 \times 5^1/_2 \times 13^3/_4$ in)
Weight	Approx. 1.3 kg (2 lb 12oz)
	excluding the battery and cassette
Microphone	Electret condenser
	microphone, stereo type

Wireless Remote Commmander

Remote control system	
	Infrared control
Command mode	VTR2
Power requirements	
	3 V DC, 2 R6 (size AA) batteries
Dimensions	Approx. 57 × 20 × 120 mm (w/h/d)
	($2^1/_4 \times {}^{13}/_{16} \times 4^3/_4$ inches)
Weight	Approx. 62g (2oz)
	(excluding batteries)

Design and specifications are subject to change without notice.

Note

This appliance conforms with EEC Directive 87/308/EEC regarding interference suppression.

Supplied Accessories

The camcorder is packed together with the following units. Check to see that everything is contained in the package. (* Attached to the camcorder)

- Remote Commander (1)
- R6 (size AA) battery for Remote Commander (2)
- Battery pack NP-66 (1)
- AC power adaptor AC-V65A (1)
- Lithium battery CR2025 (1)
- RFU adaptor RFU-90E or RFU-89EA (1)
  With the RFU-89EA, an aerial selector and a screwdriver are supplied.
- A/V connecting cable (1)
- Plug adaptor (1)
- Cassette tape (1)
- Shoulder strap (1)
- Lens cap (1)*

For Service Manuals Contact
MAURITRON TECHNICAL SERVICES
8 Cherry Tree Rd, Chinnor
Oxon OX9 4QY
Tel:- 01844-351694 Fax:- 01844-352554
Email:- enquiries@mauritron.co.uk

SAFETY CHECK-OUT

After correcting the original service problem, perform the following safety checks before releasing the set to the customer:

1. Check the area of your repair for unsoldered or poorly-soldered connections. Check the entire board surface for solder splashes and bridges.
2. Check the interboard wiring to ensure that no wires are "pinched" or contact high-wattage resistors.
3. Look for unauthorized replacement parts, particularly transistors, that were installed during a previous repair. Point them out to the customer and recommend their replacement.
4. Look for parts which, though functioning, show obvious signs of deterioration. Point them out to the customer and recommend their replacement.
5. Check the B+ voltage to see it is at the values specified.

SAFETY-RELATED COMPONENT WARNING!!

COMPONENTS IDENTIFIED BY MARK ⚠ OR DOTTED LINE WITH MARK ⚠ ON THE SCHEMATIC DIAGRAMS AND IN THE PARTS LIST ARE CRITICAL TO SAFE OPERATION. REPLACE THESE COMPONENTS WITH SONY PARTS WHOSE PART NUMBERS APPEAR AS SHOWN IN THIS MANUAL OR IN SUPPLEMENTS PUBLISHED BY SONY.

SERVICE NOTE

[SEMICONDUCTOR FOR CORRECTION LIST DISPLAY]

Part code and part name of the semiconductor for correction of the print board is discribed in the space of each print figure. Use this list when ordering parts.

[PARTS LOCATION DIAGRAM RELATED TO POWER SUPPLY]

The parts location diagram for the power supply which are often checked and replaced when repairing the fuse and IC link and so on. (See pages 98 and 160.)
This diagram is useful for repair.

[SEMICONDUCTOR LOCATION]

In this service manual, the mounted locations of the semiconductors (IC, transistor, diodes) are indicated in red sa shown below. This enables to find the location on the board easily when servicing.

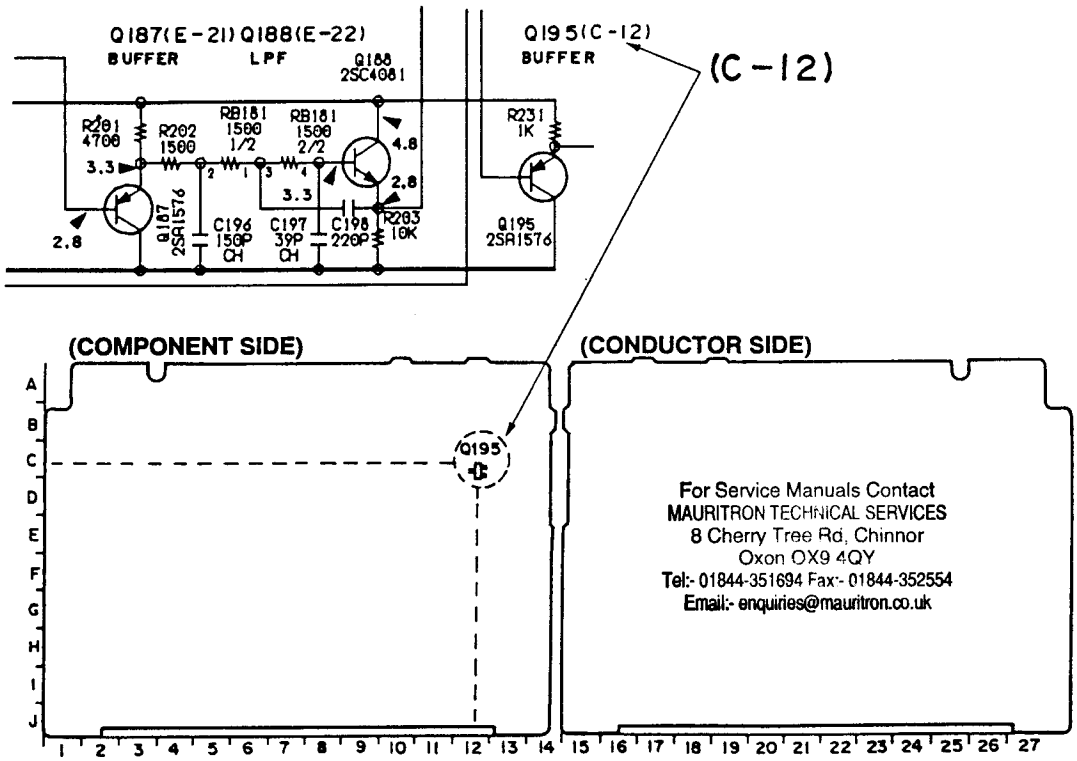

For Service Manuals Contact
MAURITRON TECHNICAL SERVICES
8 Cherry Tree Rd, Chinnor
Oxon OX9 4QY
Tel:- 01844-351694 Fax:- 01844-352554
Email:- enquiries@mauritron.co.uk

[HEAD CLEANING]

After an extended period of use the video image may become indistinct or may not appear at all during playback of a tape. The cause of this usually are dirty video heads. For remedy, cleaning of the heads is required.

Check for Head Clogs During Recording

① Use a blank tape, record a short section, then press the stop button to stop.
② Set to recording mode again.
③ If the [✤] mark is flashing in the viewfinder at this time, head clogs are occurred.

Check During Playback of a Tape

① Play back a pre-recorded tape and display the image on a TV screen.
② If there is no sound and the image is unstable, no image appears on the screen, or tape transport is unstable, head clogs are occurred.

Remedy

[Cleaning method using a cleaning tape]

- Use the Cleaning Tape V8-6CLH. (Please follow the instructions attached to the cleaning tape.)

TABLE OF CONTENTS

Section	Title	Page
SERVICE NOTE		3
1.	GENERAL	
	Identifying the Parts	7
	Connecting the Power Sources	10
	Using the best out of the Battery Pack	12
	Setting the Date and Time	14
	Inserting a Tape	15
	Adjusting the Viewfinder Lens	15
	Recording a Picture using Automatic Adjustments	16
	Selecting the Automatic/Manual Adjustment	19
	Manual Focusing	20
	Adjusting the White Balance	21
	Setting Shutter Speed	22
	Shooting with Backlighting	22
	Using the PROGRAM AE Button	23
	Zooming	24
	Close-up (Macro)	24
	Fade-in and Fade-out	25
	Superimposing a Title	26
	Recording the Age of Your Child	29
	Connections for Playback	30
	Playing Back a Tape	32
	Using the Tape Counter	33
	Editing onto Another VTR	34
	Hints for Better Shooting	34
	Notes and Precautions	35
	Using Your Camcorder Abroad	36
2.	DISASSEMBLY	
2-1.	Removal of Cassette Lid Assembly	37
2-2.	Removal of Cabinet (Upper) Assembly	37
2-3.	Removal of Head Cover Assembly	37
2-4.	Removal of Cabinet (L) Assembly	37
2-5.	Removal of Cabinet (R) Assembly	38
2-6.	Removal of Microphone (MC-82 Board)	38
2-7.	Removal of EVF Assembly	38
2-8.	Removal of Camera Block	39
2-9.	Removal of CCD Imager (CD-60 Board)	39
2-10.	Removal of VA-70 Board	40
2-11.	Opening of SS-136P Board	40
2-12.	Removal of Cassette Compartment Assembly (N)	40
2-13.	Internal Views	41
3.	DIAGRAMS	
3-1.	Circuit Boards Location	42
3-2.	Overall Block Diagram	43
3-3.	Camera (1) Block Diagram	46
3-4.	Camera System Control VC-96 Board IC501 (MC68HC11E9)	51
3-5.	Camera (2) Block Diagram	53
3-6.	Titler Block Diagram	56
3-7.	Video (1) Block Diagram	59
3-8.	Video (2) Block Diagram	62
3-9.	Servo Block Diagram	65
3-10.	System Control Block Diagram	69
3-11.	Mode Control System IC Terminal Function Description FU-104 Board IC501 (µPD75316)	73
3-12.	Servo, System Control System Terminal Function SS-136PP Board IC501 (CXP80116)	76
3-13.	Audio Block Diagram	79
3-14.	Electrical Viewfinder Block Diagram	82
3-15.	Power Block Diagram	84
4.	PRINTED WIRING BOARDS AND SCHEMATIC DIAGRAMS	
4-1.	Frame Schematic Diagram	87
4-2.	Printed Wiring Boards and Schematic Diagrams	91
	• CD-60 Board	92
	• VC-96 Board	99
	• VC-96, AF Boards	107
	• CT-40 Board	116
	• VA-70 Board	123
	• MC-82, SW-175 Boards	141
	• SS-136P, RP-77 Boards	149
	• CC-61, FP-89, FP-90 Boards	157
	• VK-16, DK-12, CK-49, LI-36, ZK-13 Boards	164
	• VF-26, VF-27 Boards	171
	• FU-104 Board	179
4-3.	Semiconductors	185
5.	EXPLODED VIEWS	
5-1.	Cabinet (R) and Cabinet (U) Assemblies	187
5-2.	Cabinet (L) Assembly	188
5-3.	EVF Assembly	189
5-4.	Mechanical Deck Assembly (1)	190
5-5.	Mechanical Deck Assembly (2)	191
5-6.	Mechanical Deck Assembly (3)	192
5-7.	Main Boards Assembly	193
5-8.	Camera Block Assembly	194
5-9.	Zoom Lens Assembly (VCL-8510XA)	195
6.	ELECTRICAL PARTS LIST	196
	HARDWARE LIST	225

For Service Manuals Contact
MAURITRON TECHNICAL SERVICES
8 Cherry Tree Rd, Chinnor
Oxon OX9 4QY
Tel:- 01844-351694 Fax:- 01844-352554
Email:- enquiries@mauritron.co.uk

Section	Title	Page
7.	SERVICE MODE	
7-1.	Senser Lanc	226
7-1-1.	How to Use RM-95 Jig (Adjustment remote controller)	226
7-1-2.	Transfer Method of the Service Mode with RM-95	227
7-1-3.	SENSER LANC Memory Map	228
7-1-4.	Types of Self-diagnostic Feature	229
7-1-5.	How to Use Practically	230
8.	CAMERA ADJUSTMENTS	
8-1.	Pre-Adjustment Preparations (Camera Block)	231
8-1-1.	List of Servicing Jigs	231
8-1-2.	Preparations	233
8-1-3.	Precautions	234
1.	Setting of switches	234
2.	Adjustment order	234
3.	Subjects	234
8-1-4.	Adjustment Remote Controller	235
1.	Use of adjustment remote controller	235
8-1-5.	Precuations on Use of Adjustment Remote Controller	235
8-1-6.	Adjustment Address Table (Page F)	236
8-1-7.	Check Point Array	241
8-1-8.	AF Microprocessor Data Reading Jig	241
8-1-9.	Data Processing	242
8-2.	Camera System Adjustments	243
8-2-1.	Flange Back Adjustment	243
8-2-2.	Auto Focus Adjustment	245
8-2-3.	CAMERA DC-DC converter Check (VC-96, CD-60 Board)	246
8-2-4.	EVR Initial Settings	247
8-2-5.	Prime Oscilation Adjustment (CD-60 Board)	248
8-2-6.	PLL Adjustment (CD-60 Board)	248
8-2-7.	PG CONT and VSUB Adjustment	248
1.	PG CONT adjustment (VC-96 board)	248
2.	VSUB adjustment (VC-96 board)	248
8-2-8.	Iris Adjustment (VC-96 Board)	248
8-2-9.	HALL Adjustment (VC-96 Board)	249
1.	HALL Adjustment 1	249
2.	HALL Adjustment 2	250
3.	HALL Adjustment 3	250
8-2-10.	AGC Adjustment (VC-96 Board)	251
8-2-11.	Matrix Adjustment (VC-96 Board)	251
1.	Y1 Gain Adjustment	251
2.	Y2 Gain Adjustment	252
8-2-12.	YH Level Adjustment (VC-96 Board)	252
8-2-13.	C1 Gain Adjustment (VC-96 Board)	253
8-2-14.	Sync Level Adjustment (VC-96 Board)	253
8-2-15.	Setup Adjustment (VC-96 Board)	254
8-2-16.	White Clip Adjustment (VC-96 Board)	254
8-2-17.	Y Level Adjustment (VC-96 Board)	255
8-2-18.	Max. Gain Adjustment (VC-96 Board)	255
8-2-19.	H Aperture Adjustment (VC-96 Board)	256
8-2-20.	Chroma Level Adjustment (VC-96 Board)	256
8-2-21.	Burst Level Adjustment (VC-96 Board)	256
8-2-22.	Burst Phase Cheak (VC-96 Board)	257
8-2-23.	Pre-White Balance Adjustment (Method Using Vectorscope)	257
8-2-24.	Pre-White Balance Adjustment (Method Using Oscilloscope) (VC-96 Board)	258
8-2-25.	Color Reproduction Adjustment (Method Using Vectorscope)	259
8-2-26.	Color Reproduction Adjustment (Method Using Oscilloscope)	260
1.	Gain adjustment (VC-96 board)	260
2.	Hue adjustment (VC-96 board)	260
8-2-27.	AE OFFSET adjustment (VC-96 board)	261
8-2-28.	Standard AE level and Program AE Level Adjustment (VC-96 board)	261
8-2-29.	Auto White Balance Adjustment	262
1.	Preset adjustment (VC-96 board)	262
2.	Auto white balance adjustment	262
8-2-30.	SHUTTER IN/OUT Adjustment (VC-96 Board)	263
8-2-31.	Indoor White Balance Check (VC-96 Board)	263
8-2-32.	Outdoor White Balance Check (VC-96 Board)	264
8-2-33.	Auto White Balance Check (VC-96 Board)	264
8-3.	Digital Titler System Adjustment	265
8-3-1.	4FSC Frequency Adjustment (CT-40 Board)	265
8-3-2.	Controller Frequency Adjustment (CT-40 Board)	265
8-3-3.	Title A/D Threashold Level Adjustment (CT-40 Board)	266
8-3-4.	Title Chroma Phase Adjustment (CT-40 board)	266
8-4.	Electronic Viewfinder System Adjustment (Type A) (VF-27 Board)	267
8-4-1.	Horizontal Tilt Adjustment	267
8-4-2.	Centering Adjustment	267
8-4-3.	Focus Adjustment	267
8-4-4.	Aberration Adjustment	268
8-4-5.	Horizontal Oscillation Frequency Adjustment (VF-27 Board)	268
8-4-6.	Horizontal Amplitude Adjustment (VF-27 Board)	268
8-4-7.	Vertical Amplitude Adjustment (VF-27 Board)	269
8-4-8.	Brightness, Contrast Adjustments (VF-27 Board)	269
8-4-9.	Horizontal Amplitude, Vertical Amplitude and Focus Checks	269
8-5.	Electronic Viewfinder System Adjustment (Type B) (VF-26 Board)	269
8-5-1.	Horizontal Tilt Adjustment	269
8-5-2.	Centering Adjustment	270
8-5-3.	AFC Adjustment (VF-26 Board)	270
8-5-4.	Horizontal Amplitude Adjustment (VF-26 Board)	270
8-5-5.	Vertical Amplitude Adjustment (VF-26 Board)	271
8-5-6.	Focus Adjustment (VF-26 Board)	271
8-5-7.	Brightness, Contrast Adjustments (VF-26 Board)	271
8-6.	Arrangement Diagrams for Adjustment Parts	272
9.	MECHANICAL ADJUSTMENTS	
9-1.	Setting the Track Shift Mode	277
9-2.	Preparation for Adjustment	277
10.	VIDEO BLOCK ADJUSTMENTS	
10-1.	Pre-Adjustment Preparations (Video Block)	278
10-1-1.	Equipment to be Used	278
10-1-2.	Connection of Equipment	278
10-1-3.	How to Set the REC Mode in the Model without REC Switch	279
10-1-4.	Note on Adjustments	279

For Service Manuals Contact
MAURITRON TECHNICAL SERVICES
8 Cherry Tree Rd, Chinnor
Oxon OX9 4QY
Tel:- 01844-351694 Fax:- 01844-352554
Email:- enquiries@mauritron.co.uk

Section	Title	Page
10-1-5.	Set-up for Adjustment	279
10-1-6.	Alignment Tapes	280
10-1-7.	I/O Level and Impedance	281
10-1-8.	Service Mode	281
10-2.	Power Supply Adjustment	287
10-2-1.	VIDEO 4.9V Adjustment (SS-136P Board)	287
10-2-2.	Oscillation Frequency Adjustment (SS-136P Board)	287
10-2-3.	Power Supply Voltage Check (SS-136P Board)	288
10-3.	System Control System Adjustment	288
10-3-1.	Battery Down Adjustment	288
10-3-2.	Clock Accuracy Adjustment (FU-104 Board)	289
10-4.	Servo System Adjustment	289
10-4-1.	Switching Position Adjustment (SS-136P Board)	289
10-5.	Video Block Adjustments	290
10-5-1.	Playback Frequency Characteristics Adjustment (RP-77 Board)	290
1.	CH1, CH2 adjustment	290
2.	CH1' adjustment	291
10-5-2.	Crystal Oscillator f0 Checking (VA-70 Board)	291
10-5-3.	REC EE LEVEL Adjustment (VA-70 Board)	291
10-5-4.	IR Adjustment (VA-70 Board)	292
10-5-5.	Chroma Comb Filter Adjustment (VA-70 Board)	292
10-5-6.	Emphasis Y Level Adjustment (VA-70 Board)	293
10-5-7.	PB CCD Input Level Adjustment (VA-70 Board)	293
10-5-8.	PB Y Level Adjustment (VA-70 Board)	293
10-5-9.	Y FM Carrier Frequency Adjustment (VA-70 Board)	294
10-5-10.	Y FM Deviation Adjustment (VA-70 Board)	294
10-5-11.	Chroma Emphasis f0 Adjustment (VA-70 Board)	295
10-5-12.	REC C RF Level Adjustment (VA-70 Board)	295
10-5-13.	REC Y Level Adjustment (VA-70 Board)	295
10-5-14.	REC ATF Level Checking (SS-136P Board)	296
10-5-15.	Quasi Burst Phase Adjustment (VA-70 Board) (Method using Vectorscope)	296
10-5-16.	Delay Burst Phase Adjustment (VA-70 Board) (Method using Vectorscope)	297
10-5-17.	Quasi Burst Phase Adjustment (VA-70 Board) (Method using Monitor TV)	297
10-5-18.	Delay Burst Phase Adjustment (VA-70 Board) (Method using Monitor TV)	298
10-6.	Character Generator Adjustments	298
10-6-1.	Character Generator SG Frequency Adjustment (CT-40 Board)	298
10-6-2.	DDS Character Position Adjustment (CT-40 Board)	299
10-7.	Audio System Adjustments	299
10-7-1.	IR Adjustment (VA-70 Board)	300
10-7-2.	1.5 MHz Carrier Frequency Check (VA-70 Board)	301
10-7-3.	1.7 MHz Carrier Frequency Check (VA-70 Board)	301
10-7-4.	1.5 MHz Recording Level Adjustment (VA-70 Board)	301
10-7-5.	1.7 MHz Recording Level Adjustment (VA-70 Board)	301
10-7-6.	E-E Output Level Check (VA-70 Board)	302
10-7-7.	REC Matrix L–R Adjustment (VA-70 Board)	302
10-7-8.	REC Matrix L+R Check (VA-70 Board)	302
10-7-9.	1.5 MHz Deviation Adjustment (VA-70 Board)	302
10-7-10.	1.7 MHz Deviation Adjustment (VA-70 Board)	303
10-7-11.	PB Matrix Adjustment (VA-70 Board)	303
1.	PB Matrix L Adjustment	303
2.	PB Matrix R Check	303
10-7-12.	Overall Level Characteristics, Separation Check (VA-70 Board)	304
10-7-13.	Overall Distortion Check (VA-70 Board)	304
10-7-14.	Overall Noise Level Check (VA-70 Board)	304
10-8.	Arrangement Diagrams for Adjustment Parts	306

For Service Manuals Contact
MAURITRON TECHNICAL SERVICES
8 Cherry Tree Rd, Chinnor
Oxon OX9 4QY
Tel:- 01844-351694 Fax:- 01844-352554
Email:- enquiries@mauritron.co.uk

SECTION 1
GENERAL

This section is extracted from instruction manual.

Identifying the Parts

(A-1)

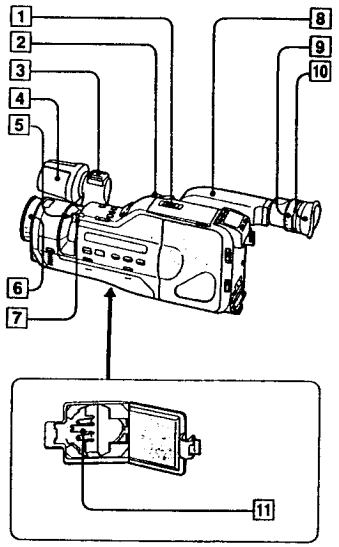

For details on the use of each control, refer to the pages indicated in the circle.

(A-1)

1 **POWER switch**
CAMERA: for camera recording
PLAYER: for playing back or editing tapes
OFF: power off

2 **Power zoom button** ⑱

3 **Accessory shoe**
Attach a video light, external microphone, etc. (not supplied).

4 **Built-in microphone (stereo)**

5 **Macro set button**

6 **Lens hood (Focus ring)** ㉛ ㊵

7 **Zoom lever** ㉘

8 **Viewfinder**
The picture being recorded or played back can be monitored in black and white here. Also, marks such as caution indicators and function mode appear here.

9 **Viewfinder lens adjustment ring** ㉑

10 **Eyecup**

11 **Lithium battery compartment (bottom)** ⑮

(A-2)

To remove dust from inside the viewfinder (A-2)
Detach the eyecup as illustrated and clean the surface of the screen with a blower.

(A-3)

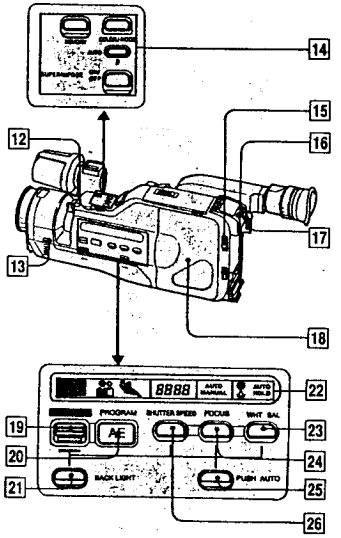

Identifying the Parts

(A-3)

12 **EDITSEARCH (and ⟲ recording review) button** ㉘

13 **FADER button** ㉛

14 **SUPERIMPOSE buttons**
MEMORY button
COLOR/MODE button
AUTO button
SUPERIMPOSE ON/OFF button

15 **EJECT (cassette eject) button** ⑳

16 **BATT (battery eject) knob** ⑫

17 **Camera recording/battery lamp**
Lights up during recording and blinks when the battery becomes weak.

18 **Cassette holder**

19 **AUTOLOCK switch** ㉙
When you record with automatic adjustment, set this switch to the green position.

20 **PROGRAM AE (programme auto exposure) button** ㉝ ㊲

21 **BACK LIGHT button** ㉟

22 **Display window**

23 **WHT BAL (white balance) button** ㉜

24 **FOCUS button** ㉛

25 **PUSH AUTO button** ㉛

26 **SHUTTER SPEED button** ㉛

For Service Manuals Contact
MAURITRON TECHNICAL SERVICES
8 Cherry Tree Rd, Chinnor
Oxon OX9 4QY
Tel:- 01844-351694 Fax:- 01844-352554
Email:- enquiries@mauritron.co.uk

(A-4)

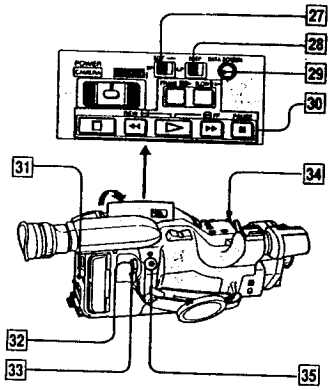

For Service Manuals Contact
MAURITRON TECHNICAL SERVICES
8 Cherry Tree Rd, Chinnor
Oxon OX9 4QY
Tel:- 01844-351694 Fax:- 01844-352554
Email:- enquiries@mauritron.co.uk

(A-4)

27 **REC MODE (recording mode)/EDIT switch** 22 55

Switch it depending on the operating mode.

Mode	Recording	Playback	Editing
Setting	SP LP	EDIT	EDIT
Function	Recording mode switch	EDIT switch	

28 **BEEP switch** 18 21
Normally set to "ON" to activate the recording start/stop beeps and the warning beeps.
To deactivate the beeps, set the switch to "OFF".

29 **DATA SCREEN button** 55

30 **Tape transport buttons** 55 56
>/II ► FRAME (forward direction/frame-by-frame in forward direction)
I► SLOW
□ (stop)
◄◄ REW (rewind)
▷ (playback)
►► FF (fast-forward)
II PAUSE

31 **Battery mounting surface** 12

32 **STANDBY switch** 22
Slide up to set the camcorder to standby mode.

33 **START/STOP button** 22
Press to start and stop camera recording.

34 **Camera recording/battery lamp**

35 **Ω (headphones) jack (stereo minijack)** 48

(A-5)

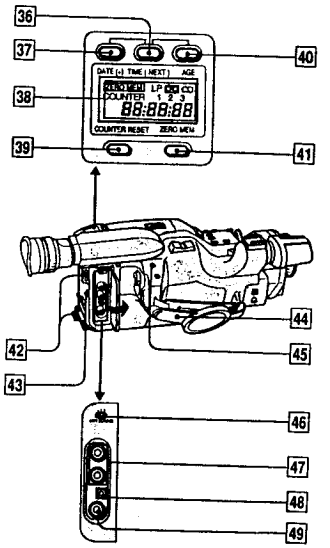

(A-6)

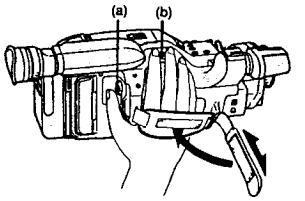

(A-5)

36 **TIME (NEXT) button** 19 25 48

37 **DATE (+) button** 19 25 48

38 **Display window** 55

39 **COUNTER RESET button** 27 55

40 **AGE button** 50

41 **ZERO MEM (zero memory) button** 27 55

42 **Hooks for shoulder strap**

43 **REMOTE COMMANDER ON/OFF switch** 10
Set to "ON" when using the supplied wireless Remote Commander. When you do not use the Commander, set to "OFF" to keep the unit from being operated incorrectly by another Commander, etc.

44 **Grip belt (A-6)**
Adjust the length so that your thumb and fingers can easily manipulate the START/STOP button (a) and the power zoom button (b).

45 **REMOTE (LANC)*control connector (stereo mini-minijack)**
Connect a wired remote control unit or an editing controller, etc. here.

46 **HIFI SOUND selector** 57

47 **AUDIO OUT (output) jacks (phono jacks)**

48 **RFU DC OUT (RFU adaptor DC output) jack (special minijack)**
Attach the supplied RFU adaptor here.

49 **VIDEO OUT (output) jack (phono jack)**

***About the (LANC)**
LANC stands for Local Application Control Bus System. The LANC connector is used for controlling the tape transport of video equipment and peripherals connected to it. This connector has the same function as the connectors indicated as CONTROL L or REMOTE.

(A-7)

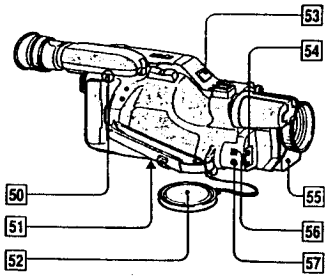

(A-8)

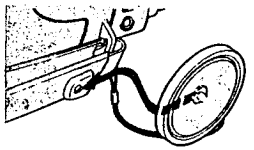

(A-9)

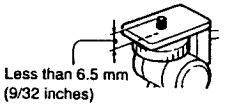

(A-7)

50 PUSH SLIDE (viewfinder positioning) button
Slide the viewfinder to a suitable position.

51 Tripod receptacle (bottom)

52 Lens cap (A-8)

53 Remote sensor ⑩

54 MIC (microphone) jack (stereo minijack) and DC OUT (power output) jack (mini-minijack)
Connect an external stereo microphone (not supplied) to record in stereo, or monaural microphone (not supplied).
The MIC jack accepts a "plug-in-power" microphone and the DC OUT jack supplies power to it.

55 Infrared beam window

56 BUILT-IN MIC (microphone) switch ㉕
Set to "WIND" when recording in a strong wind.

57 REC START/STOP button (for low-position recording) ㉘
Use this button instead of the START/STOP button for easier low-position recording.

Note (A-9)
When attaching a tripod other than Sony's, make sure that the length of the camera mounting screw is less than 6.5 mm. Otherwise, the screw may damage the inner parts of the camcorder.

For Service Manuals Contact
MAURITRON TECHNICAL SERVICES
8 Cherry Tree Rd, Chinnor
Oxon OX9 4QY
Tel:- 01844-351694 Fax:- 01844-352554
Email:- enquiries@mauritron.co.uk

(A-10)

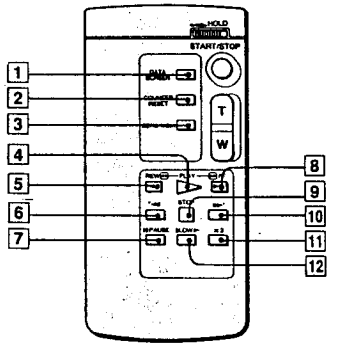

Wireless Remote Commander

You can play back a tape from a distance. The buttons on the Remote Commander with the same name or mark as those on the camcorder have the same function.

When you use the Commander
Be sure to set the REMOTE COMMANDER ON/OFF switch on the camcorder to "ON", and then start operation of the camcorder, with the Commander pointing towards the remote sensor. (See "Remotely controllable area" on page 10.)

(A-10)

1 DATA SCREEN button ㊺

2 COUNTER RESET button ㉗ ㊻

3 ZERO MEM (memory) button ㉗ ㊻

4 ▷ PLAY (playback) button ㊺

5 ◀◀ REW (rewind) button ㊺ ㊼

6 </◀II (reverse direction/reverse frame) button* ㊺

7 II PAUSE button ㊺

8 FF ▶▶ (fast-forward) button ㊺ ㊼

9 □ STOP button ㊺

10 >/II▶ (forward direction/forward frame) button ㊺

11 × 2 (double speed playback) button* ㊺

12 SLOW I▸ button ㊺

Note
The * indicates the functions which are operable only with the Commander.

Identifying the Parts

(A-11)

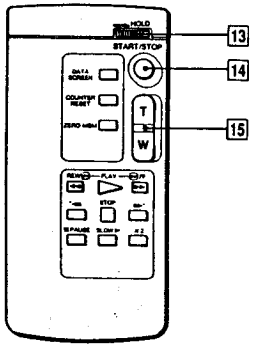

(A-12)

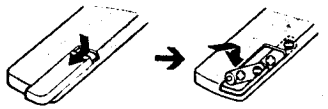

(A-13)

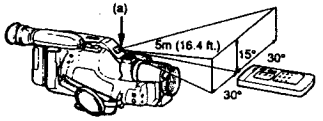

(A-11)

13 **HOLD switch**
Slide in the direction of the arrow to prevent the buttons from being accidentally pressed.

14 **START/STOP button**
Press to start and stop camera recording.

15 **Power zoom button** 16

Inserting batteries (A-12)
Insert two R6 (size AA) batteries with polarity positioned correctly.

Remotely controllable area (A-13)
Point the Commander towards the remote sensor (a).

Note on batteries
With normal operation, batteries will last for about six months. However, if the Commander will not be used for a long period, remove the batteries to avoid possible damage from battery leakage.

Notes on the Remote Commander

- Keep the remote sensor away from the strong light source such as direct sunlight or illumination. Remote control with the Commander may not be effective.
- Be sure that there is no obstacle between the remote sensor and Commander.
- The command mode of the Commander is VTR2. Avoid to use the Sony VTRs with the same command mode at the same time.
- Be sure to set R REMOTE COMMANDER ON/OFF on the camcorder to OFF when you connect the receiver of a remote control kit (not supplied) to the REMOTE control connector.

For Service Manuals Contact
MAURITRON TECHNICAL SERVICES
8 Cherry Tree Rd, Chinnor
Oxon OX9 4QY
Tel:- 01844-351694 Fax:- 01844-352554
Email:- enquiries@mauritron.co.uk

Connecting the Power Sources

First, Choose the Power Source.

Place	Power source	Accessory to be used
Outdoors	Battery pack	Battery pack NP-66 (supplied), NP-66H, NP-77H, NP-77 or NP-55
	Alkaline batteries	Battery case EBP-77 or EBP-55
Indoors	House current	AC power adaptor AC-V65A (supplied), AC-V30 or AC-V55
In the car	12V or 24V car battery	DC pack DCP-77, or AC power adaptor AC-V55 and car battery cord DCC-16AE

Note on power sources
Disconnecting the power source or removing the battery pack during recording or playback may damage the inserted tape. In this case supply the power again immediately.

Using the Battery Pack

Step 1

Charge the battery pack. (B-1)

(B-1)

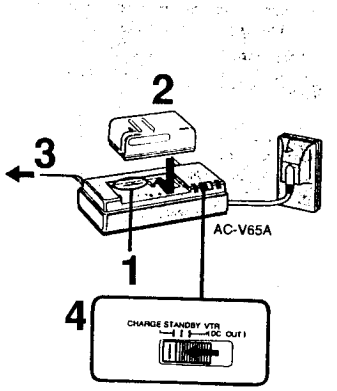

1 Align the groove on the battery pack with that on the AC power adaptor.

2 Slide in the battery pack to the right.

3 Connect the AC power adaptor to a wall outlet.

4 Set the CHARGE/VTR selector of the AC power adaptor to CHARGE.
Charging begins.

	NP-66 (supplied)	NP-66H	NP-77H	NP-77	NP-55
Required charging time	80	100	140	120	60

(approx. minutes using AC-V65A)

See the instruction manual of the AC power adaptor for details.

(B-2)

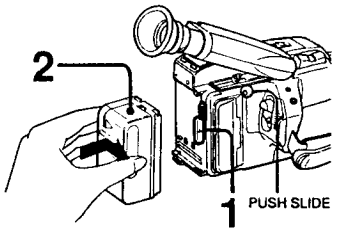

(B-3)

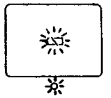

(B-4)

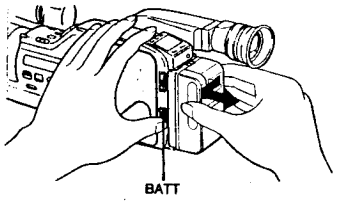

Connecting the Power Sources

Step 2

Mount the battery pack on the camcorder. (B-2)

1 Align the right side of the battery pack with the white line on the camcorder.

2 Slide in the battery pack to the right.

Notes:

- Make sure the battery fits completely on the mounting surface of the camcorder. Imperfect fit may damage the projections on the camcorder.
- If your nose touches the battery pack, adjust the position of the viewfinder by sliding it while pressing PUSH SLIDE.

Battery life

A fully charged battery pack lasts for:

	NP-66 (supplied)	NP-66H	NP-77H	NP-77	NP-55
Battery life	60	70	95	80	40

(approx. minutes, continuous recording indoors)

When the battery becomes weak, the ⌧ indication and red lamp blink in the viewfinder. **(B-3)** Also the camera recording/battery lamps on the camcorder blink. Replace the battery pack with a fully charged one.

To remove the battery pack (B-4)

Slide BATT up, and slide out the battery pack to the left.

Other options for charging

- AC-V55 AC power adaptor:
  You can charge two battery packs simultaneously.
- DC-V30 car battery charger:
  You can charge a battery pack by connecting the car battery charger to the cigarette lighter socket. This battery charger also supplies power to Sony 8 mm equipment that operates on a battery pack

If you have an NP-4000

You can use it for long outdoor recording.

(B-5)

1

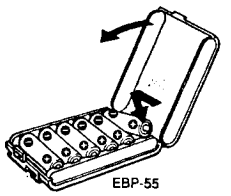

2

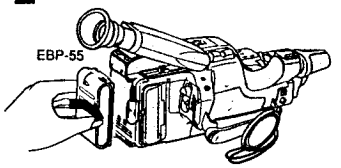

For Service Manuals Contact
MAURITRON TECHNICAL SERVICES
8 Cherry Tree Rd, Chinnor
Oxon OX9 4QY
Tel:- 01844-351694 Fax:- 01844-352554
Email:- enquiries@mauritron.co.uk

Connecting the Power Sources

Using Alkaline Batteries

(B-5)

The battery case EBP-55 or EBP-77 (not supplied) is required. And you need six R6 (size AA) alkaline batteries for EBP-55 and twelve for EBP-77.

Note:

You cannot use manganese batteries with the battery case.

1 Insert alkaline batteries into the battery case.

2 Attach the battery case in the same way as the battery pack.

Battery life (when using Sony alkaline batteries)

	EBP-77	EBP-55
Battery life	95	35

(approx. minutes, continuous recording indoors)

To remove the battery case

Remove it in the same way as you do with the battery pack. (See page 12.)

Notes on battery life

- Batteries will not last as long in cold places.
- No indication appears in the viewfinder to warn of a weak battery.

For Service Manuals Contact
MAURITRON TECHNICAL SERVICES
8 Cherry Tree Rd, Chinnor
Oxon OX9 4QY
Tel:- 01844-351694 Fax:- 01844-352554
Email:- enquiries@mauritron.co.uk

(B-6)

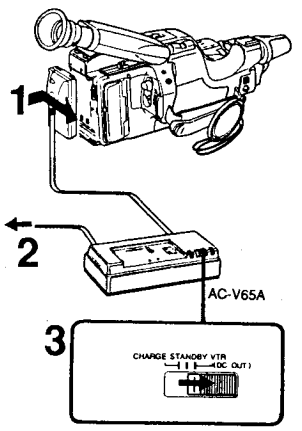

(B-7)

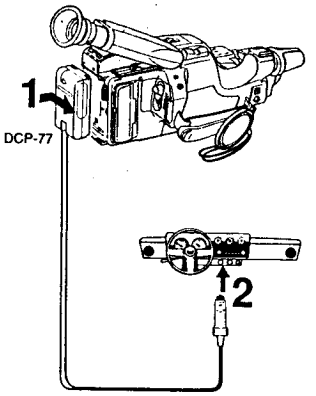

Connecting the Power Sources

Using House Current

(B-6)
Use the supplied AC-V65A AC power adaptor.

1 **Align the right side of the connecting plate with the line on the camcorder, and slide it in to the right.**

2 **Connect the AC power adaptor to a wall outlet.**

3 **Set the CHARGE/VTR selector of the AC power adaptor to VTR.**

See the instruction manual of the AC power adaptor for details.

To remove the connecting plate
Remove it in the same way as you do with the battery pack. (See page 12.)

Other options
You can also use the AC-V30 or AC-V55 AC power adaptor.

Using Car Battery

(B-7)
The DCP-77 DC pack is required (not supplied).

1 **Align the right side of the DC pack with the white line on the camcorder, and slide it in to the right.**

2 **Connect the cord of the DC pack to the cigarette lighter socket of a car (12 V or 24 V).**

To remove the DC pack
Remove it in the same way as you do with the battery pack. (See page 12.)

Other options
- You can also use the AC-V55 AC power adaptor and the DCC-16AE car battery cord to operate this camcorder on a 12 V or 24 V car battery.
- You can also use the DCP-55 DC pack to operate this camcorder on a 12 V or 24 V car battery.

(C-1)

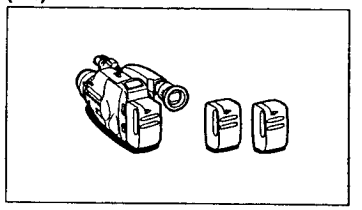

(C-2)

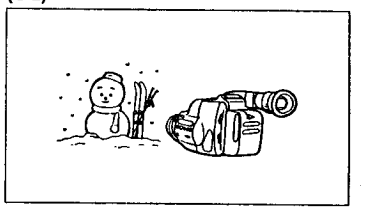

(C-3)

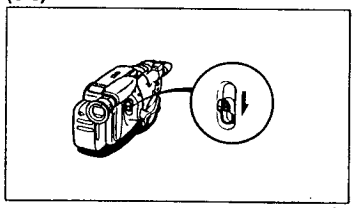

(C-4)

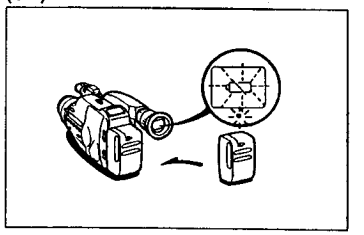

Using the Best out of the Battery Pack

How to Prepare the Rechargeable Battery Pack

Have sufficient battery pack power to do 2 or 3 times as much recording than you have planned. (C-1)
"Battery life" as indicated in the instruction manual or catalogue of the camcorder is measured by the continuous recording time of the camcorder, placed at a room temperature using a full-charged battery.

Battery life is shorter in a cold climate. (C-2)
Battery efficiency is decreased and the battery will be used up more quickly.

Turn the STANDBY switch of the camcorder off when not recording to save battery power. A smooth recording can be made even if recording is stopped and started again. (C-3)
While positioning the subject or selecting an angle, or looking through the viewfinder lens, the lens moves automatically and the battery is used. The battery is also used when a tape is inserted or removed.

When the Rechargeable Battery Pack Should Be Replaced

When the ⌧ mark and red lamp in the viewfinder change from slow blinking to rapid blinking while you are recording, (C-4)
Turn off the power switch of the camcorder and replace the battery pack. Leave the tape in the camcorder in order to obtain a smooth recording after the battery pack is replaced.

For Service Manuals Contact
MAURITRON TECHNICAL SERVICES
8 Cherry Tree Rd, Chinnor
Oxon OX9 4QY
Tel:- 01844-351694 Fax:- 01844-352554
Email:- enquiries@mauritron.co.uk

(C-5)

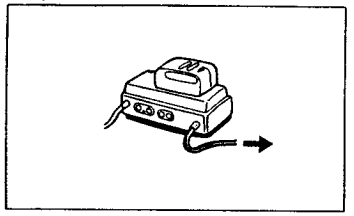

(C-6)

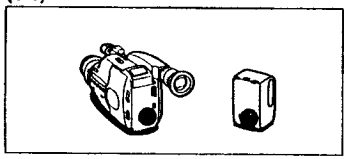

Notes on Charging

Before using the battery pack, charge it sufficiently. A brand new battery pack is not charged.

Recharge the battery pack only when it is exhausted. (C-5)

- If recording is completed before the ⌧ mark appears in the viewfinder, it is recommended that you remove the tape, set POWER to CAMERA, slide up STANDBY, and leave the camcorder until the ⌧ mark blinks rapidly.
- **Repeated charging while some capacity remains causes a lowering of battery capacity.**
  However, the original battery capacity can be recovered if you fully discharge and charge the battery again.

Recharge the battery pack before using.
If the battery pack is charged fully but not used for a long time (about 1 year), it becomes discharged.
Charge it again, but in this case the battery life will be shortened than normal. After several charging and discharging cycles, the battery life will recover its original capacity.

Keep the Terminals Clean

If the terminals (metal parts on the back) are not clean, the battery duration will be shortened. (C-6)
When the terminals are not clean or when the battery pack has not been used for a long time, install and remove the battery pack from time to time. This will improve the contact condition.
Also, wipe the + and – terminals with a soft cloth or paper.

(C-7)

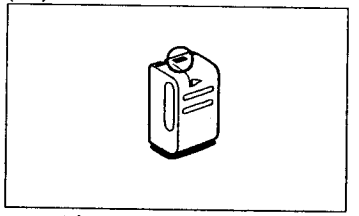

Notes on the Rechargeable Battery Pack

Why the battery pack heats up?
During charging or recording, the battery pack heats up. This means energy has been generated and chemical change has occurred inside the battery pack and this is not dangerous.

How to care for the battery pack

- Remove the battery pack from the camcorder after using it, and keep it in a cool place. When the battery pack is attached to the camcorder, a small amount of current flows to the camcorder even if the POWER switch is turned off. It causes overdischarging and shortens battery life.
- The battery pack is always discharging even when it is not in use after charging. Thus, it is recommended you charge the battery before using.

How to use the switch on the battery pack (C-7)
This switch is provided so that you can remember the charging condition. Set the switch to the "no mark" position when charging is completed. Set the switch to the "red mark" position when the battery is used up.

How many times can the battery pack be recharged ?
It can be fully charged and discharged about 500 times under normal temperatures.
If the ⌧ mark blinks rapidly just after turning on the camcorder with a fully charged battery pack, the battery pack should be replaced with a new fully charged one.

Temperatures during charging
Lower temperatures require a longer charging time. Charging under temperatures ranging from 10°C to 30°C is recommended.

Setting the Date and Time

Inserting the Lithium Battery

(D-1)

This camcorder uses a lithium battery to activate the clock and to keep a title and birth dates in camcorder's memory. Before operating it for the first time, install the supplied lithium battery.

1 Open the cover of the lithium battery compartment on the bottom.

2 Install the supplied CR2025 lithium battery with the + side facing out.

3 Close the cover.

To remove the lithium battery (D-2)
Press the side of the battery in the direction as indicated for installation.

Note on lithium battery life
The battery will last for approximately 1 year in normal operation.
When the lithium battery becomes weak, the ⚠ indication will blink on the viewfinder screen for about 5 seconds (when POWER is set to CAMERA) (D-3). In this case, **replace the battery with a Sony CR2025.**
Use of any other battery may present a risk of fire or explosion.
While replacing the lithium battery, keep the battery pack or other power source attached. Otherwise, readjustments of the date, time, title and birth dates are necessary.

Cautions

- Keep the lithium battery out of the reach of children. Should the battery be swallowed, immediately consult a doctor.
- Wipe the battery with a dry cloth to assure a good contact.
- Be sure to observe the correct polarity when installing the battery.
- Do not hold the battery with metallic tweezers, otherwise a short-circuit may occur.
- Battery may explode if mistreated. Do not recharge, disassemble or dispose of in fire.

(D-1)

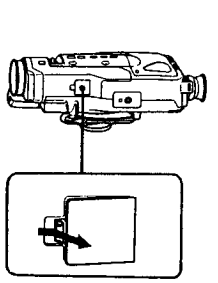

(D-2)

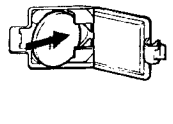

(D-3)

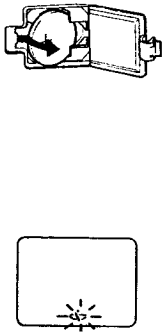

For Service Manuals Contact
MAURITRON TECHNICAL SERVICES
8 Cherry Tree Rd, Chinnor
Oxon OX9 4QY
Tel:- 01844-351694 Fax:- 01844-352554
Email:- enquiries@mauritron.co.uk

Setting the Date and Time

(D-4)

Make sure that a power source and lithium battery are attached.

1 Set POWER to CAMERA, and slide STANDBY up.

2 Press DATE (+) and TIME (NEXT) simultaneously for more than one and a half seconds until the date indication appears in the viewfinder.
DATE now functions as + (to advance numbers) and TIME functions as NEXT (to execute).

3 Adjust the year, month, day, hour and minute, in that order.
First adjust the blinking digits with +, and then press NEXT.

- When you keep DATE (+) pressed, the digits advance faster.
- The year starts at 1991, and proceeds as follows:
  1991 ---> 1999 → 2000 ---> 2020

4 Press NEXT to set the second.
The clock starts operating.

To correct date and time setting
Repeat steps 2 to 4.

To check the preset date and time
Press DATE or TIME. When you press the same button again, the indication goes off.

(D-4)

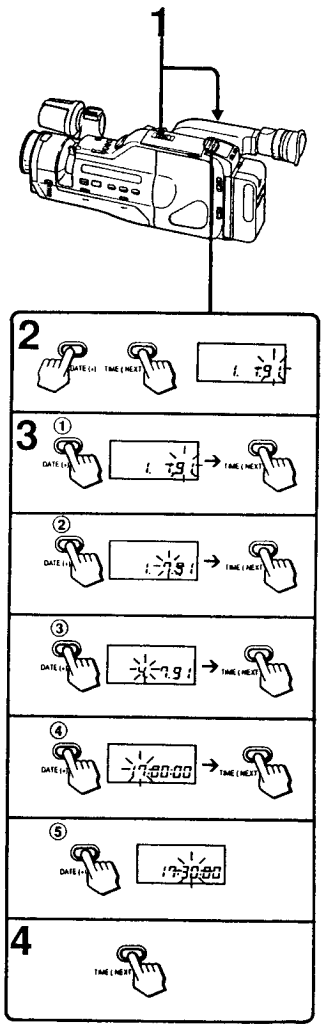

Inserting a Tape

(E-1)

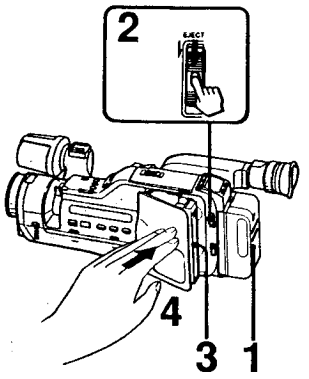

(E-2)

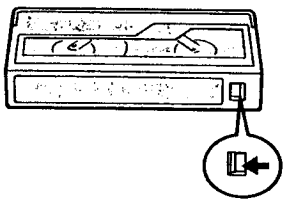

Inserting a Tape

(E-1)

1 **Make sure that a power source is connected.**

2 **While pressing the small blue button, push EJECT in the direction of the arrow.**
The cassette holder opens.

3 **Insert a tape with the window facing outside.**

4 **Press the PUSH mark to close the cassette holder.**

Ejecting the Tape

1 Make sure that a power source is connected.
2 While pressing the small blue button, push EJECT in the direction of the arrow.
3 Take out the tape and press the PUSH mark to close the cassette holder.

Preventing Accidental Erasure

(E-2)

Slide the tab on the cassette to expose the red mark. This will prevent accidental recording.
To re-record on this tape, slide the tab back out covering the red mark.
If you try to record with the red mark exposed, the ⊠ and ⏏ indications blink in the viewfinder and beeps sound for about 5 seconds.

Notes on handling tapes

- Never insert anything in the small holes on the rear of the cassette. These holes are used to sense the type of tape, thickness of tape, or if red mark is exposed or covered, etc.
- Store tapes in their cases and keep them in an upright position to prevent intrusion of dust and uneven winding.

— 15 —

For Service Manuals Contact
MAURITRON TECHNICAL SERVICES
8 Cherry Tree Rd, Chinnor
Oxon OX9 4QY
Tel:- 01844-351694 Fax:- 01844-352554
Email:- enquiries@mauritron.co.uk

Adjusting the Viewfinder Lens

(F)

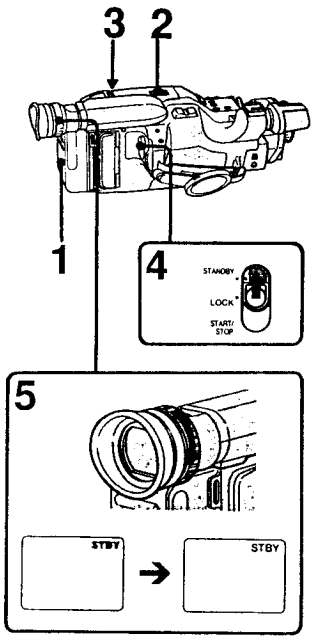

The position of the viewfinder lens for optimum vision varies depending on the person. Adjust when you use it for the first time, or when you use it after someone else did. **(F)**

1 **Make sure a power source is connected.**

2 **While pressing the green button, set POWER to CAMERA.**

3 **Insert a cassette.**

4 **Slide STANDBY up.**

5 **Turn the viewfinder lens adjustment ring so that the "STBY" displayed on the viewfinder screen comes into sharp focus.**

Recording a Picture Using Automatic Adjustments

(G-1)

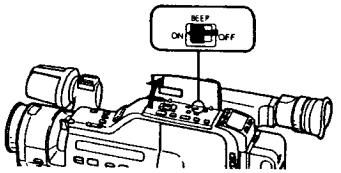

(G-2)

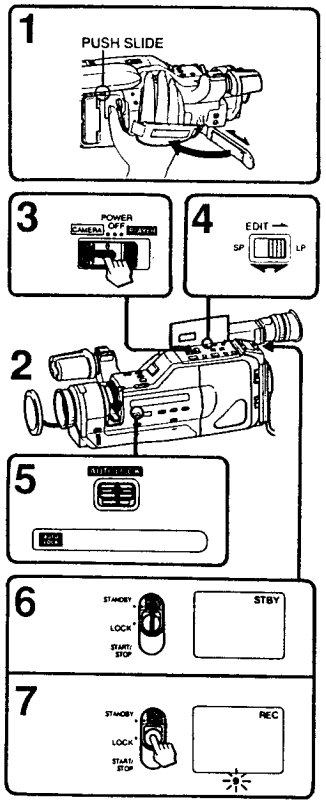

Before recording "once-only" events, we strongly recommend you make a trial recording and check that everything is working perfectly.

Start Recording

Make sure BEEP is set to ON. Beep will sound when you start and stop recording. **(G-1)**

(G-2)

1 **Hold the camcorder as in the figure.**
(Put your hand through the grip belt and make sure that your finger can easily touch START/STOP.)
If your nose touches the camcorder, press PUSH SLIDE and adjust the position and angle of the viewfinder.

2 **Remove the lens cap and attach it to the grip strap.**

3 **While pressing the green button, set POWER to CAMERA.**

4 **Set REC MODE to LP (long play) or SP (standard play), according to the length of your planned recording.**

5 **Set AUTO LOCK to the green position and turn the zoom lever downwards.**

6 **Slide STANDBY up.**
"STBY" appears in the viewfinder. The camcorder is now in standby mode.
Focus is adjusted automatically. Do not turn or stop the focus ring forcibly.

7 **Press START/STOP.**
A beep sounds. "REC" appears and the red lamp lights up in the viewfinder and the camera recording/battery lamps on the camcorder light . The camcorder is now recording.

To standby (to stop momentarily)
Press START/STOP again.
Two beeps sound and "STBY" appears in the viewfinder.

To stop
Slide STANDBY down and set POWER to OFF.

(G-3)

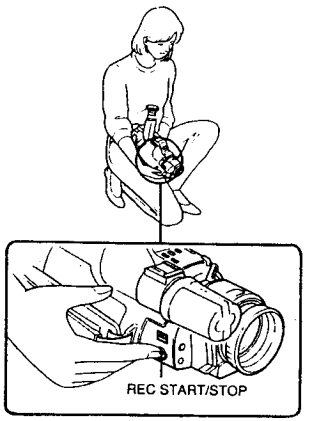

For low-position recording (G-3)
You can turn the viewfinder 90 degrees up.
Press REC START/STOP in front of the camcorder.
To stop recording, press it again.

About the sports finder
This camcorder is equipped with the sports finder. As the focul length of this finder is long, you can monitor the picture while being away from the eyecup.

Using the BEEP switch
Normally set BEEP to ON.
It beeps once when you start and twice when you stop recording. And it beeps several times as a warning, if any difficulty should arise during operation.
If you want to deactivate the beeps, set BEEP to OFF.

Notes
- Beeps are not recorded on the tape.
- For warning beeps, see the back cover.

If the tape reaches near the end during recording
The ⊠ indication in the viewfinder and the camera recording/battery lamps on the camcorder blink slowly.
When the tape reaches its end, blinking becomes rapid and beeps sound for about 5 seconds (if BEEP is set to ON).

Notes on recording
- To record from the beginning of the tape, run the beginning of the tape for about 15 seconds before recording. This will avoid missing the starting point when the tape is played back.
- When moving from indoors to outdoors, or vice versa, slide STANDBY up and point the camcorder at a white object for about 10 seconds so that the white balance is properly adjusted.

For Service Manuals Contact
MAURITRON TECHNICAL SERVICES
8 Cherry Tree Rd, Chinnor
Oxon OX9 4QY
Tel:- 01844-351694 Fax:- 01844-352554
Email:- enquiries@mauritron.co.uk

(G-4)

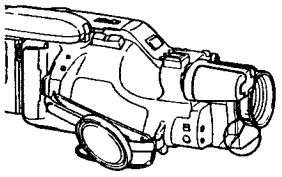

(G-5)

Recording a Picture Using Automatic Adjustments

Notes on automatic recording (G-4)

- During recording, do not cover the infrared beam window.
- Keep the lens and the infrared beam window clean.

Note on standby
If you leave the camcorder in standby mode for 5 minutes or more, the camcorder will be automatically turned off. To resume standby mode, slide STANDBY down once and slide it up again.

Note on the microphone
The microphone is fixed to the camcorder. Do not turn the microphone or hold the camcorder by the microphone. This may damage the camcorder.

Note on light sources
If you are shooting a subject in bright conditions just after shooting in a dark place, the picture may not appear in the viewfinder. In this case, point the camcorder to the other direction.

(G-5)

Auto focusing system of this camcorder
This camcorder adjusts focus automatically by emitting an infrared beam at the objects to be shot and then detecting the reflected beam. When the subject is approximately 3 meters (10 ft.) away from the camcorder, the focus is sharpest in the center of the screen. The camcorder has the tendency, however, to focus a bit lower to the right when the subject is within 3 meters, and a bit higher to the left when the subject is more than 3 meters away.

Recording mode
An 8 mm video format cassette records in the SP (standard play) mode and in the LP (long play) mode and can play back in the SP mode and LP mode.
The quality of the recording picture in the LP mode, however, will not be as good as that in the SP mode.

Note on PCM recording and playback
PCM recording or playback is not possible with this camcorder.
The PCM sound recorded or after-recorded with another video recorder cannot be played back with this camcorder.

(G-6)

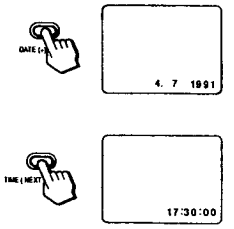

(G-7)

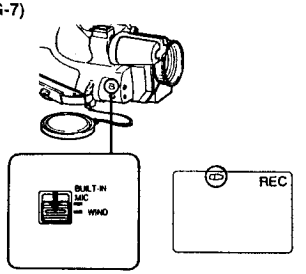

(G-8)

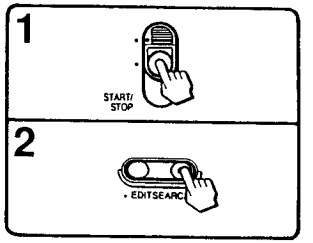

To Record the Date or Time

(G-6)

During camera recording or when in standby mode, press DATE for date indication or TIME for time indication.
The date or time displayed in the viewfinder is recorded with the picture.

To stop recording date or time
Press DATE or TIME again.
The picture recording continues.

When There is a Strong Wind

(G-7)

Set BUILT-IN MIC to WIND.
The noise from the wind will reduce.
After recording, set it to the upper position (green mark).

To Check the Last Portion of the Previous Recording

(G-8)

1 **Set the camcorder in standby mode by pressing the START/STOP button.**

2 **Press the – side of EDITSEARCH (⊖) momentarily.**
The last few seconds of the recorded portion are rewound and then the recorded picture appears in the viewfinder. After a few seconds of playback, the camcorder goes back to standby mode.

If the picture has not been recorded
The video heads may be contaminated. Clean the heads using the Sony V8-25CLH video head cleaning cassette or equivalent.

For Service Manuals Contact
MAURITRON TECHNICAL SERVICES
8 Cherry Tree Rd, Chinnor
Oxon OX9 4QY
Tel:- 01844-351694 Fax:- 01844-352554
Email:- enquiries@mauritron.co.uk

(G-9)

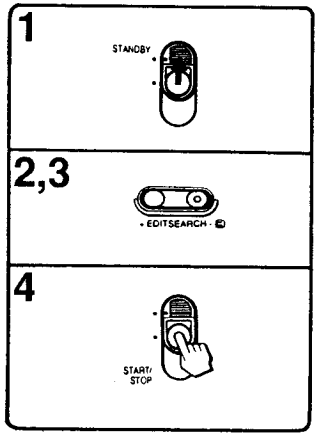

Recording a Picture Using Automatic Adjustments

To Re-record on a Previously Recorded Portion during Recording

(G-9)

1 **Slide STANDBY up.**

2 **Look in the viewfinder and find the point from where you want to begin the recording:**
Keep pressing the + side of EDITSEARCH to advance the picture at a normal playback speed, or the – side to reverse the picture.

3 **At the desired point, release EDITSEARCH.**

4 **Press START/STOP.**
A beep sounds and the recording begins.

To pause
Press START/STOP again.

To stop
Slide STANDBY down.

A smooth transition between scenes can be made even if STANDBY is slid down and slid up, or even if the power is turned off and on again, provided that the tape is not removed.

For Service Manuals Contact
MAURITRON TECHNICAL SERVICES
8 Cherry Tree Rd. Chinnor
Oxon OX9 4QY
Tel:- 01844-351694 Fax:- 01844-352554
Email:- enquiries@mauritron.co.uk

(G-10)

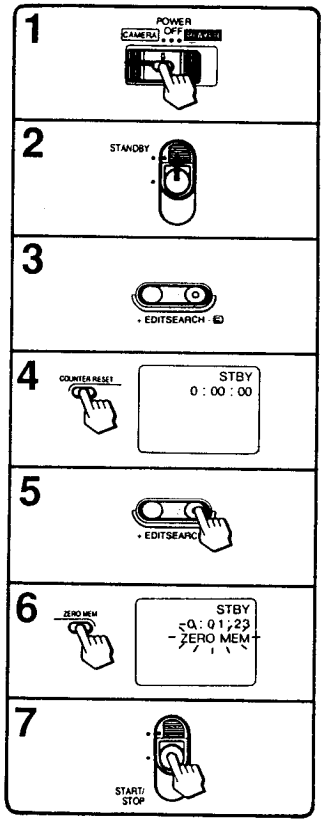

Recording a Picture Using Automatic Adjustments.

To Re-record a Picture in the Middle of a Recorded Tape (Insert Recording)

(G-10)

1 **While pressing the green button, set POWER to CAMERA.**

2 **Slide STANDBY up to set the camcorder to standby mode.**

3 **While looking in the viewfinder, keep pressing the + or – side of EDITSEARCH and release the button where you want to end the insertion.**
The camcorder is set to standby mode.

4 **Press COUNTER RESET.**
The counter is reset to zero.

5 **While looking in the viewfinder, keep pressing the – side of EDITSEARCH and release the button at the point where you want to start the insertion.**

6 **Press ZERO MEM.**
The insert ending point is stored in memory.

7 **Press START/STOP.**
A beep sounds and insert recording begins. The insert recording stops automatically near the counter zero point.

To cancel the ZERO MEM
Press ZERO MEM.

Note
The picture may be distorted at the ending point when played back.

(G-11)

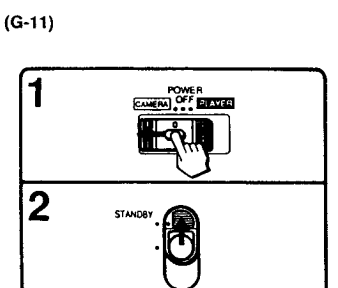

Recording a Picture Using Automatic Adjustments

Playing Back Your Picture Instantly

(G-11)

You can check the recorded picture in the viewfinder. However, you cannot monitor the sound.

1 **While pressing the green button, set POWER to CAMERA.**

2 **Slide STANDBY up.**

3 **Keep pressing the – side of EDITSEARCH to view the playback picture in reverse.**

4 **Keep pressing the + side of EDITSEARCH to view the playback picture.**

To stop playback, release EDITSEARCH.

To monitor the sound while viewing the playback picture in the viewfinder

1. Connect the headphones to the 🎧 jack.
2. While pressing the green button, set POWER to PLAYER.
3. Press ◀◀ to rewind the tape and press □ where you want to stop.
4. Press ▷ to start playback.

For Service Manuals Contact
MAURITRON TECHNICAL SERVICES
8 Cherry Tree Rd, Chinnor
Oxon OX9 4QY
Tel:- 01844-351694 Fax:- 01844-352554
Email:- enquiries@mauritron.co.uk

(H)

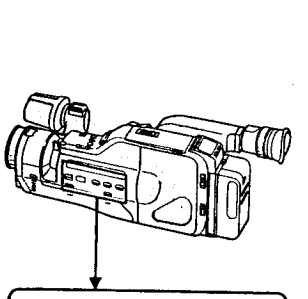

Selecting the Automatic/ Manual Adjustment

When you set AUTO LOCK to the green position, focus, white balance, and iris are adjusted automatically and the shutter speed is set to 1/50. The automatic function offers you worry-free operation under most shooting conditions. But under certain circumstances, manual adjustment is better for effective recording. For manual adjustment, set AUTO LOCK to the lower position and select an appropriate setting. **(H)**

To adjust each item manually, see the page as shown in the table.

Item	See page
Focus	30
White balance	32
Shutter speed	34
Back light	35

PROGRAM AE function:
In addition to the above items, when you use the PROGRAM AE (Auto Exposure) function under the manual mode, you can get a scene like a portrait or clear picture in the still and slow motion playback. (See pages 36 and 37.)

Push Auto:
During recording with manual focusing, as long as you keep this button pressed, autofocusing is activated.

When you attach the battery at the first time
The white balance, focus and iris are automatically adjusted and the shutter speed is set to normal speed (1/50) regardless of the position of AUTO LOCK.

Notes

- As long as you do not remove the battery, even if you set POWER to OFF, the previous settings are stored.
- If you set AUTO LOCK to the green position after you have made a manual adjustment and reset it to the lower position, the previous settings for manual adjustment will be later recalled.

(I-1)

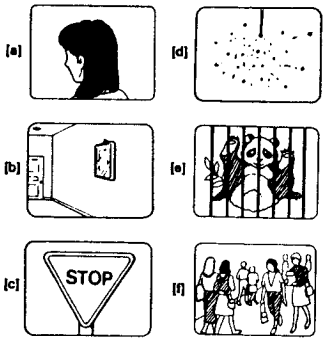

Manual Focusing

When you set AUTO LOCK to the green position, the autofocusing functions and you can easily get a focused picture under most shooting conditions. However manual focusing is recommended in the following cases.
[a] to [f] correspond to the illustrations. (I-1)

[a] Black objects which absorb the infrared beam
Ex. dark curtains or shade
[b] Objects in which the infrared reflection disperses
Ex. a smooth stanting surface (Autofocusing functions when the camcorder is aimed squarely at the subject.)
[c] Objects in which the infrared beam is reflected too much
Ex. traffic signs, a white wall, a mirror, or a subject through plate glass
[d] Objects not solid
Ex. fireworks, candle flame or smoke
[e] When there are other objects between the shooting object and this camcorder
Ex. an animal inside a cage or baby inside a cot
[f] Moving objects
Ex. a crowd or sports with lots of movement

- **Objects which emit infrared beams themselves**
  Ex. automatic doors, fluorescent lights, TV or VCR Remote Commander, or another Commander that uses an infrared beam for auto focusing.
- **Objects more than 20 meters (65 feet) away from the camcorder**
  Especially with an overcast day, or at night.

The autofocusing does not function momentarily in the following cases:
- When the camcorder is rapidly panned from a distant subject to a nearby subject.
- When you are shooting fast moving objects.

For Service Manuals Contact
MAURITRON TECHNICAL SERVICES
8 Cherry Tree Rd, Chinnor
Oxon OX9 4QY
Tel:- 01844-351694 Fax:- 01844-352554
Email:- enquiries@mauritron.co.uk

(I-2)

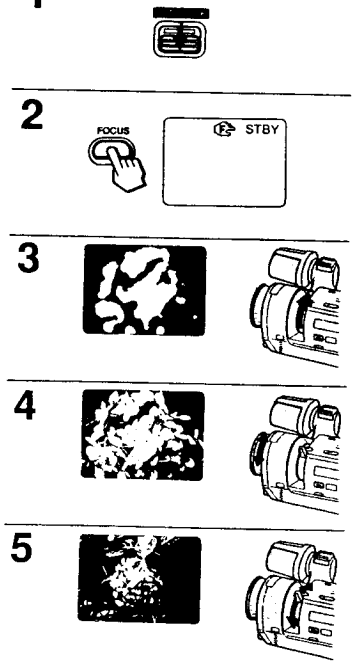

(I-3)

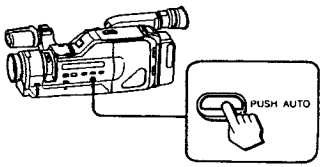

Focusing Manually

(I-2)

1 Set AUTO LOCK to the lower position.

2 Press FOCUS.
Make sure the MF (manual focusing) indication appears in the viewfinder.

3 Turn the manual zoom lever fully to the telephoto position.

4 Turn the focus ring to achieve sharp focus.

5 Set the desired shot length using the manual zoom lever.

Shooting with autofocusing momentarily (I-3)
While shooting with manual focusing, press PUSH AUTO. The autofocusing functions while you are pressing the button. When you release the button, manual focusing will be resumed. Use this button when you change the focus from one subject to another. The focusing performs naturally.
The previous settings except for focusing are retained.

Some helpful hints
- When shooting in relatively dark places such as indoors, the depth of field in proper focus is very shallow. For best results, shoot at wide angles after focusing in telephoto.
- When shooting a scene with lots of movement in bright light, set the zoom lever to the wide-angle position and the focus ring to 2 to 3 m (6.5 to 10 ft.).

Adjusting the White Balance

When you set AUTO LOCK to the green position, the auto white balance function of this camcorder adjusts the picture to natural colours under most shooting conditions. However, in the conditions listed below, adjust the white balance manually.
[a] to [f] correspond to the illustrations. (J-1)

(J-1)

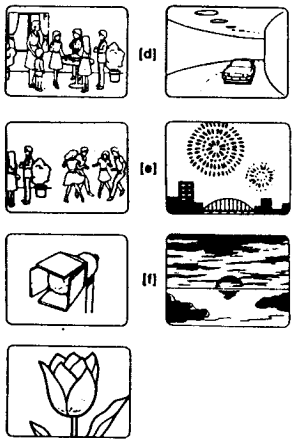

	Conditions	Indication in the viewfinder
[a]	Lighting conditions change quickly	☼
[b]	Too bright, such as in photograph studios	☼
[c]	Monochromatic subject or background	HOLD
[d]	Under a sodium lamp	☼
	Under a mercury lamp	
	Under a colour matching fluorescent lamp	
[e]	Recording outdoors: a night view, neon signs or fireworks	☀
[f]	Recording outdoors: scenes after sunset or before sunrise	

Adjusting the White Balance Manually

(J-2)

(J-2)

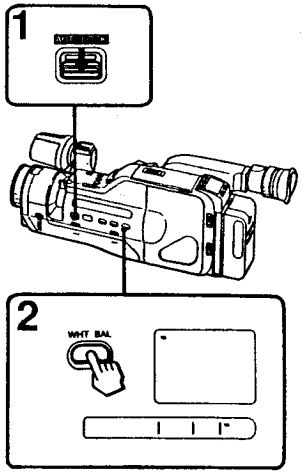

1 Set AUTO LOCK to the lower position.

2 Select the desired white balance mode by pressing WHT BAL.
Each time you press the button, the indication changes as follows.

→ No indication → HOLD → ☀ → ☼ →

Note on manual adjustment
When moving from indoors to outdoors, or vice versa, set AUTO LOCK to the green position and then reset to the lower position again.

What is the HOLD mode?
In the HOLD mode, the camcorder automatically adjusts to the colour temperature of the subject's light source and keeps that temperature during recording. When recording some subjects with different colour temperatures, use the HOLD mode to set a colour temperature and you can achieve a recording with natural colours without being affected by the surroundings.

To set into the HOLD mode
1 Set AUTO LOCK to the lower position and press WHT BAL to set to Auto (no indication).
2 Point at and record a white, flat object such as a white wall, or paper.
3 Press WHT BAL.
The HOLD mark appears in the viewfinder.

When you change the battery pack or the light source is changed, you need to set to the HOLD mode again. In this case, follow the procedures above again.

For Service Manuals Contact
MAURITRON TECHNICAL SERVICES
8 Cherry Tree Rd, Chinnor
Oxon OX9 4QY
Tel:- 01844-351694 Fax:- 01844-352554
Email:- enquiries@mauritron.co.uk

(K-1)

(K-2)

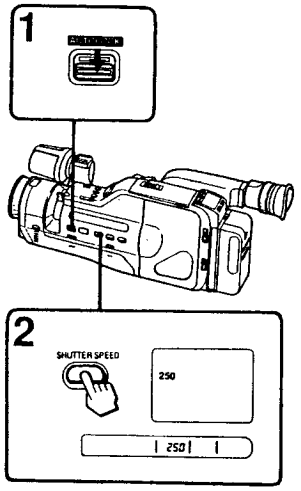

Setting Shutter Speed

(K-1)
When you record a fast-moving subject, increase the shutter speed so that you can see the clear picture in the playback pause mode.
Also, the depth of field in proper focus becomes shallow at a high shutter speed. This is effective to record the main subject in sharp focus and the surroundings of focus.
When recording at a high-speed shutter setting, record in a brighter place than usual.

Recommended setting for your situation

Example use	Recommended shutter speed
• On clear days, recording golf or tennis swing (To view the hit ball clearly in the still picture mode, set to 1/4000.) • Recording skiers	1/4000 or 1/2000
• On overcast days, recording a moving merry-go-round or roller coaster • Recording outdoors from inside a vehicle (for stable shooting)	1/1000 or 1/250
• Instead of the ND2 filter (To reduce the exposure level to about a half) • Recording indoor sports (for stable shooting)	1/120

Selecting the Shutter Speed

(K-2)

1 Set AUTO LOCK to the lower position.

2 Press SHUTTER SPEED repeatedly until the desired shutter speed indication appears.

Each time you press the button, the indication changes as follows.

→ No indication (1/50) → 120 (1/120) → 250 (1/250) → 1000(1/1000) → 2000(1/2000) → 4000 (1/4000) →

Notes

- When you select shutter speed 1/250 or faster, record under sunlight or use a video light.
- When you shoot a very bright subject at a faster shutter speed, a light vertical, belt-like line ("smear") may appear on the screen.
- When you record at certain shutter speeds under a light discharged tube, such as a fluorescent lamp, sodium lamp or mercury lamp, the brightness of the recorded picture may vary.

(L)

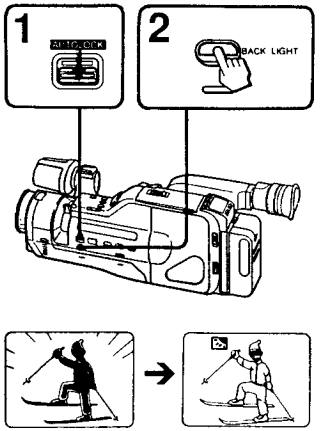

Shooting with Backlighting

In this camcorder, the iris is automatically controlled. However, when shooting a subject that is backlit, that is, if the light source is coming in from the back of the subject, use the BACK LIGHT button. (L)

1 Set AUTO LOCK to the lower position.

2 Press BACK LIGHT.
The ⊠ indication appears.

After shooting, be sure to release this adjustment condition by pressing BACK LIGHT again. (The ⊠ indication goes out.)
Otherwise, the recorded picture will become too bright.

For Service Manuals Contact
MAURITRON TECHNICAL SERVICES
8 Cherry Tree Rd, Chinnor
Oxon OX9 4QY
Tel:- 01844-351694 Fax:- 01844-352554
Email:- enquiries@mauritron.co.uk

Using the PROGRAM AE button

Using the Portrait Mode

(M-1)

(M-2)

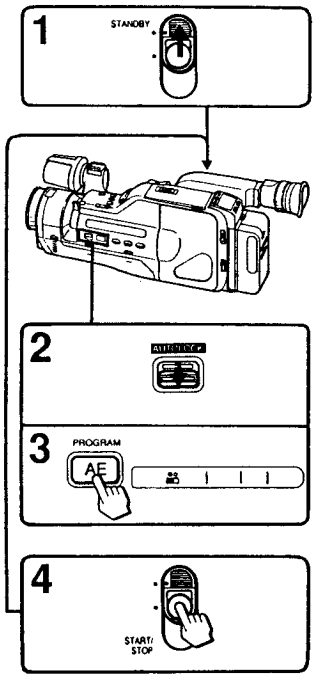

(M-1)
In the portrait mode, the object is in focus and the background is out of focus. The opening of the iris and the shutter speed is automatically adjusted to maintain the appropriate exposure according to the size and brightness of the object. The portrait mode is most effective to be used outdoors.

Use the portrait mode when shooting the following subjects:

- a still subject such as person or flower
- zooming in a subject in the telephoto mode
- subjects beyond obstacles such as net

How to set to portrait mode (M-2)

1 **Slide STANDBY up.**

2 **Set AUTO LOCK to the lower position.**

3 **Press PROGRAM AE until appears in the display window.**

4 **Press START/STOP.**
Recording with the portrait mode starts.

To resume the automatic mode
Press PROGRAM AE until neither nor appears in the display window or set AUTO LOCK to the green position.

Hint for effective camera work
Use of the portrait mode in the following method will gradually bring the background out of focus while keeping the object in focus.

1 Enter the portrait mode.
2 Set AUTO LOCK to the green position and start recording.
3 Set AUTO LOCK to the lower position. The camcorder will enter the portrait mode and bring the background out of focus.

Note
When recording under fluorescent, sodium, or mercury lamp, the brightness of the recorded picture may flicker, or the colour of the recorded picture may become unnatural.

(M-3)

(M-4)

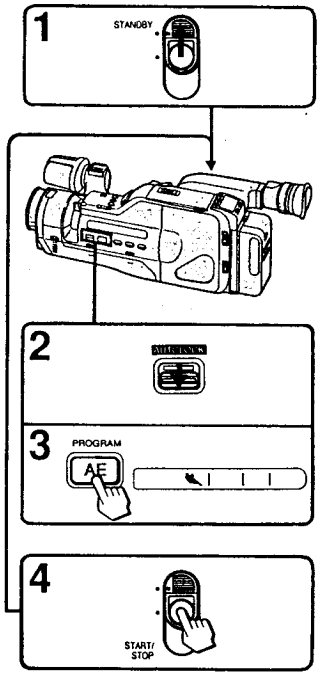

Using the Sports Mode

(M-3)
In the sports mode, the shutter speed and the opening of the iris are automatically adjusted to maintain the appropriate exposure according to the speed of the object. An object moving in high speed can be recorded and the picture can be observed more clearly with less picture shaking in the still or slow mode. The sports mode provides more effective recording than you can achieve by using SHUTTER SPEED.

You may want to use the sports mode when shooting the following subjects:

- outdoor sports scene such as football, tennis, or golf
- recording a landscape in the running car

How to set to sports mode (M-4)

1 **Slide STANDBY up.**

2 **Set AUTO LOCK to the lower position.**

3 **Press PROGRAM AE until appears in the display window.**

4 **Press START/STOP.**
Recording with the sports mode starts.

To resume the automatic mode
Press PROGRAM AE until neither nor appears in the display window or set AUTO LOCK to the green position.

Hint for effective camera work
When shooting athletic matches from a distant, such as a football game, we tend to zoom from the wide to the telephoto position to catch the once-only events. Even under these circumstances, by using the sports mode, a sharp picture can be obtained when played back later in the slow or still mode.

Notes

- The sports mode is effective under sufficient lighting, such as under sunlight. When used under extremely dark conditions, the shutter speed may not be shifted to high speeds.
- When recording under fluorescent, sodium, or mercury lamp, the brightness of the recorded picture may vary, or the colour of the recorded picture may become unnatural.

For Service Manuals Contact
MAURITRON TECHNICAL SERVICES
8 Cherry Tree Rd, Chinnor
Oxon OX9 4QY
Tel:- 01844-351694 Fax:- 01844-352554
Email:- enquiries@mauritron.co.uk

(N-1)

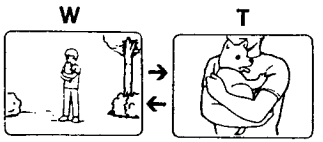

(N-2)

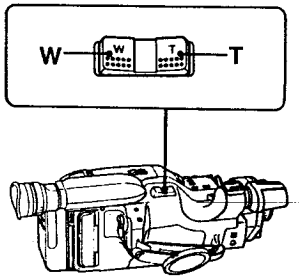

(N-3)

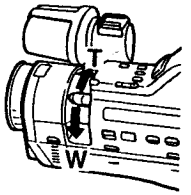

Zooming

You can change the size of the subject in the scene. Use "zoom-in" for dramatic close-ups. Use "zoom-out" for panoramic long shots. Also use zooming to focus manually or to decide the shooting angle. **(N-1)**

Power Zooming

— for smooth and constant zooming (N-2)

Press the T side of the power zoom button for telephoto (subject appears closer) and the W side for wide-angle (subject appears farther away).
The zooming speed is faster when the power zoom button is pressed firmly, and slower when the button is pressed lightly.

Zooming Manually

— for creating a dramatic effect (N-3)

Turn the manual zoom lever upward for telephoto and downward for wide-angle.

Focal length of this camcorder
The focal length is 8.5 mm to 85 mm. This means approximately 46 mm to 460 mm converted into the focal length of a 35-mm still camera.

(O-1)

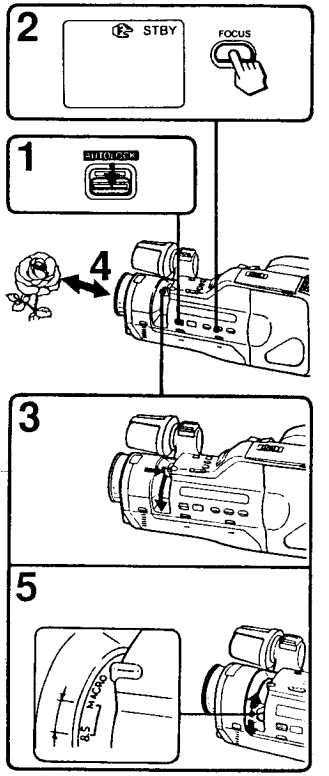

Close-up (Macro)

Even small subjects, such as flowers, insects, images in photographs, can literally fill the screen with macro shooting. **(O-1)**

1 **Set AUTO LOCK to the lower position.**

2 **Press FOCUS to set the manual focusing.**
The indication appears in the viewfinder.

3 **Turn the zoom lever to the MACRO position, pressing the green macro set button.**

4 **Bring the camcorder as close as necessary to obtain the desired size of image.**
The subject can be as close as a minimum of 10 mm (3/16 in.) from the lens surface.

5 **Turn the zoom lever within the MACRO range to focus sharply.**

Notes

- Autofocusing does not function in macro shooting.
- If the object is closer than 10 mm (3/16 in.), it cannot be brought in focus.

For Service Manuals Contact
MAURITRON TECHNICAL SERVICES
8 Cherry Tree Rd, Chinnor
Oxon OX9 4QY
Tel:- 01844-351694 Fax:- 01844-352554
Email:- enquiries@mauritron.co.uk

(O-2)

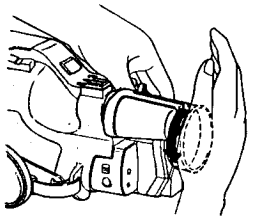

Close-up (Macro)

If the lens hood touches the subject
Remove the lens hood.
Hold the focus ring and turn the hood by pressing it with your palm. **(O-2)**
Do the same when attaching/removing an optional filter or conversion lens.

When you cannot come close to the object
You can record a close-up picture between 0.75 to 1.3 m (2.5 to 4 ft.) away from the object.
Turn the zoom lever to the telephoto end position (85).

Note
You need enought lighting to shoot a title card, etc. when you shoot indoors.

Recommended accessory
When shooting in macro, the depth of field is very shallow, so pay attention to focusing. To keep the subject in focus, use a tripod.

For Service Manuals Contact
MAURITRON TECHNICAL SERVICES
8 Cherry Tree Rd, Chinnor
Oxon OX9 4QY
Tel:- 01844-351694 Fax:- 01844-352554
Email:- enquiries@mauritron.co.uk

(P-1)

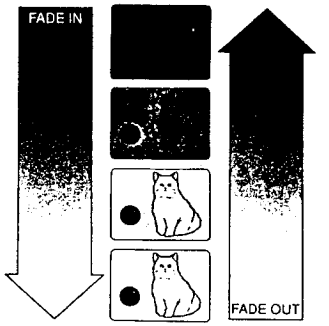

(P-2)

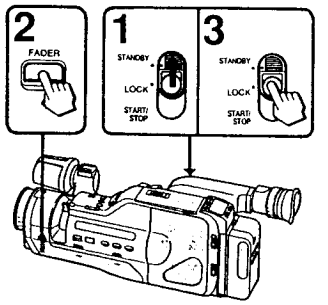

(P-3)

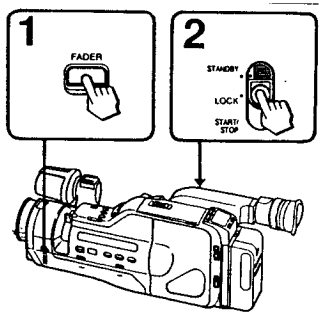

Fade-in and Fade-out

You can fade-in or fade-out to give your recording a professional appearance.
When fading-in, the picture will gradually appear from black. The sound will also gradually increase.
When fading-out, the picture will gradually fade to black. The sound will gradually decrease.
(P-1)

To Fade-in

(P-2)

1 **Slide STANDBY up to set the camcorder in the standby mode.**

2 **Press FADER.**

3 **Press START/STOP.**
Fade-in is performed and recording will start.

To Fade-out

(P-3)

1 **While recording, press FADER.**

2 **Press START/STOP to stop the recording.**
Fade-out is performed and then recording stops.

To cancel the fade-in/fade-out function
Before pressing START/STOP, press FADER again.

If you want to use the fade-in/fade-out function repeatedly
Start from step 1 each time.

When the title (page 42), date/time (page 25) or age (page 50) is displayed
The title, date/time or age does not fade-in or fade-out.

Superimposing a Title

(Q-1)

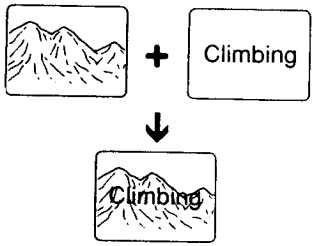

(Q-2)

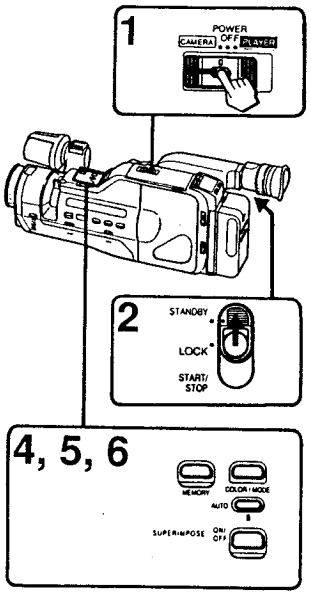

You can superimpose your own hand-written message or graphics (title) over the picture during recording or playback (editing). (Q-1)

Before recording, store a title.

Storing a Title (Q-2)

Before storing

- Make a desired title card.
  Use a plain, white card and draw a title with a dark colour in thick letters.
- You can choose from 8 colours for your title.
- Make sure the lithium battery is installed. (page 18)

How to store

1 **While pressing the green button, set POWER to CAMERA.**

2 **Slide STANDBY up to set the camcorder** in the standby mode.

3 **Point the camcorder to the title card and adjust the focus.**
To focus the subject, use the close-up function. (page 39)

4 **Press MEMORY to store the title.**

5 **Press COLOR/MODE and select the title colour.**
Each time you press the button, the indication changes as follows.
WHT (white) → BLUE → GRN (green) → CYAN → RED
↳ BLK (black) ← YEL (yellow) ← VIO (violet) ↵

6 **Press SUPERIMPOSE ON/OFF to turn off the title.**

To check the title
Press SUPERIMPOSE ON/OFF in the standby mode.
To turn off the title, press the button again.

(Q-3)

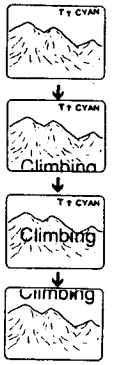

(Q-4)

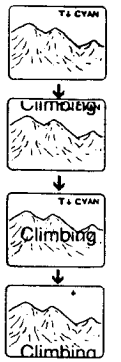

(Q-5)

(Q-6)

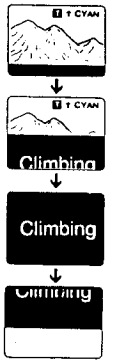

(Q-7)

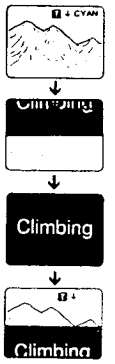

Various Display Modes of the Title

You can scroll your title up or down, or reverse the title.
Select the display mode of the title from the following table.

Display mode	Indication in the viewfinder
Scrolling up the title (Q-3) The title scrolls up and stops at the center.	↑
Scrolling down the title (Q-4) The title scrolls down and stops at the center.	↓
Reversing the title with the picture (Q-5)	T
Scrolling up the reversed title (Q-6)	T↑
Scrolling down the reversed title (Q-7)	T↓
Normal display mode	No indication
Auto-superimposing	⌊AUTO

Note on scrolling
You can scroll the title only when the camcorder is in the recording standby, recording, or normal playback mode. In the other modes (see "Playing Back a Tape" on page 56), you can select only reversing (T) or normal display mode. Also scrolling will be cancelled when you set the camcorder in the other modes after selecting scrolling.

About memory back-up
The camcorder uses the lithium battery on the bottom to keep the title in memory. The lithium battery life is approximately one year.

— 26 —

For Service Manuals Contact
MAURITRON TECHNICAL SERVICES
8 Cherry Tree Rd, Chinnor
Oxon OX9 4QY
Tel:- 01844-351694 Fax:- 01844-352554
Email:- enquiries@mauritron.co.uk

(Q-8)

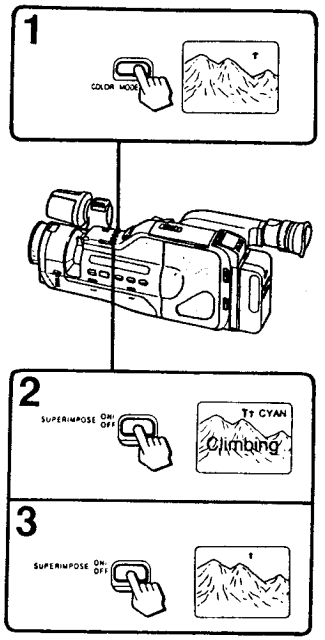

Superimposing a Title on Your Tape

The following shows how to superimpose a title using an example in which the title in cyan scrolls up. **(Q-8)**

1 Press COLOR/MODE to select the display mode of the title in the standby or playback pause mode.

2 Press SUPERIMPOSE ON/OFF at the point from which you want to insert the title in the standby mode, during recording, in the playback pause mode or during playback.
You can change the title colour by pressing COLOR/MODE.
Each time you press the button, the colour indication changes.

3 Wait for a while and press SUPERIMPOSE ON/OFF again.
The title goes out.

About the colour and the display mode indications
The colour and the display mode indications in the viewfinder are not recorded.

If you press EDITSEARCH in standby mode
The title goes out. After performing the editsearch or recording review function, the title appears again.

If you want to record the title during playback
Make connections for editing and record the title on another VTR. (See page 59.)

(Q-9)

Function of the COLOR/MODE button
This button has a double function: one is to select the title colour and the other is to select the title display mode.
Its function depends on if the title is displayed or not. **(Q-9)**

To select the colour
1 Press SUPERIMPOSE ON/OFF to display the title.
2 Press COLOR/MODE.
Each time you press the button, the colour indication changes as follows:

WHT (white) → BLUE → GRN (green) → CYAN → RED
↑ BLK (black) ← YEL (yellow) ← VIO (violet) ←

To select the display mode
1 If the title is displayed, press SUPERIMPOSE ON/OFF so that the title disappears.
2 Press COLOR/MODE.
Each time you press the button, the display mode indication changes as follows:

No indication (normal mode) → ↑
↑ ▯↓ ← ▯↑ ← ▯ ← ↓ ←

↑ : Title scroll up mode
↓ : Title scroll down mode
▯ : Title reverse mode
▯↑ : Title reverse and scroll up mode
▯↓ : Title reverse and scroll down mode

For Service Manuals Contact
MAURITRON TECHNICAL SERVICES
8 Cherry Tree Rd, Chinnor
Oxon OX9 4QY
Tel:- 01844-351694 Fax:- 01844-352554
Email:- enquiries@mauritron.co.uk

(Q-10)

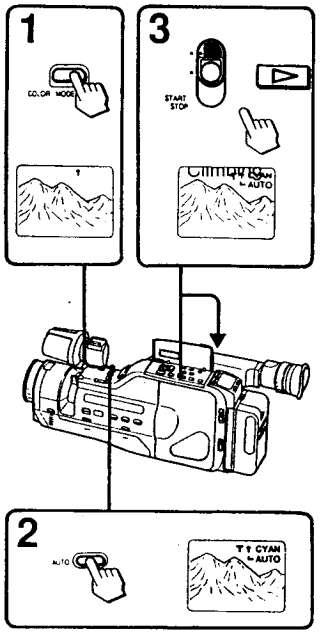

Superimposing a Title at the Beginning

You can clear the title automatically after displaying it for a few seconds. (Auto-superimposing) **(Q-10)**

1 **Press COLOR/MODE to select the display mode of the title in the standby or playback pause mode.**

2 **Press AUTO.**

3 **Start recording or playback.**
The title is displayed in the selected mode and disappears after a few seconds.

(Q-11)

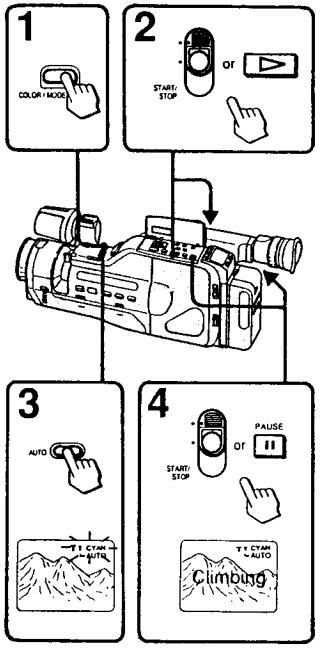

Superimposing a Title Before the Tape Stops

You can display the title automatically for a few seconds after you press START/STOP or ⏸ PAUSE to stop recording or playback. (Auto-superimposing) **(Q-11)**

1 **Press COLOR/MODE to select the display mode of the title in the standby or playback pause mode.**

2 **Start recording or playback.**

3 **Press AUTO.**

4 **Press START/STOP or ⏸ PAUSE at the point which you want to stop recording or playback.**
After the title is displayed for a few seconds, recording or playback stops.

The auto-superimposing is cancelled when:
- The auto-superimposing is performed once.
- You press AUTO again before the superimposing is performed.
- You perform other operations (e.g. editsearch or various speed playback) in the standby or playback pause mode.
- You press SUPERIMPOSE ON/OFF before superimposing is performed.

For Service Manuals Contact
MAURITRON TECHNICAL SERVICES
8 Cherry Tree Rd, Chinnor
Oxon OX9 4QY
Tel:- 01844-351694 Fax:- 01844-352554
Email:- enquiries@mauritron.co.uk

(R-1)

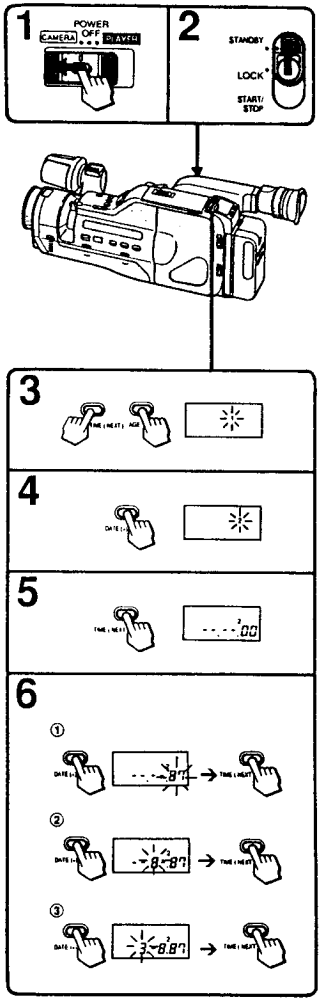

Recording the Age of Your Child

You can record the age (in years and months) of your child, by storing his/her birth date in your camcorder.
Once you store your child's date of birth, your child's age is automatically updated and displayed by pressing a single button. In this way, you can make a record of your child's development.
Besides age, you can also store the date of a specific event, and record how many years and months have passed since then.
You can record up to three ages or events.

Storing the Birth Date/Event Date

Before you begin
Before you store a birth date in your camcorder, make sure that power source is connected, that the lithium battery is installed and that the date is correctly set.

How to store (R-1)
Example: Store "3.8. 1987" in memory 2.

1 **Set POWER to CAMERA while pressing the green button.**

2 **Slide STANDBY up.**

3 **Press AGE and TIME (NEXT) simultaneously for more than one and a half seconds until the "1" indication blinks in the display window.**

4 **Press DATE (+) to select 2.**
Each time you press DATE (+), the indication in the display window changes as follows:

1 → 2 → 3

In the viewfinder, the indication changes as follows:

1 BIRTHDAY → 2 BIRTHDAY
↑ 3 EVENT ←

Although "EVENT" is displayed on 3, you can use it for age as well. You can also use 1 and 2 for event.

5 **Press TIME (NEXT).**
"--. --." appears.

6 **Enter the birth date.**
First adjust the blinking digits with DATE (+), and then press TIME (NEXT).
The age is displayed when all the items are adjusted.

For Service Manuals Contact
MAURITRON TECHNICAL SERVICES
8 Cherry Tree Rd, Chinnor
Oxon OX9 4QY
Tel:- 01844-351694 Fax:- 01844-352554
Email:- enquiries@mauritron.co.uk

If you missed the desired number with DATE (+)
Keep pressing DATE (+). The number changes as follows:

Year: 00 → 01 ---→ current year
↑ current year – (minus) 99 ←

Month: 1 → 2 ---→ 12 → --
↑

Day: 1 → 2 ---→ 31
↑

To correct/change the setting
Follow the procedure from step 1 again.

To advance the digits faster
Keep DATE (+) pressed.

To preset the year before 1900
1 After step 5 on the previous page, keep pressing DATE (+) until the current year is displayed.
2 Press DATE (+) again.
The year goes back 99 years.
(example: 1991 ➡ 1892)
3 Go to step 6.

When in 2000
"--.-- 01" is displayed in step 5 on the previous page.
After that, it advances every year as "1902, 1903, ...".

(R-2)

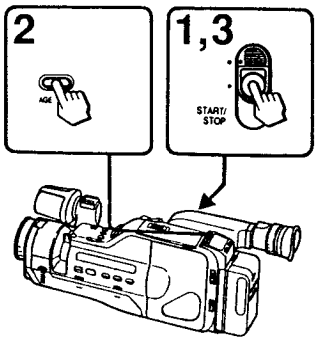

For Service Manuals Contact
MAURITRON TECHNICAL SERVICES
8 Cherry Tree Rd, Chinnor
Oxon OX9 4QY
Tel:- 01844-351694 Fax:- 01844-352554
Email:- enquiries@mauritron.co.uk

50

Recording the Age of Your Child

Recording the Age

You cannot add the age later during playback or editing. Be sure to follow the procedure below.
(R-2)

1 During recording, press START/STOP at the point where you want to insert the age indication.
The camcorder is set in the standby mode.

2 Press AGE to select the indication you want to record.
Each time you press AGE, the indication changes as follows:

No indication → [1] The first age
↑
[3] The third age ← [2] The second age ↵
An item with no presetting is skipped.
The [1], [2], or [3] indication goes out.

3 Press START/STOP.
Recording starts again.
The age displayed in the viewfinder is recorded with the picture.

To stop recording the age
Press AGE until the indication goes out.

To change the display while recording
Press AGE until the indication you want to record is displayed. Recording of the indication you selected starts when [1], [2], or [3] goes out.

To cancel the stored birth date/event date
1 Proceed steps 1 to 4 of "Storing the Birth Date/Event Date" on page 48 and select the item you want to cancel.
2 Press TIME (NEXT) twice.
"Month" blinks.
3 Press DATE (+) until "--" appears.
4 Press TIME (NEXT).
The birth date/event date is deleted from the memory and is not displayed when you press AGE.

Recording the Age of Your Child

About memory back-up
The camcorder uses the lithium battery on the bottom to keep the birth date/event date in memory. The lithium battery life is approximately 1 year.

When you connect the camcorder to a TV
If you do not use the data-screen function, the age indication will appear on the TV screen when the [1], [2], or [3] indication goes out in the viewfinder and recording starts.

51

(S-1)

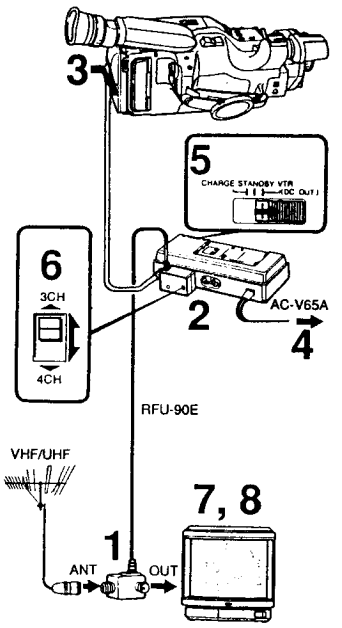

(S-2)

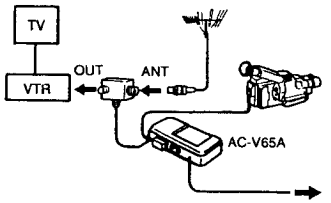

52

Connections for Playback

You can easily make a proper connection of the camcorder and TV by using the supplied AC-V65A AC power adaptor. Check the following connecting examples and go to the appropriate section to make the necessary connections.

You can also connect the camcorder directly to the TV, using the VIDEO/AUDIO (and RFU DC OUT) jacks.

Case 1: Connecting the camcorder directly to the TV without video/audio input jacks

Case 2: Connecting the camcorder directly to the TV with video/audio input jacks

Case 1: Connecting a TV without Video/Audio Input Jacks (S-1)

For the customers supplied with the RFU-90E

Before you begin
- Use the supplied RFU adaptor and AC power adaptor.
- Make sure that the TV is turned off.

How to connect
1 Connect the antenna and TV to the RFU adaptor.
2 Connect the RFU adaptor to the AC power adaptor.
3 Attach the connecting plate of the AC power adaptor to the camcorder.
4 Connect the AC power adaptor to a wall outlet.
5 Set CHARGE/VTR of the AC power adaptor to VTR.
6 Select the RF unit selector of the adaptor to 3CH or 4CH, whichever is not active in your area.
7 Turn on the TV and select the 0 position.
8 Tune the TV so that you can get picture and sound from the camcorder.

Usually keep the AC power adaptor, the RFU adaptor and the TV connected.

When you watch a TV programme
Set the CHARGE/VTR selector on the AC power adaptor to STANDBY or turn off the power of the camcorder.

If your TV is connected with a VTR (S-2)
Connect the camcorder to the VTR instead of the TV.

(S-3)

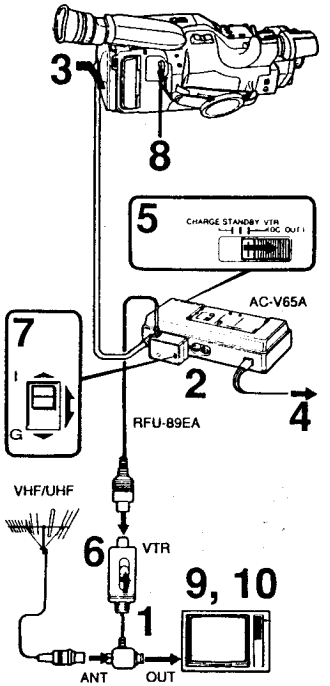

(S-4)

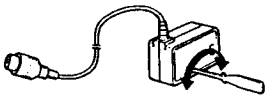

(S-5)

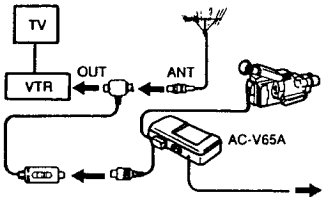

For the customers supplied with the RFU-89EA (S-3)

Before you begin

- Use the supplied RFU adaptor and AC power adaptor.
- Make sure that the TV is turned off.

How to connect

1 Connect the antenna and TV to the RFU adaptor.
2 Connect the RFU adaptor to the AC power adaptor.
3 Attach the connecting plate of the AC power adaptor to the camcorder.
4 Connect the AC power adaptor to a wall outlet.
5 Set CHARGE/VTR of the AC power adaptor to VTR.
6 Set the selector switch of the aerial selector to VTR.
7 Set the I/G selector of the RFU adaptor according to the TV system of your country.
8 Set POWER of the camcorder to CAMERA, insert a tape and slide STANDBY up.
9 Turn on the TV and select a programme position that is not used to receive a TV station.
10 Tune the TV so that you can get picture and sound from the camcorder.

When the playback picture is not free of disturbance

1 Set the selector switch of the aerial selector to ANT.
2 Select programme position on the TV between UHF channels 30 and 39, so that the TV shows no picture and a steady rustling sound or no sound is heard.
3 Set the selector switch of the aerial selector to VTR.
4 Turn the RF channel setting screw of the RFU adaptor slowly with the supplied screwdriver so that playback picture is clearly displayed on the TV screen. (S-4)

Usually keep the AC power adaptor, the RFU adaptor and the TV connected.

If your TV is connected with a VTR

Connect the camcorder to the VTR instead of the TV. (S-5)

(S-6)

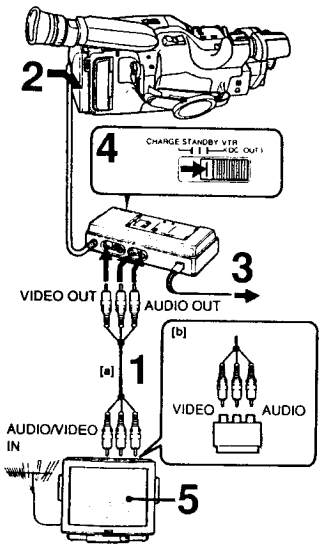

(S-7)

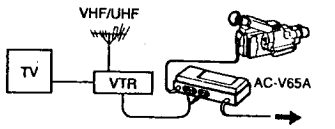

(S-8)

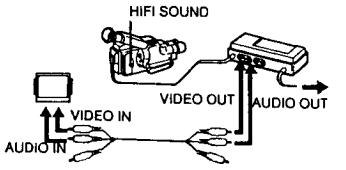

Case 2: Connecting a TV with Video/ Audio Input Jacks

(S-6)

Before you begin

- Use the supplied AC power adaptor and appropriate A/V connecting cable.
- Make sure that the TV is turned off.

How to connect

1 Connect the AC power adaptor to the TV.
[a] when your TV has phono type jacks
[b] when your TV has a 21-pin connector (EUROCONNECTOR)*
*Use the supplied plug adaptor.
2 Attach the connecting plate of the AC power adaptor to the camcorder.
3 Connect the AC power adaptor to a wall outlet.
4 Set CHARGE/VTR of the AC power adaptor to VTR.
5 Set the TV/VIDEO selector on the TV to VIDEO.

If your TV is connected with a VTR (S-7)

Connect the AC power adaptor to the VTR instead of the TV.

If your TV is a monaural type (S-8)

Connect the TV and the AC power adaptor as illustrated (The red plugs are free.). Be sure to set HIFI SOUND on the camcorder to ● or 1.
When your TV has a 21-pin connector, use the supplied plug adaptor in addition to the supplied A/V connecting cable.
You can connect the camcorder directly to the monaural TV.
Connect the supplied A/V connecting cable to the camcorder instead of the AC power adaptor.

For Service Manuals Contact
MAURITRON TECHNICAL SERVICES
8 Cherry Tree Rd, Chinnor
Oxon OX9 4QY
Tel:- 01844-351694 Fax:- 01844-352554
Email:- enquiries@mauritron.co.uk

(T-1)

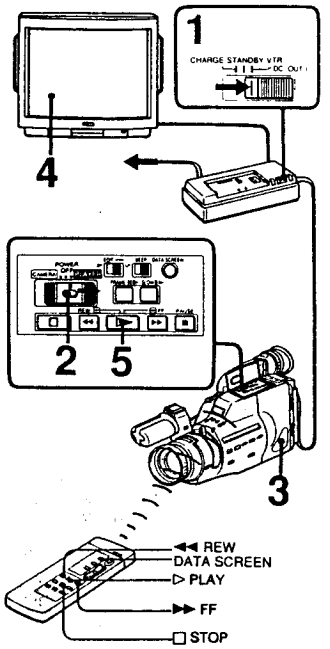

Playing Back a Tape

The supplied wireless Remote Commander is useful to control the camcorder from a distance. When using it, be sure to set the REMOTE COMMANDER ON/OFF switch to ON.

(T-1)

1 **Set CHARGE/VTR on the AC power adaptor to VTR.**

2 **Set POWER to PLAYER while pressing the green button.**

3 **Insert a tape.**

4 **Turn on the TV (or the VTR).**
- For a TV with video/audio input jacks, set the TV/VIDEO selector to VIDEO.
- For a TV without video/audio input jacks, select the programme position for playing back the camcorder.

5 **Press ▷.**
Playback begins.

To stop playback, press □.

To rewind the tape, press ◀◀.

To advance the tape rapidly, press ▶▶.

To display the same indications on the TV as in the viewfinder, press DATA SCREEN. To turn them off, press it again.

After playing back
Set POWER on the camcorder to OFF and CHARGE/VTR on the AC power adaptor to STANDBY.

(T-2)

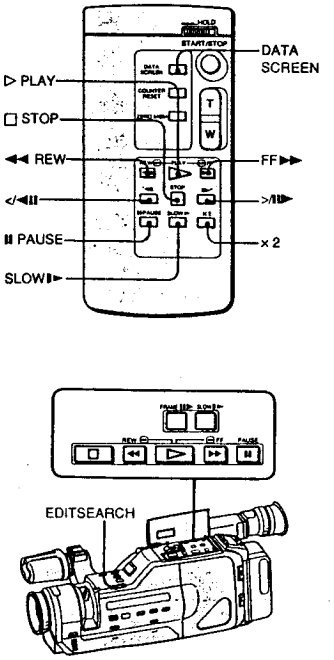

Various Playback Modes

(T-2)

To view the still picture (playback pause)
Press II PAUSE during playback.
II appears in the viewfinder.
To resume normal playback, press ▷ or II.
Note:
When the still picture mode lasts for 5 minutes or more, the camcorder automatically enters the stop mode.

To change the playback direction
Press </◀II for the reverse or >/II▶ for the forward direction during playback. >/II▶ on the camcorder is only for the forward direction.
–x1 or x1 appears in the viewfinder.

To view the picture at 1/5 speed (slow playback)
Select the playback direction with </◀II or >/II▶, and then press SLOW I▶ during playback.
SLOW I▶ on the camcorder is only for the forward direction.
◀I or I▶ appears in the viewfinder.
To resume normal playback, press ▷.
Note:
When slow playback lasts for 1 minute or more, the forward or reverse playback at the normal speed starts automatically, depending on the tape direction.

To view the picture at double speed (only on the Commander)
Select the playback direction with </◀II or >/II▶, and then press x2 on the Commander.
–x2 or x2 appears in the viewfinder.
To resume normal playback, press ▷.

To view the picture frame-by-frame
In the still picture mode, press </◀II or >/II▶. Each time you press the button, the picture appears by a frame.
II▶ on the camcorder is only for the forward direction. ◀II or II▶ appears in the viewfinder.
If you keep pressing ◀II/II▶, playback at 1/25 speed starts.
To resume normal playback, press ▷.

For Service Manuals Contact
MAURITRON TECHNICAL SERVICES
8 Cherry Tree Rd, Chinnor
Oxon OX9 4QY
Tel:- 01844-351694 Fax:- 01844-352554
Email:- enquiries@mauritron.co.uk

For Service Manuals Contact
MAURITRON TECHNICAL SERVICES
8 Cherry Tree Rd, Chinnor
Oxon OX9 4QY
Tel:- 01844-351694 Fax:- 01844-352554
Email:- enquiries@mauritron.co.uk

(T-3)

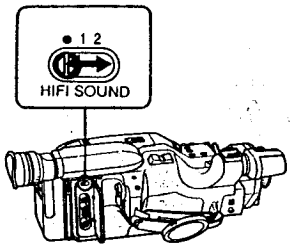

Playing Back a Tape

To locate the desired scene (picture search)
Keep pressing ◀◀ or ▶▶ during playback or in the still picture mode. ⊖ or ⊖ appears in the viewfinder.
To resume normal playback, release the button.

To locate the desired scene quickly (skip scan)
Press ◀◀ during rewinding or ▶▶ during advancing the tape rapidly. ⊖ or ⊖ appears in the viewfinder.
To resume normal playback, press ▷.

About the playback sound
In the various playback modes, streaks appear. The sound can be heard during playback at double speed in forward direction, but may not be clear as normal speed playback.

If the still picture, frame-by-frame picture, or slow playback picture is noisy
Set the camcorder in slow playback mode, and press the + or – side of EDITSEARCH until the least noisy picture appears.

Note
Streaks appear in the still picture. They are wider when playing back an SP-recorded tape.

Playing Back the Dual Sound Recorded Tape

(T-3)

Normally set HIFI SOUND to ● position.
When the dual sound recorded tape is played back, set HIFI SOUND to the desired sound, 1 or 2.

Note
When you connect the TV using the RFU adaptor, or when the TV or VTR is a monaural type, set HIFI SOUND to 1 or 2.

(U)

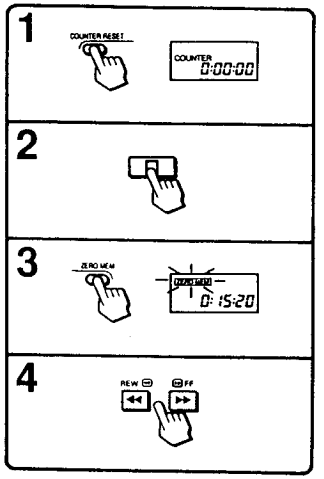

Using the Tape Counter

During recording or playback, the digits on the counter indicate the actual recording or playback time.

To Index the Whole Tape

Press COUNTER RESET at the beginning of the tape so that the counter shows "0:00:00". Write down the counter reading at a particular point so that you can easily find that point later by referring to the tape counter.

To Return to a Pre-registered Point

(U)

1 **During playback, press COUNTER RESET at the point you later want to locate. The counter shows "0:00:00".**

2 **Press □ when the playback has finished, as usual.**

3 **Press ZERO MEM.**
The "ZERO MEM" indicator blinks in the viewfinder.

4 **Press ◀◀ or ▶▶.**
The tape rewinds or advances and stops automatically when the counter reaches approximately zero.

Notes on the tape counter and ZERO MEM button

- The counter reading and the point of the tape may not correspond exactly. Use the counter as a guide. There will be a time lag of several seconds especially when you repeat fast-forward running/rewinding and play back the tape recorded in LP and SP modes mixed.
- Be sure to press ZERO MEM after you stop the tape. It does not function during playback.
- The ZERO MEM mode is cancelled automatically once the tape is rewound or sent forward to the point where you pre-registered.

For Service Manuals Contact
MAURITRON TECHNICAL SERVICES
8 Cherry Tree Rd, Chinnor
Oxon OX9 4QY
Tel: 01844-351694 Fax: 01844-352554
Email: enquiries@mauritron.co.uk

(V)

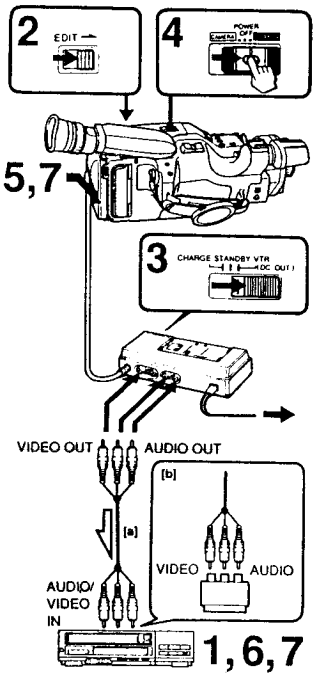

Editing onto Another VTR

You can create your own video programme by editing with any other 8 8-mm, Betamax or VHS VHS format VTR. You can also superimpose and record the titles during editing.

Before You Begin

- Make connections using the supplied A/V connecting cable [a], or A/V connecting cable and plug adaptor (supplied) [b].
  [a] when your VTR has phono type jacks
  [b] when your VTR has a 21-pin connector (EUROCONNECTOR).
- Set the input selector of the VTR to LINE, if available.

Operation

(V)

1 Insert a tape to be recorded on into the recording VTR.
2 Set EDIT on the camcorder to the direction of the arrow (EDIT ON).
3 Set CHARGE/VTR on the AC power adaptor to VTR.
4 Set POWER of the camcorder to PLAYER and insert your recorded tape.
5 Play back on the camcorder and locate the point where you wish to start editing and set the camcorder to the playback pause mode.
6 On the recording VTR, locate the recording starting point and set the VTR to the recording pause mode.
7 Press II of both VTRs simultaneously to start editing.

To edit more scenes, repeat steps 5 to 7.
To stop editing momentarily, press II on the recording VTR.
To stop editing, press □ on both VTRs.

Use of the EDIT switch
When you set EDIT to the direction of the arrow (EDIT ON), picture and sound deteriorations resulting from editing can be kept to the minimum. Avoid using the edited tape for multiple generations of editing. After editing, be sure to set this switch in the opposite direction of the arrow (EDIT OFF).

If you use the DATA SCREEN function
You can record the indications displayed on the TV screen.

(W-1)

(W-2)

Hints for Better Shooting

Getting Stable Pictures

Take a good posture for shooting (W-1)
For hand-held shots, it is important to hold the camcorder properly.

- Hold the camcorder firmly and secure it with the grip belt so that you can easily manipulate the camcorder with your thumb.
- Place your right elbow firmly against your side.
- Place your left hand under the camcorder to support it. When adjusting the focus manually, make sure the camcorder does not move.
- Place your eye firmly against the viewfinder eyecup.
- Do not cover the infrared beam window.

Use a tripod
If you have a tripod for a still camera, you can also use it with the camcorder. If a tripod is not available, try placing the camcorder on a tabletop or any other flat surface of suitable height.

Keep the horizontal plane level (W-2)
The horizontal plane can be easily determined by using the viewfinder frame as a reference.

Planning Ahead

If you are going to edit the tape after recording
Shoot the scene a little longer to make the editing easier.

If you are not going to edit the tape after recording
First record a title and then use the START/STOP button to make a smooth recording.

For Service Manuals Contact
MAURITRON TECHNICAL SERVICES
8 Cherry Tree Rd, Chinnor
Oxon OX9 4QY
Tel:- 01844-351694 Fax:- 01844-352554
Email:- enquiries@mauritron.co.uk

Hints for Better Shooting

Lighting

Shoot with the sun behind you
When the light source is behind the subject, or in the following situations, the subject will be recorded too dark and the background too light.

- The subject is indoors and there is a window behind the subject.
- Bright sources such as fluorescent or incandescent lamps are included in the scene.
- You are shooting a person wearing white or shiny clothes in front of a white background.
  In this case, the face will be recorded too dark.

Use video lights in the dark
To get the best colours, a sufficient light level must be maintained.
Photography lamps or halogen lamps are recommended. For best results, use of Sony video lights are recommended since their weight and low heat output levels allow safe, direct connection to the camcorder.
For detailed instructions on proper use of the light, read its instruction manual.

Brightness levels
Using the following chart as a reference, take a few minutes to familiarize yourself with brightness levels to improve your recording technique.

Situation	Brightness	Condition
Snow-covered mountains Snow fields Sandy beach, clear day in summer	Unit: lux	ND filter recommended
Clear day, mid day (100,000 lux) Clear day, mid-afternoon (35,000) Overcast day, mid-day (32,000)	100,000 10,000	Normal recording
Overcast day, one hour after sunrise (2,000) Office lit by fluorescent lamps, near window (1,000) Clear day, one hour before sunset (1,000) Department store counter (500 – 700) Station wicket (650) Office lit by fluorescent lamps (400 – 500) Room lit by two 30 W fluorescent lamps (300) Subway station platform (300) Arcade at night (150 – 200)	1,000 500 300	
Theater lobby (15 – 35) Candlelight (10 – 15)	100 10	Video light recommended

(X-1)

(X-2)

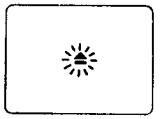

Notes and Precautions

Notes on Moisture Condensation

If the camcorder is brought directly from a cold place to a warm place, moisture may condense inside the camcorder, on the surface of the tape or on the lens. In this condition, the tape may stick to the head drum and be damaged or the unit may not operate correctly. To prevent possible damage under these circumstances, the camcorder is furnished with moisture sensors. However, take the following precautions.

If moisture condenses inside the unit

(X-1)
Moisture is present inside the camcorder when:

- The ♦ indication in the viewfinder blinks.
  When the tape is inserted, the ⏏ indication also blinks.
- Beeps sound continuously for about 5 seconds when the BEEP switch is set to ON.

In such cases, no function except for tape ejection will work.
Eject the tape, turn off the camcorder, and leave it with the cassette holder open for at least 1 hour.
The camcorder can be used again if the ♦ indication does not appear when the power is turned on again.

If moisture condenses on the surface of the tape

(X-2)
Moisture is present on the surface of the tape when:

- The ⏏ indication blinks inside the viewfinder when the tape is inserted and a tape transport button (▷, ◀◀ etc.) is pressed.
- Beeps sound continuously for about 5 seconds when the BEEP switch is set to ON.

In such cases, no function except for tape ejection will work.
Eject the tape and let it sit for at least 1 hour.
The tape can be used again if the ⏏ indication does not appear when the tape is inserted and a tape transport button is pressed.

If moisture condenses on the lens

No caution indications will appear, but the picture becomes dim.
Turn off the power and leave the camcorder unused for at least 1 hour.

Notes on Video Head Cleaning

(Y)

To ensure clear picture, clean the video heads periodically.

When playback pictures are noisy or hardly visible, the video heads may be contaminated.

[a] Slight contamination

[b] Critical contamination

In such cases,

1 Clean the video heads with the Sony V8-25CLH cleaning cassette (not supplied), referring to its instructions.

2 After cleaning, check if the picture is clear by recording or playing back with an ordinary tape.

3 If the picture is still noisy, repeat cleaning. (Do not repeat cleaning more than 5 times.)

Caution

Do not use a commercially available wet-type cleaning cassette. It may damage the video heads.

Note

If the V8-25CLH cleaning cassette is not available in your area, consult your Sony service facility.

Precautions

On operation

- Operate the camcorder on 6.0V (battery pack), 7.5V (AC power adaptor), or 9.0V (alkaline batteries).
- For DC or AC operation, use the accessories recommended in this manual.
- Should any solid object or liquid fall into the casing, unplug the camcorder and have it checked by qualified personnel before operating it any further.

For Service Manuals Contact
MAURITRON TECHNICAL SERVICES
8 Cherry Tree Rd, Chinnor
Oxon OX9 4QY
Tel:- 01844-351694 Fax:- 01844-352554
Email:- enquiries@mauritron.co.uk

- Do not hold the camcorder by the viewfinder or the microphone.
- Avoid rough handling or mechanical shock. Be particularly careful of the lens.
- Keep the lens cap on the lens when not using the camera.
- Do not wrap up the camcorder and operate it because heat may build up internally.
- Keep the camcorder away from strong magnetic fields or mechanical vibration.
- **Do not let sand get into the camcorder**
  When you use the camcorder on a sandy beach or dusty place, protect it from the sand or dust. Sand or dust may cause the unit to malfunction and sometimes the malfunction cannot be repaired.
- **Do not let the camcorder get wet**
  Keep the camcorder from rain or sea water. It may cause malfunction and sometimes the malfunction cannot be repaired.

On care

- When the unit will not be used for a long time, periodically turn on the power, operate the camera section and player section and play back a tape for about 3 minutes.
- Clean the lens with a soft brush to remove dust. If there are fingerprints on it, remove them with a soft cloth.
  Clean the camcorder body with a dry, soft cloth, or a soft cloth lightly moistened with a mild detergent solution. Do not use any type of solvent which may damage the finish.

Note on copyright

Television programmes, films, video tapes and other materials may be copyrighted. Unauthorized recording of such materials may be contrary to the provision of the copyright laws.

Using Your Camcorder Abroad

Each country has its own electricity system and TV colour system. Before using your camcorder abroad, check the following points.

Power Sources

You can use your camcorder in any country with the supplied AC power adaptor within 110V to 240V AC, 50/60 Hz.

Differences in colour systems

You can view the playback picture in the viewfinder. However, if you want to view the playback picture on a TV, it must be a PAL system based TV and should have video/audio inputs.

PAL system countries
Australia, Austria, Belgium, China, Denmark, Finland, Germany (Former West Germany), Great Britain, Holland, Hong Kong, Italy, Kuwait, New Zealand, Norway, Portugal, Singapore, Spain, Sweden, Switzerland, Thailand, etc.

PAL-M system country
Brazil

PAL-N system countries
Argentina, Paraguay, Uruguay

NTSC system countries
Bahama Islands, Canada, Central America, Japan, Korea, Mexico, Taiwan, The Philippines, U.S.A., etc.

SECAM system countries
Bulgaria, France, Hungary, Iran, Iraq, Monaco, Poland, The Soviet Union, etc.

SECTION 2
DISASSEMBLY

2-1. REMOVAL OF CASSETTE LID ASSEMBLY

Note: When mounting, fit the two clicks ❸ into holes completely, then clamp two screws ❶.

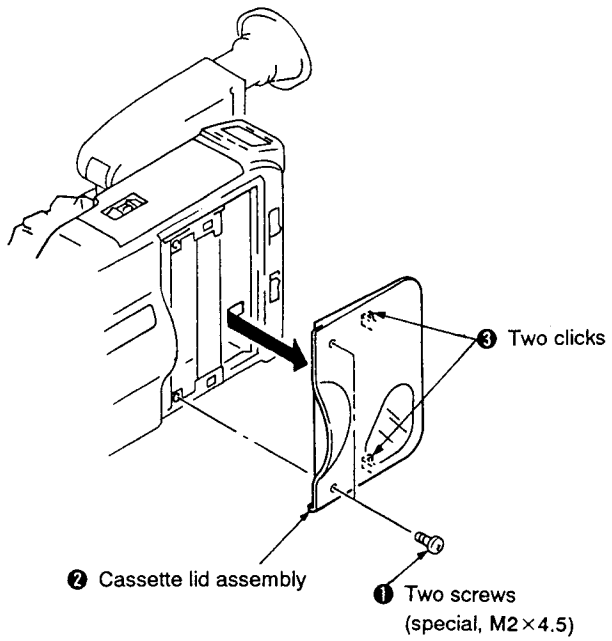

2-2. REMOVAL OF CABINET (UPPER) ASSEMBLY

Note: When mounting, gather up RECORDING button ❾ in the direction of arrow Ⓒ.

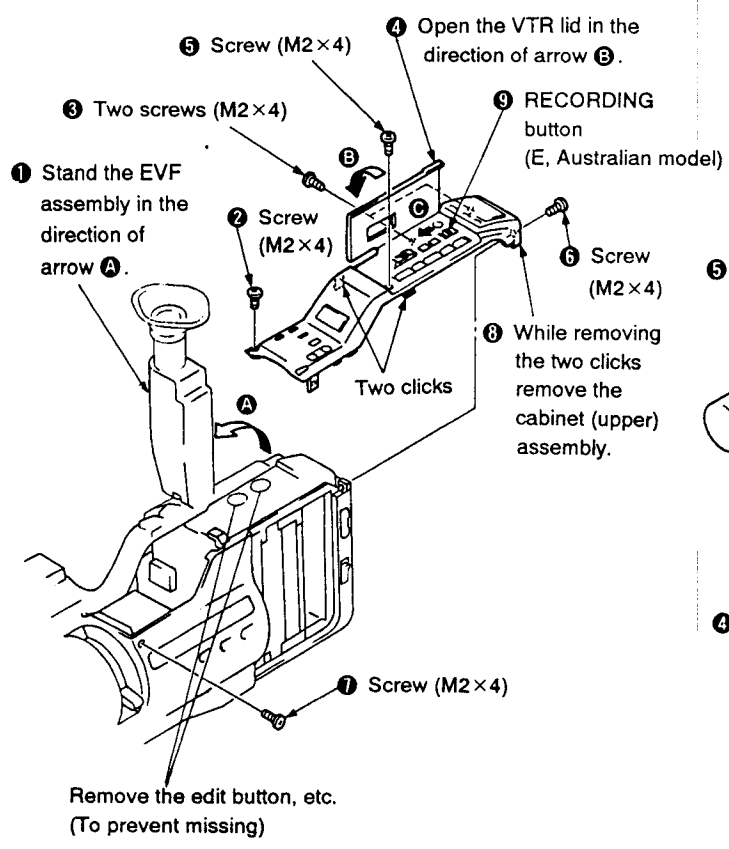

2-3. REMOVAL OF HEAD COVER ASSEMBLY

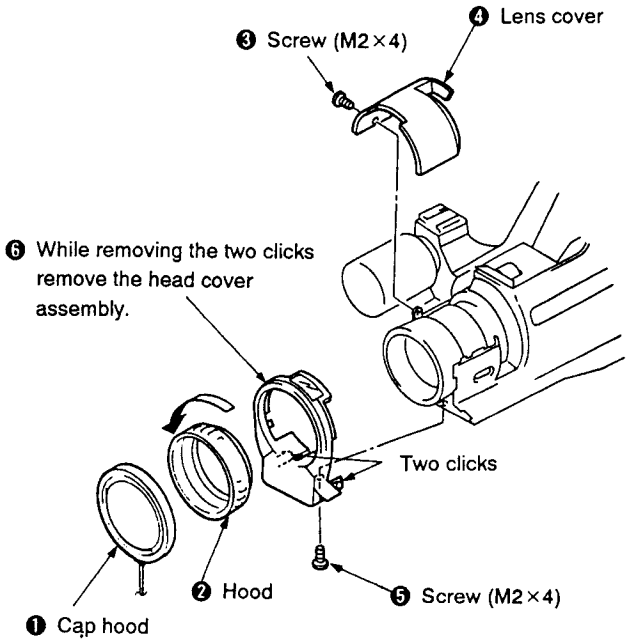

2-4. REMOVAL OF CABINET (L) ASSEMBLY

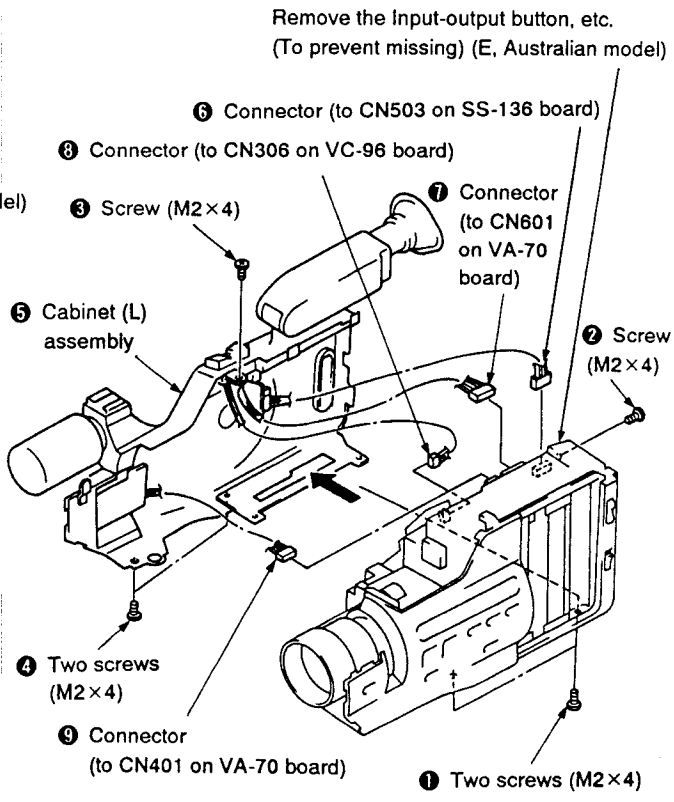

2-5. REMOVAL OF CABINET (R) ASSEMBLY

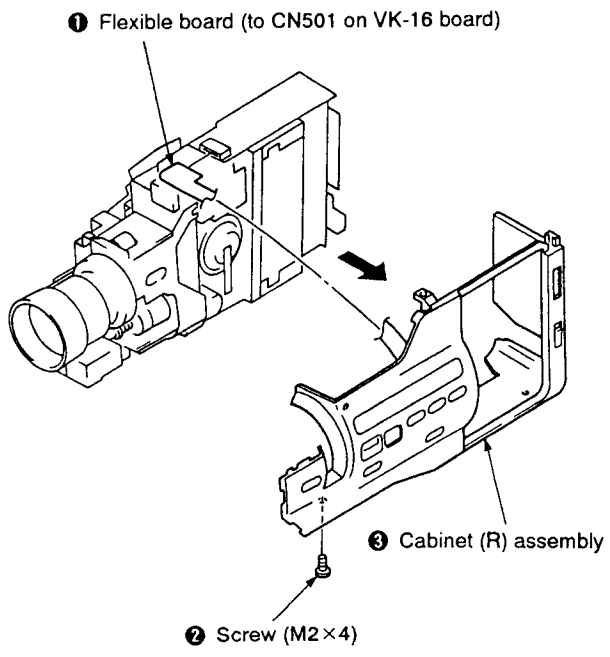

2-6. REMOVAL OF MICROPHONE (MC-82 BOARD)

❶ The removal can be done only by removing the front screw. (K2×4)

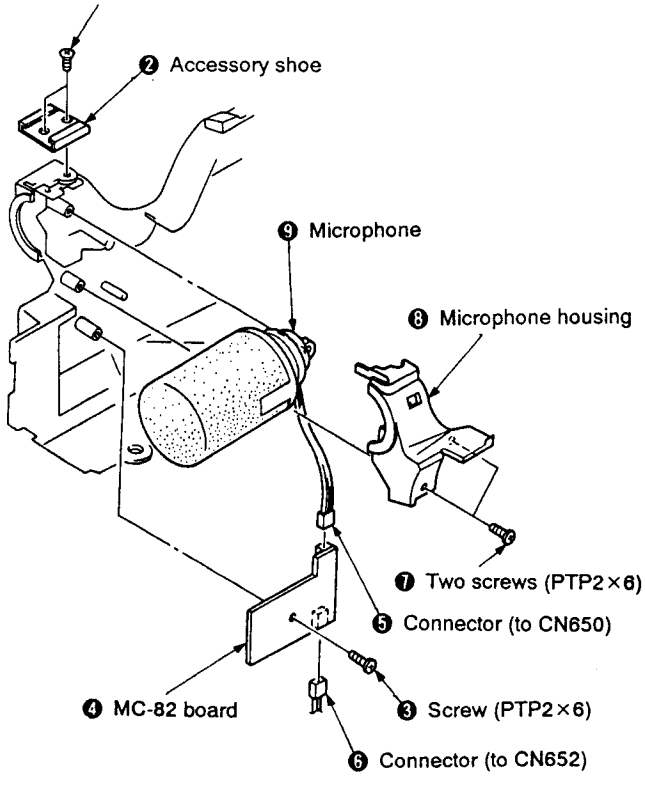

2-7. REMOVAL OF EVF ASSEMBLY

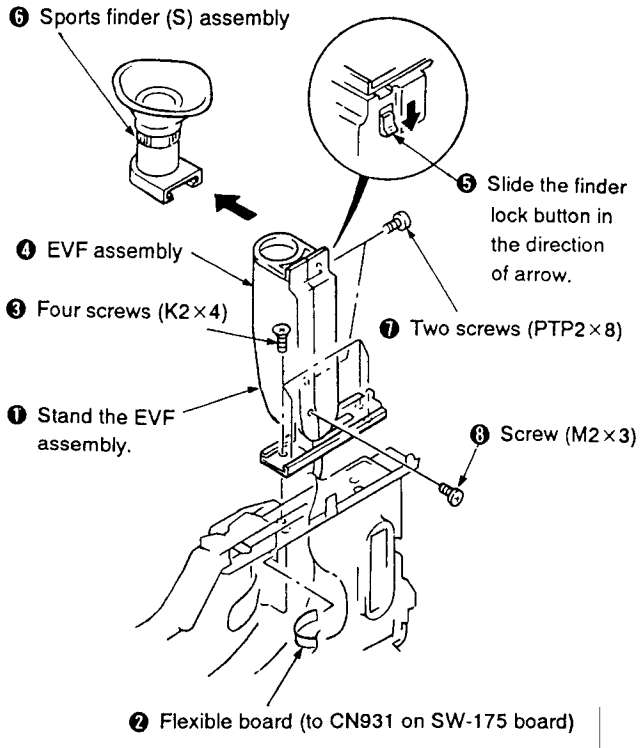

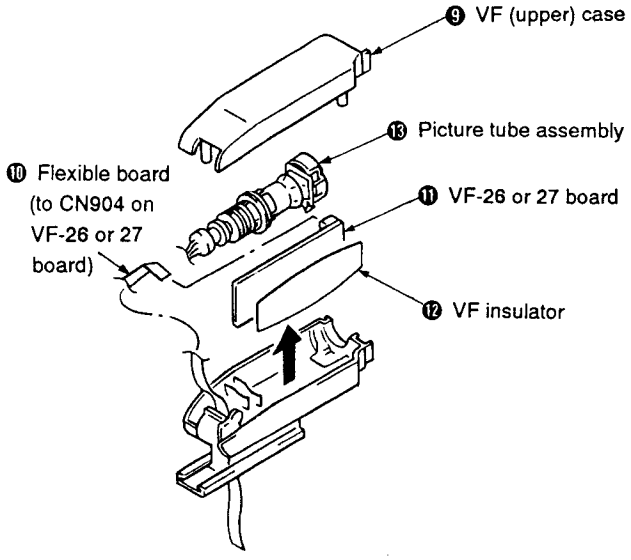

For Service Manuals Contact
MAURITRON TECHNICAL SERVICES
8 Cherry Tree Rd, Chinnor
Oxon OX9 4QY
Tel:- 01844-351694 Fax:- 01844-352554
Email:- enquiries@mauritron.co.uk

2-8. REMOVAL OF CAMERA BLOCK

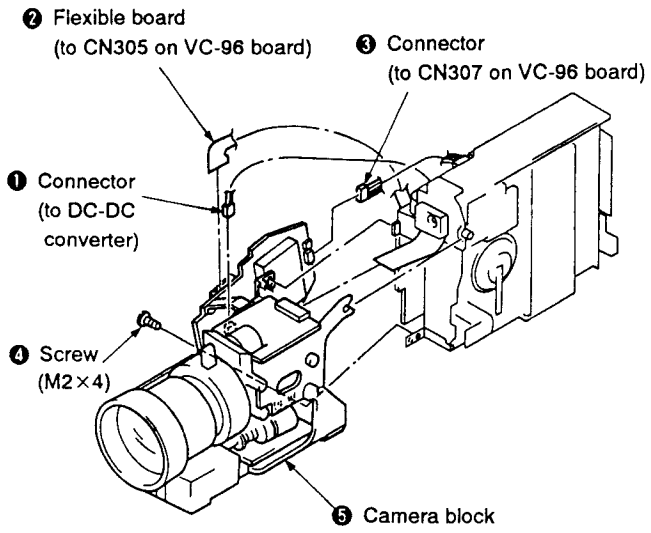

2-9. REMOVAL OF CCD IMAGER (CD-60 BOARD)

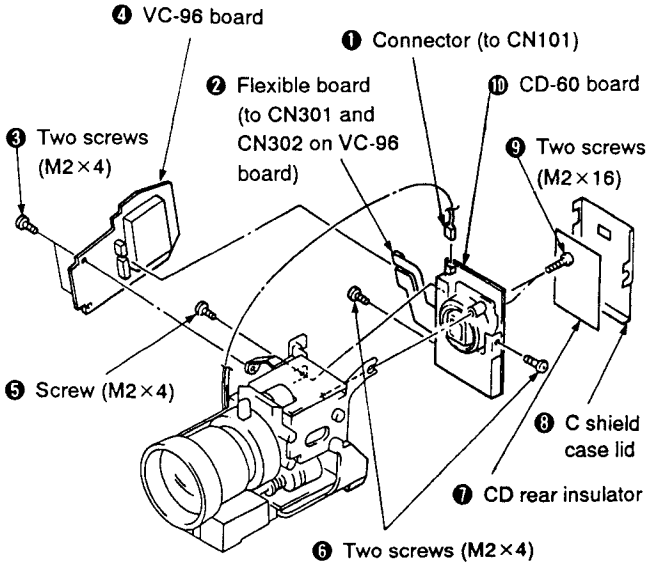

For Service Manuals Contact
MAURITRON TECHNICAL SERVICES
8 Cherry Tree Rd, Chinnor
Oxon OX9 4QY
Tel:- 01844-351694 Fax:- 01844-352554
Email:- enquiries@mauritron.co.uk

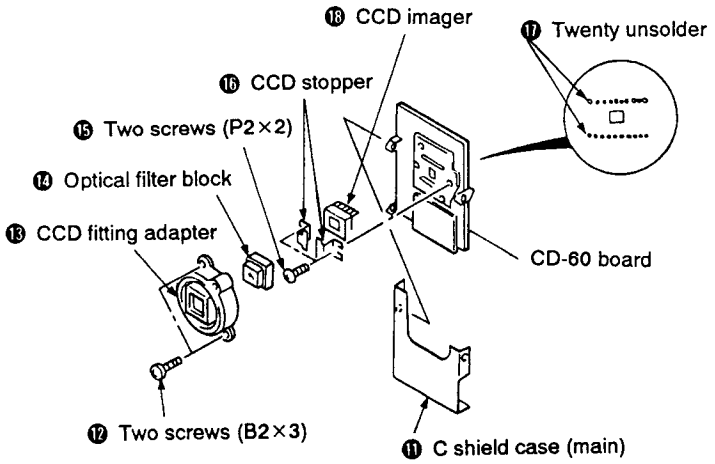

2-10. REMOVAL OF VA-70 BOARD

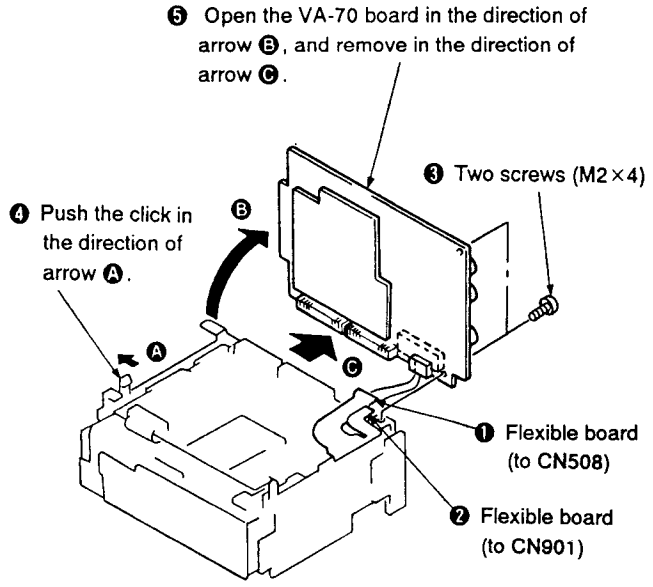

2-11. OPENING OF SS-136 BOARD

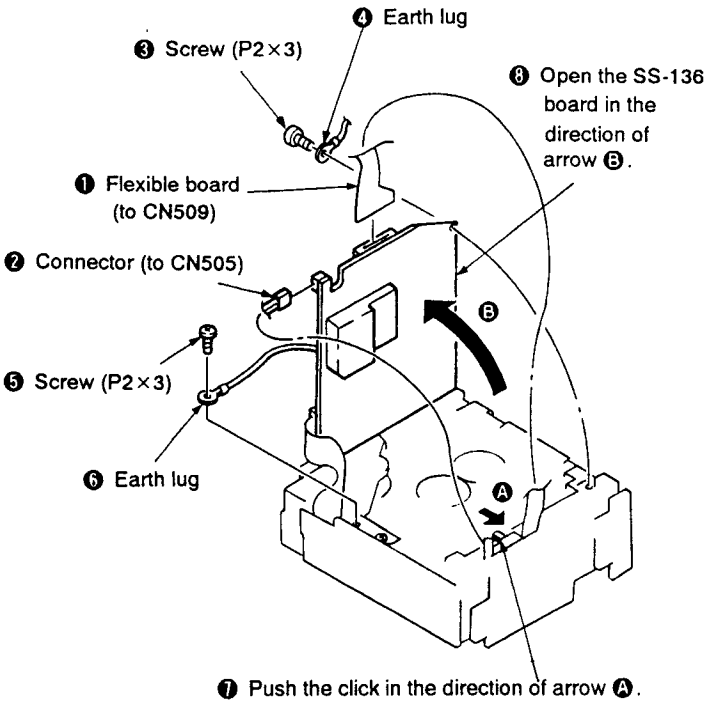

2-12. REMOVAL OF CASSETTE COMPARTMENT ASSEMBLY (N)

Note: When mounting, fit the two clicks ❻ into completely, then clamp two screws ❹

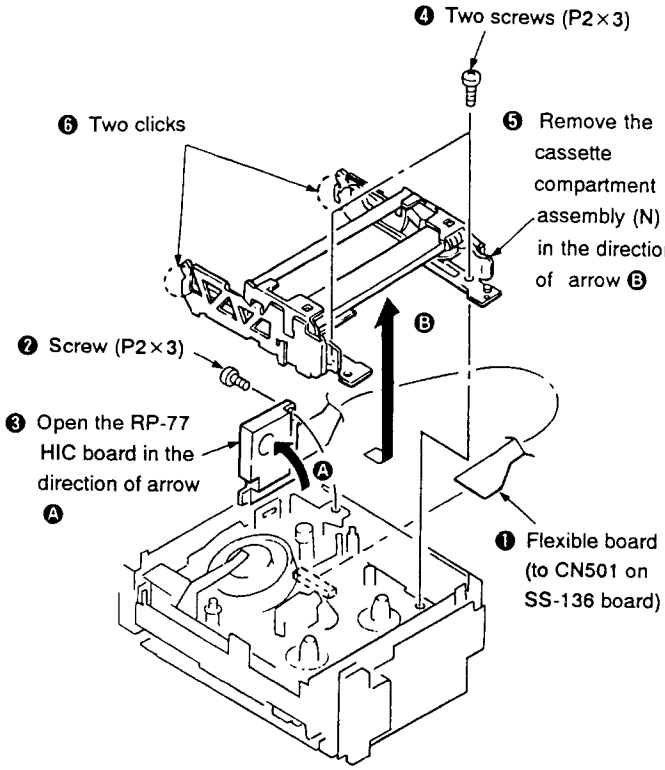

2-13. INTERNAL VIEWS

— Upper —

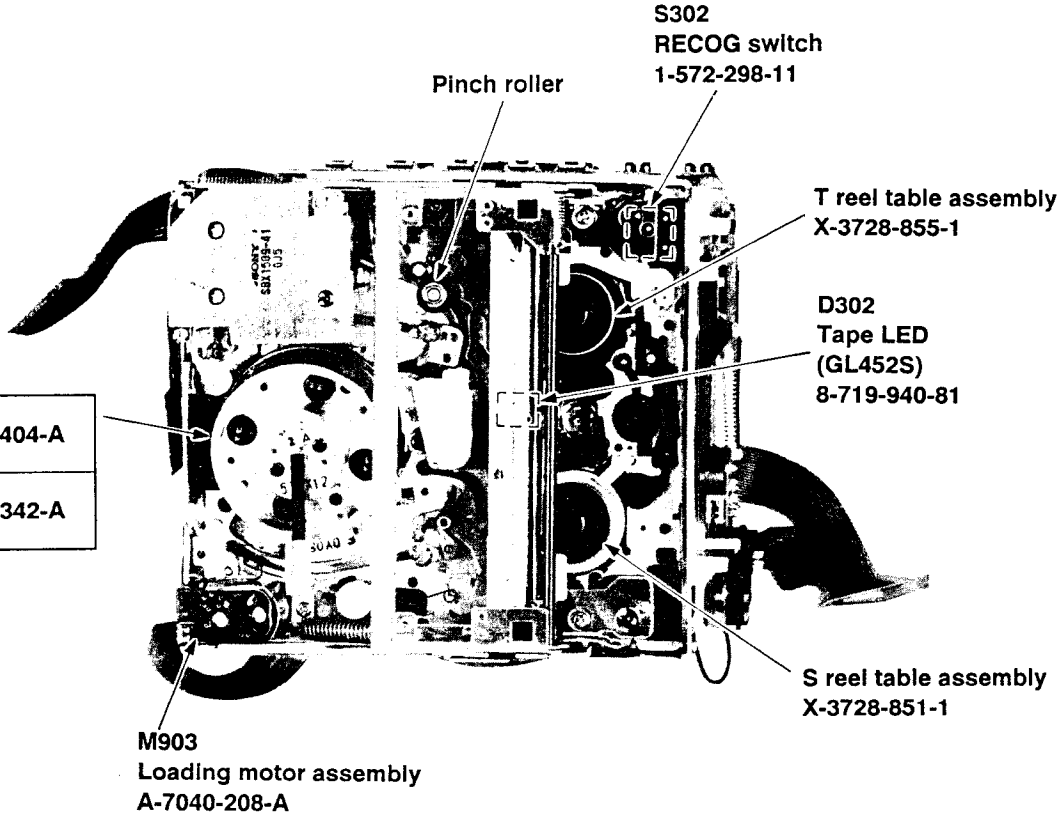

Drum ASSY (DGU-63A-R)	A-7048-404-A
Upper Drum (DGR-63-R)	A-7049-342-A

— Lower —

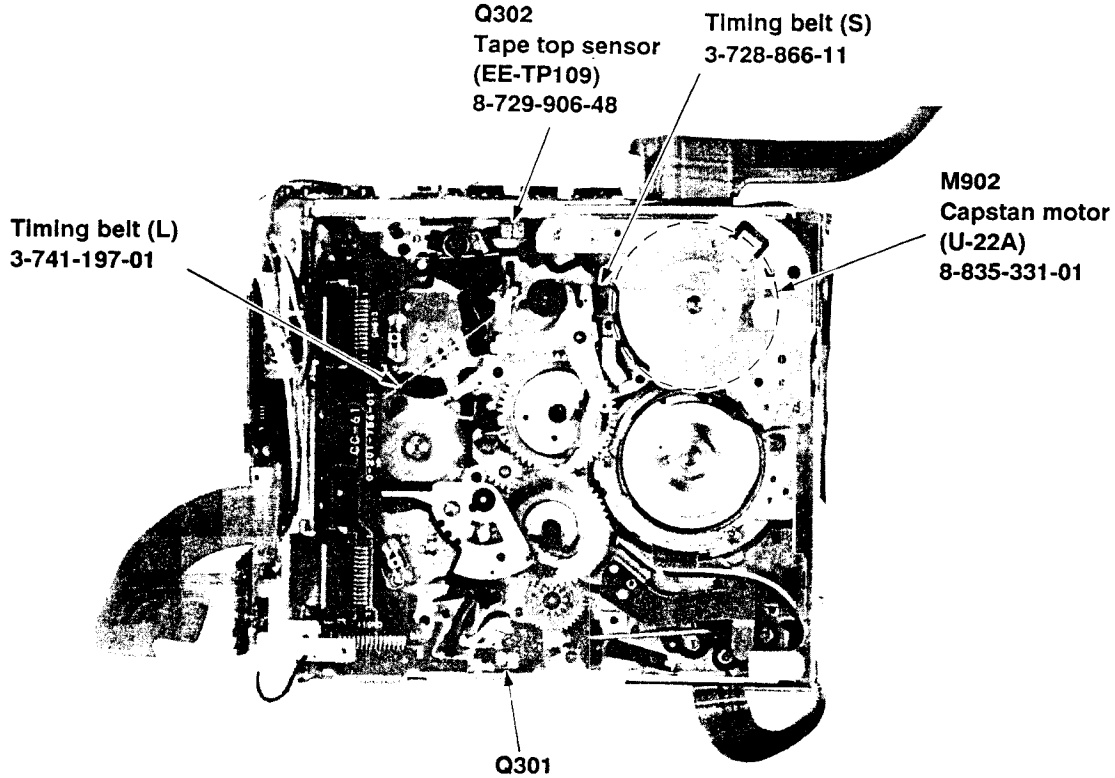

For Service Manuals Contact
MAURITRON TECHNICAL SERVICES
8 Cherry Tree Rd, Chinnor
Oxon OX9 4QY
Tel:- 01844-351694 Fax:- 01844-352554
Email:- enquiries@mauritron.co.uk

SECTION 3
DIAGRAMS

3-1. CIRCUIT BOARDS LOCATION

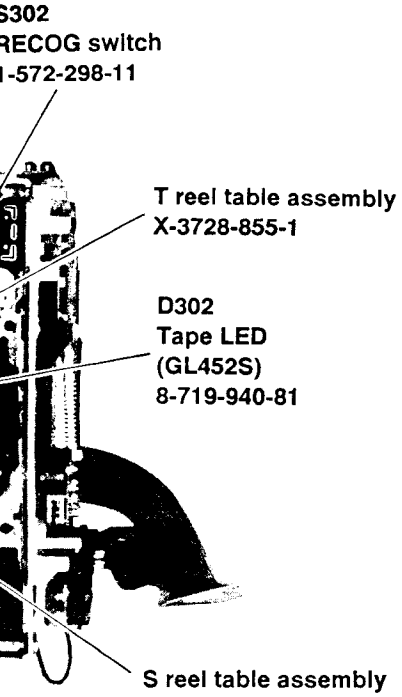

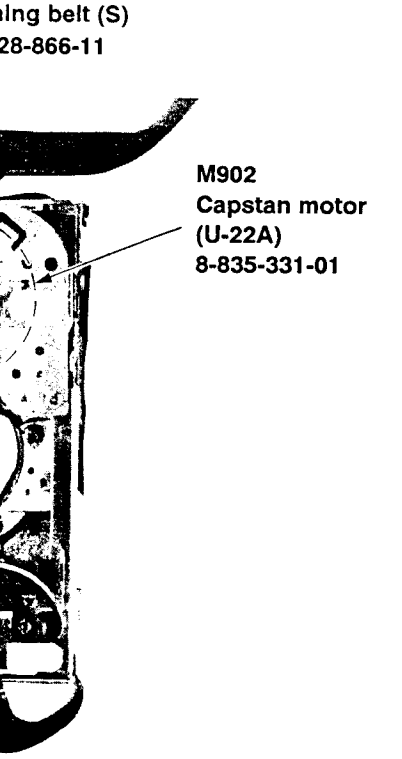

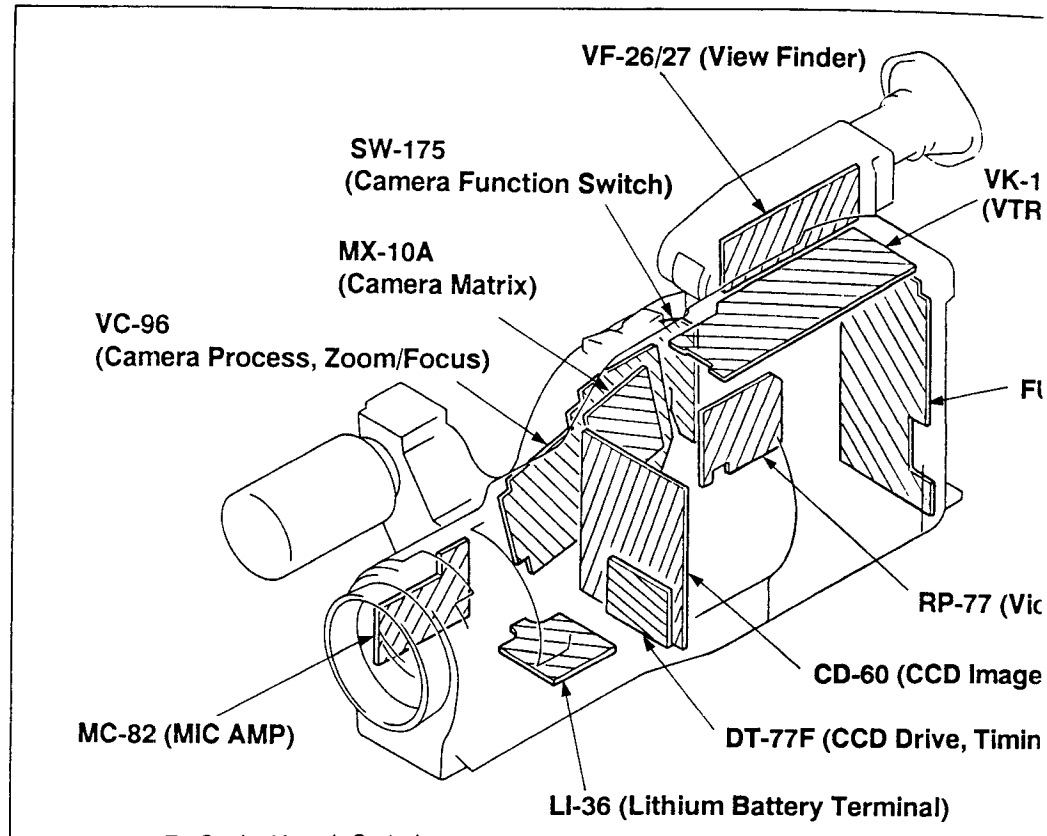

For Service Manuals Contact
MAURITRON TECHNICAL SERVICES
8 Cherry Tree Rd, Chinnor
Oxon OX9 4QY
Tel:- 01844-351694 Fax:- 01844-352554
Email:- enquiries@mauritron.co.uk

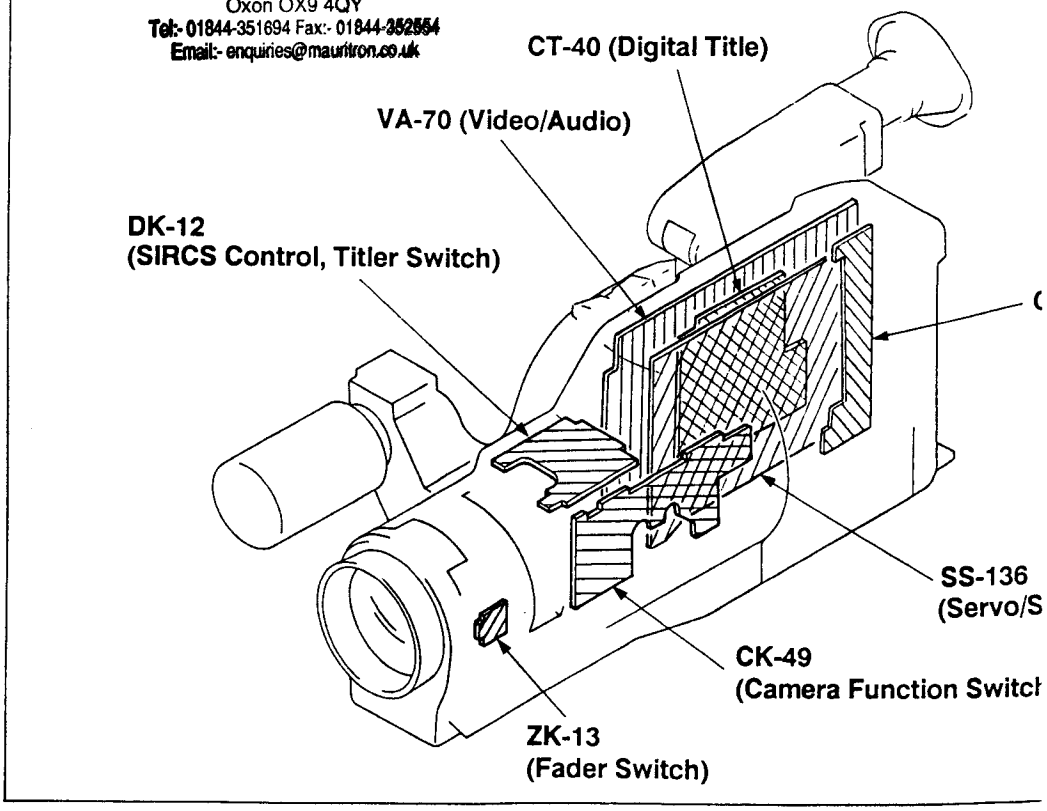

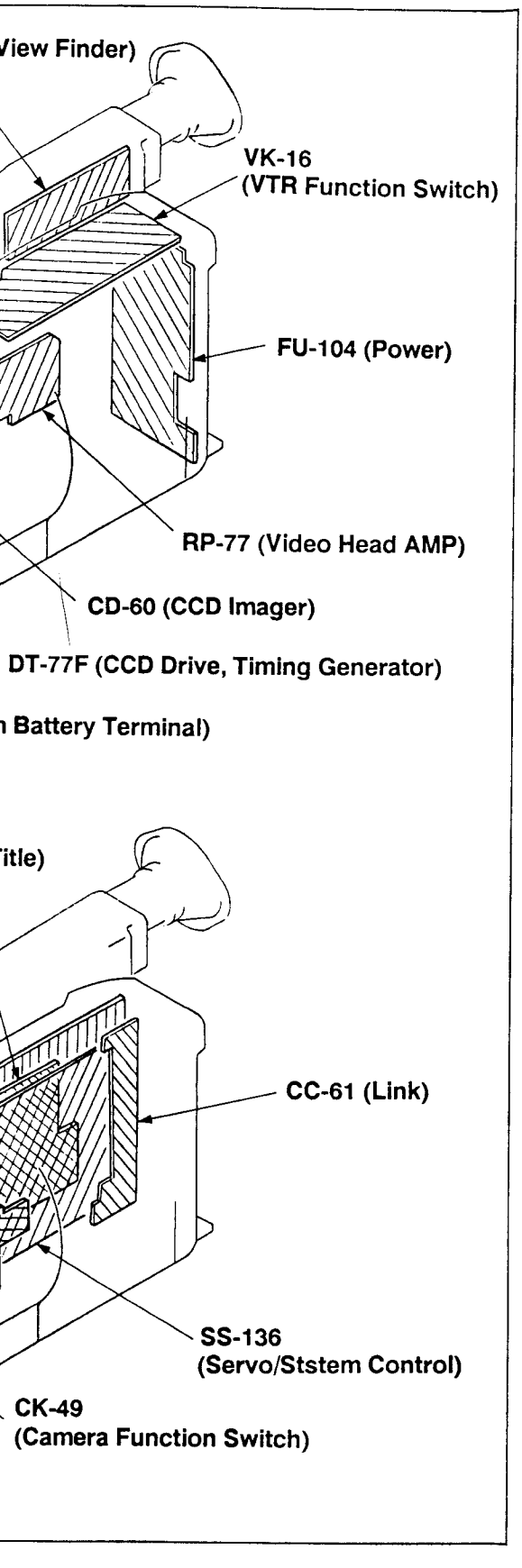

3-2. OVERALL BLOCK DIAGRAM

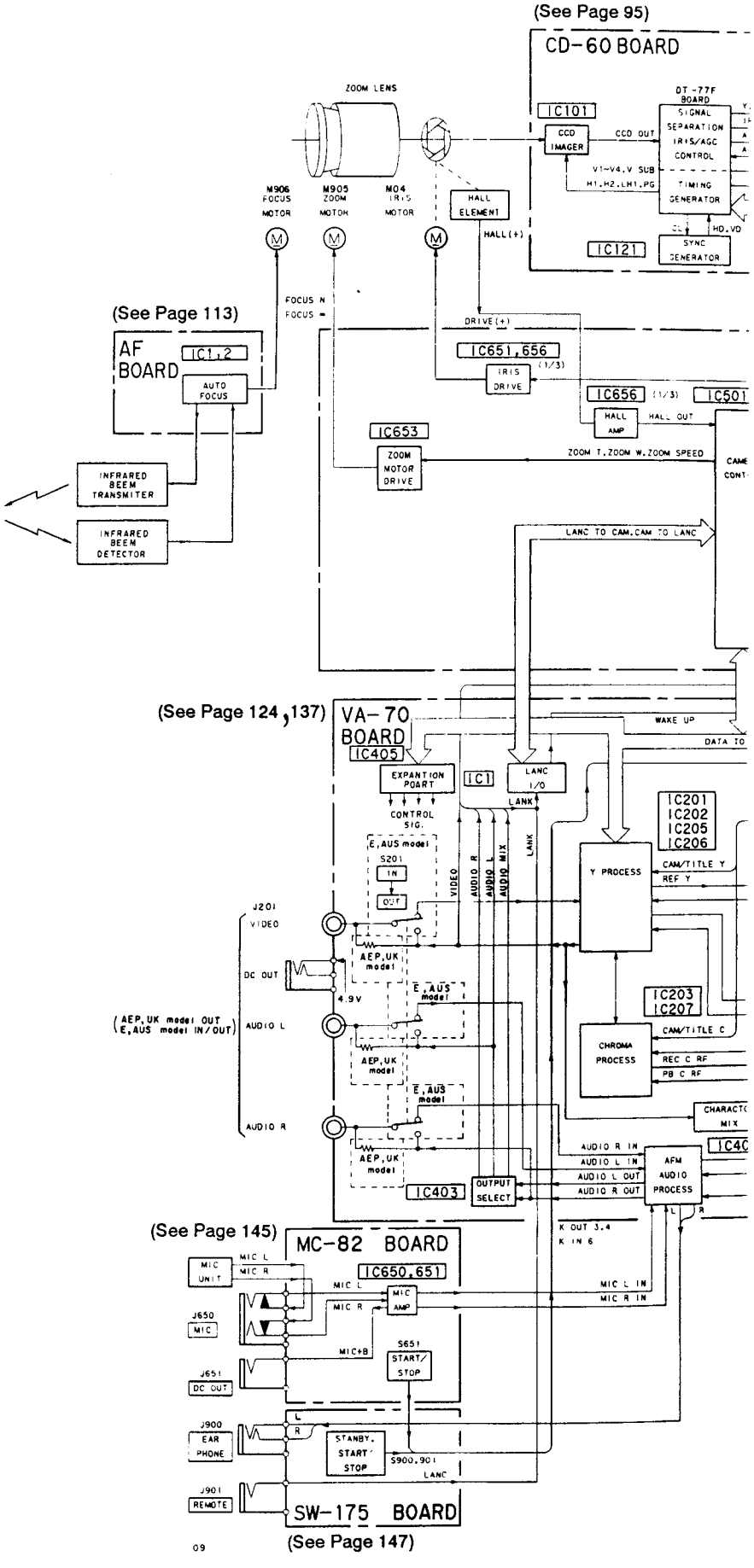

DIAGRAM

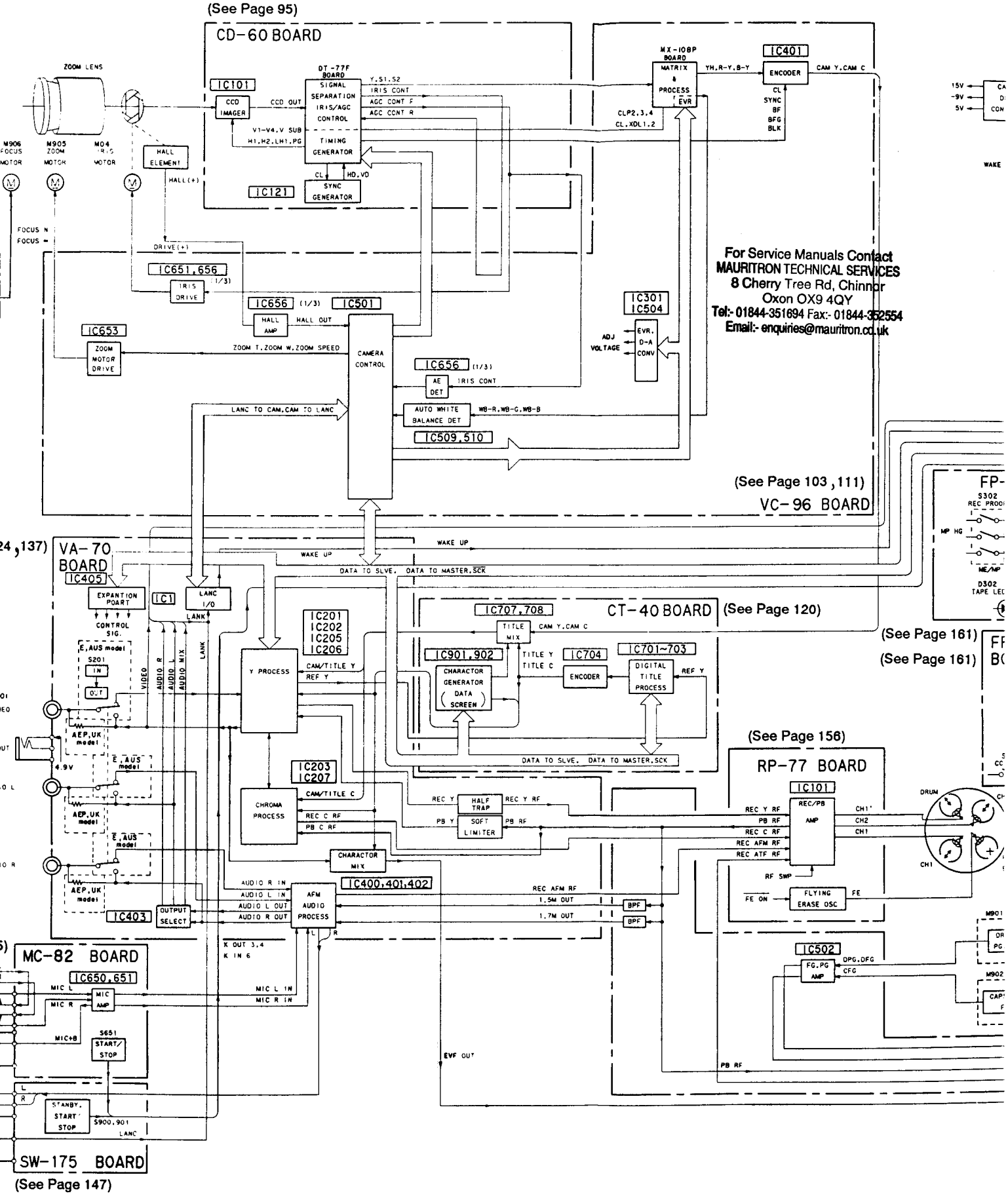
(See Page 95)
CD-60 BOARD
ZOOM LENS
IC101
CCD IMAGER
CCD OUT
DT-77F BOARD
SIGNAL SEPARATION IRIS/AGC CONTROL
TIMING GENERATOR
SYNC GENERATOR
IC121
Y,S1,S2
IRIS CONT
AGC CONT F
AGC CONT R
V1-V4,V SUB
H1,H2,LH1,PG
CL
HD,VD
MX-108P BOARD
MATRIX & PROCESS
EVR
IC401
ENCODER
YH,R-Y,B-Y
CAM Y,CAM C
CLP2,3,4
CL,XDL1,2
SYNC
BF
BFG
BLK
M906 FOCUS MOTOR
M905 ZOOM MOTOR
M04 IRIS MOTOR
HALL ELEMENT
HALL(+)
FOCUS N
FOCUS P
DRIVE(+)
IC651,656
(1/3)
IRIS DRIVE
IC656 (1/3)
IC501
HALL AMP
HALL OUT
IC653
ZOOM MOTOR DRIVE
ZOOM T,ZOOM W,ZOOM SPEED
CAMERA CONTROL
IC301
IC504
ADJ VOLTAGE
EVR. D-A CONV
IC656 (1/3)
AE DET
IRIS CONT
LANC TO CAM,CAM TO LANC
AUTO WHITE BALANCE DET
WB-R,WB-G,WB-B
IC509,510
For Service Manuals Contact
MAURITRON TECHNICAL SERVICES
8 Cherry Tree Rd, Chinnor
Oxon OX9 4QY
Tel:- 01844-351694 Fax:- 01844-352554
Email:- enquiries@mauritron.co.uk
(See Page 103,111)
VC-96 BOARD
WAKE UP
DATA TO SLVE, DATA TO MASTER,SCK
VA-70 BOARD
IC405
EXPANTION POART
CONTROL SIG.
IC1
LANC I/O
LANK
E,AUS model
S201
IN
OUT
VIDEO
AUDIO R
AUDIO L
AUDIO MIX
AEP,UK model
E,AUS model
4.9V
IC201
IC202
IC205
IC206
Y PROCESS
CAM/TITLE Y
REF Y
IC707,708
CT-40 BOARD
(See Page 120)
TITLE MIX
CAM Y,CAM C
IC901,902
CHARACTOR GENERATOR (DATA SCREEN)
TITLE Y
TITLE C
IC704
ENCODER
IC701~703
DIGITAL TITLE PROCESS
REF Y
DATA TO SLVE, DATA TO MASTER,SCK
(See Page 161)
(See Page 161)
(See Page 156)
RP-77 BOARD
IC101
REC/PB AMP
REC Y RF
PB RF
REC C RF
REC AFM RF
REC ATF RF
CH1'
CH2
CH1
DRUM
RF SWP
FLYING ERASE OSC
FE
FE ON
IC203
IC207
CHROMA PROCESS
CAM/TITLE C
REC C RF
PB C RF
REC Y
PB Y
HALF TRAP
SOFT LIMITER
REC Y RF
PB RF
CHARACTOR MIX
IC400,401,402
AUDIO R IN
AUDIO L IN
AUDIO L OUT
AUDIO R OUT
AFM AUDIO PROCESS
REC AFM RF
1.5M OUT
1.7M OUT
BPF
BPF
IC403
OUTPUT SELECT
K OUT 3,4
K IN 6
IC502
FG,PG AMP
DPG,DFG
CFG
MC-82 BOARD
IC650,651
MIC L
MIC R
MIC AMP
MIC L IN
MIC R IN
MIC+B
S651
START/STOP
STANBY, START/STOP
S900,901
LANC
EVF OUT
PB RF
SW-175 BOARD
(See Page 147)

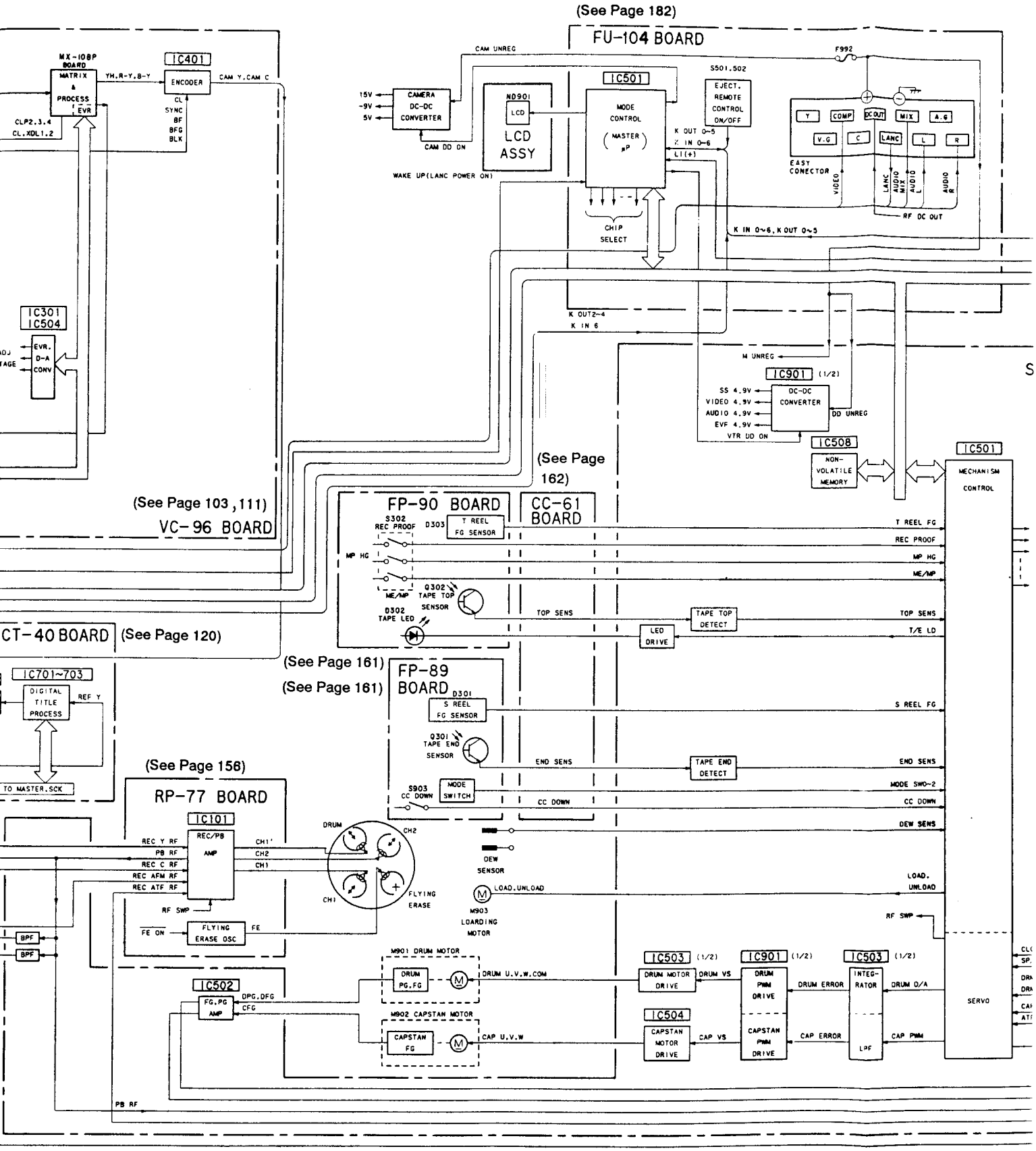
(See Page 182)
FU-104 BOARD
MX-108P BOARD
MATRIX & PROCESS
IC401
ENCODER
YH,R-Y,B-Y
CAM Y,CAM C
CAM UNREG
CAMERA DC-DC CONVERTER
15V
-9V
5V
CAM DD ON
ND901
LCD
LCD ASSY
IC501
MODE CONTROL (MASTER μP)
S501,502
EJECT, REMOTE CONTROL ON/OFF
F992
EASY CONECTOR
WAKE UP(LANC POWER ON)
CHIP SELECT
K OUT 0~5
K IN 0~6
L1(+)
K IN 0~6, K OUT 0~5
RF DC OUT
IC301
IC504
EVR, D-A CONV
K OUT2~4
K IN 6
M UNREG
IC901 (1/2)
DC-DC CONVERTER
SS 4.9V
VIDEO 4.9V
AUDIO 4.9V
EVF 4.9V
VTR DD ON
DD UNREG
IC508
NON-VOLATILE MEMORY
IC501
MECHANISM CONTROL
(See Page 162)
(See Page 103, 111)
VC-96 BOARD
FP-90 BOARD
CC-61 BOARD
S302 REC PROOF
D303
T REEL FG SENSOR
MP HG
ME/MP
Q302 TAPE TOP SENSOR
D302 TAPE LED
TOP SENS
TAPE TOP DETECT
LED DRIVE
T REEL FG
REC PROOF
MP HG
ME/MP
TOP SENS
T/E LD
CT-40 BOARD
(See Page 120)
(See Page 161)
(See Page 161)
FP-89 BOARD
D301
S REEL FG SENSOR
Q301 TAPE END SENSOR
END SENS
TAPE END DETECT
S903 CC DOWN
MODE SWITCH
CC DOWN
S REEL FG
END SENS
MODE SW0~2
CC DOWN
DEW SENS
IC701~703
DIGITAL TITLE PROCESS
REF Y
TO MASTER.SCK
(See Page 156)
RP-77 BOARD
IC101
REC/PB AMP
REC Y RF
PB RF
REC C RF
REC AFM RF
REC ATF RF
RF SWP
CH1'
CH2
CH1
DRUM
CH2
CH1
FLYING ERASE
DEW SENSOR
LOAD.UNLOAD
M903 LOARDING MOTOR
LOAD. UNLOAD
RF SWP
FLYING ERASE OSC
FE ON
FE
BPF
BPF
M901 DRUM MOTOR
DRUM PG,FG
DRUM U,V,W,COM
IC502
FG,PG AMP
DPG,DFG
CFG
M902 CAPSTAN MOTOR
CAPSTAN FG
CAP U,V,W
IC503 (1/2)
DRUM MOTOR DRIVE
DRUM VS
IC901 (1/2)
DRUM PWM DRIVE
DRUM ERROR
IC503 (1/2)
INTEG-RATOR
DRUM D/A
IC504
CAPSTAN MOTOR DRIVE
CAP VS
CAPSTAN PWM DRIVE
CAP ERROR
LPF
CAP PWM
SERVO
PB RF

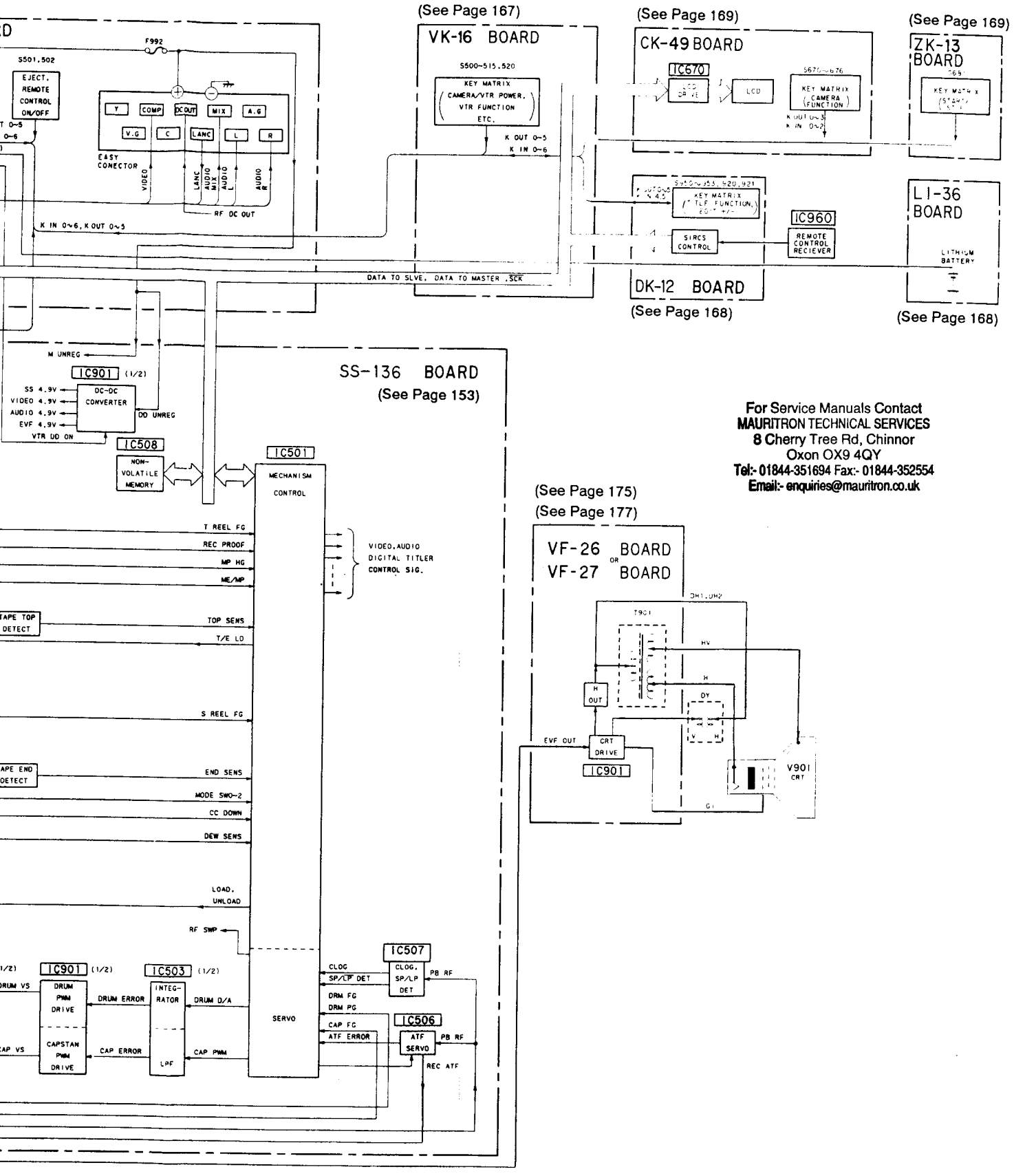

For Service Manuals Contact
MAURITRON TECHNICAL SERVICES
8 Cherry Tree Rd, Chinnor
Oxon OX9 4QY
Tel:- 01844-351694 Fax:- 01844-352554
Email:- enquiries@mauritron.co.uk

3-3. CAMERA (1) BLOCK DIAGRAM

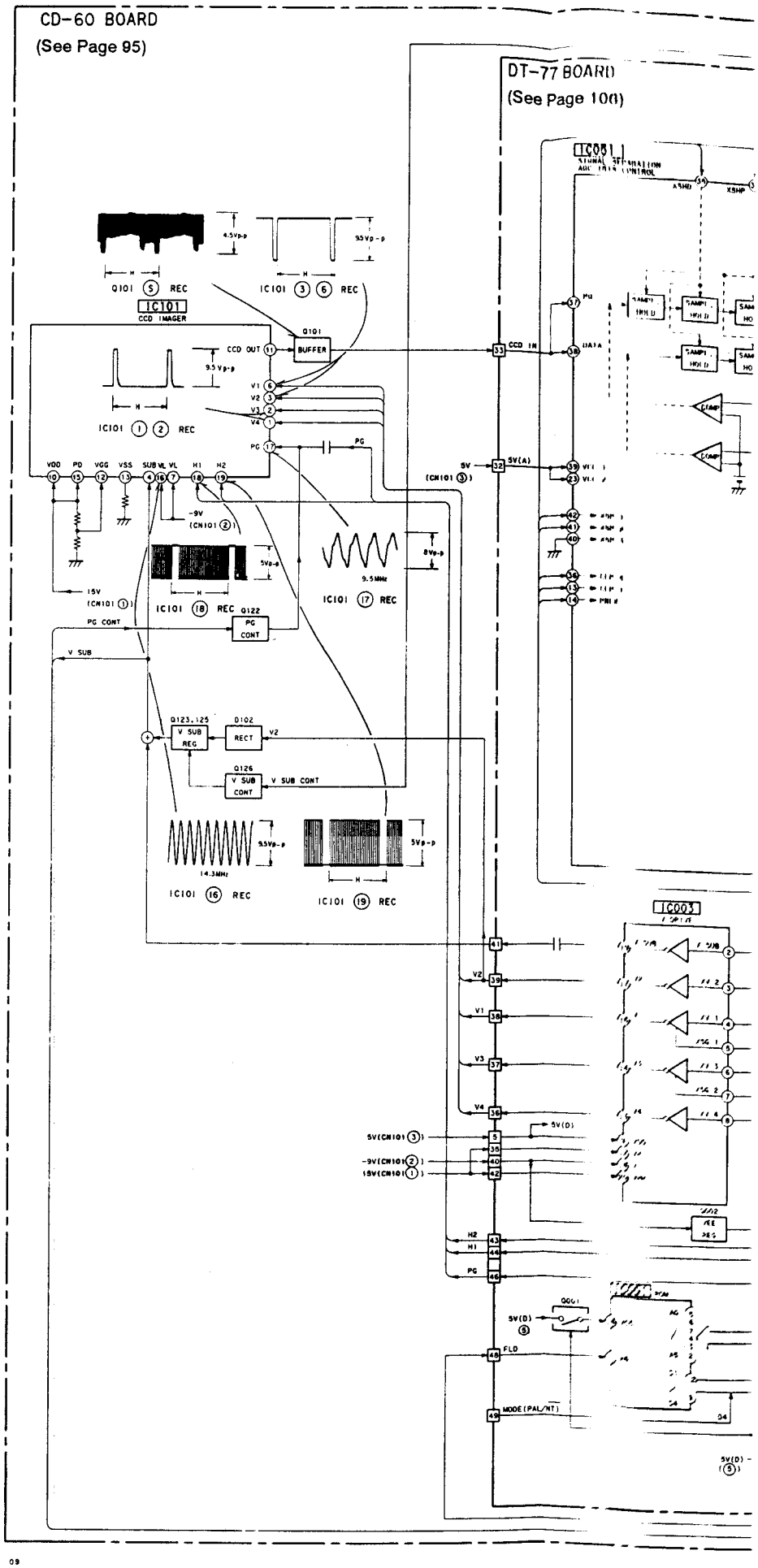

For Service Manuals Contact
MAURITRON TECHNICAL SERVICES
8 Cherry Tree Rd, Chinnor
Oxon OX9 4QY
Tel:- 01844-351694 Fax:- 01844-352554
Email:- enquiries@mauritron.co.uk

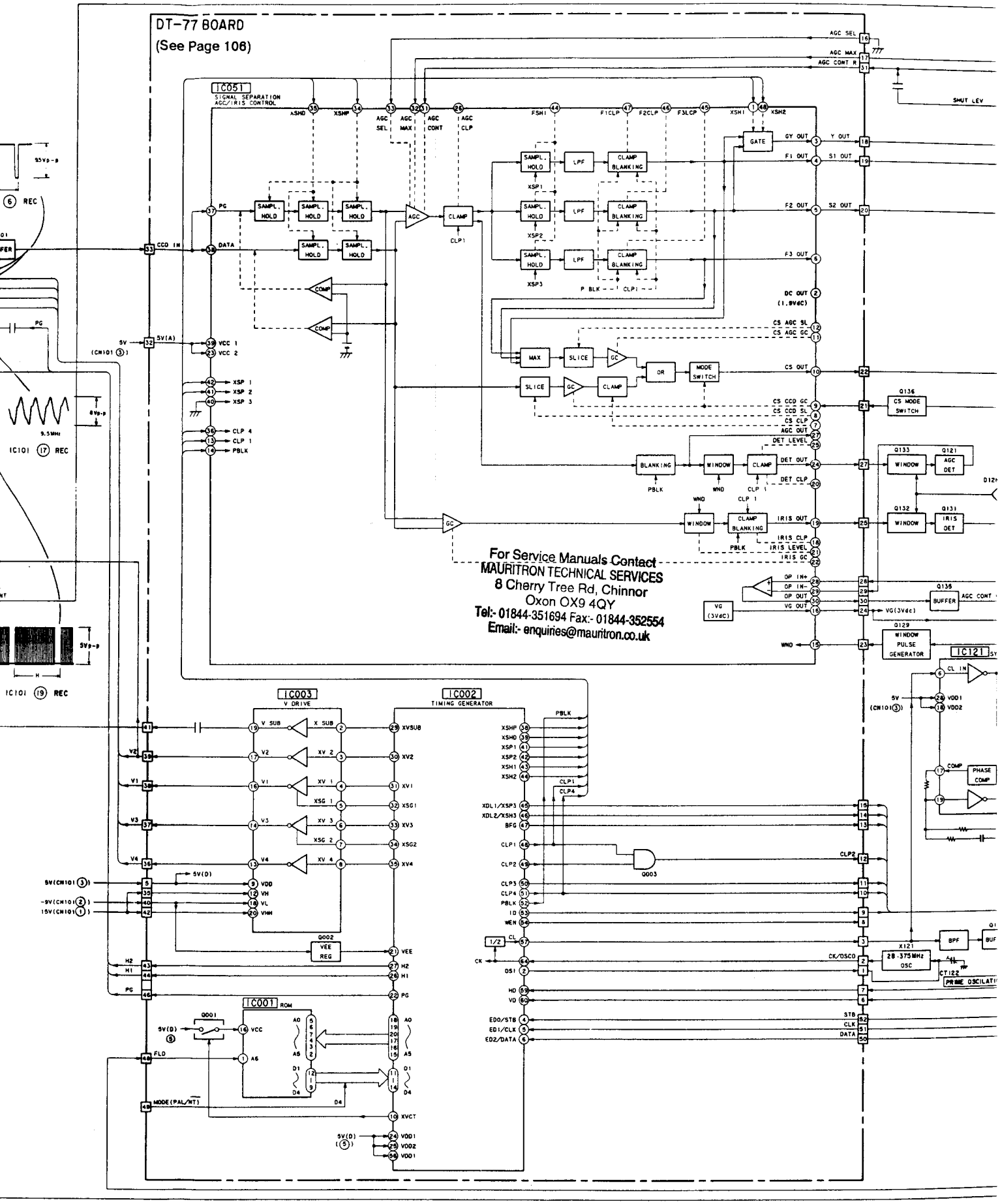
DT-77 BOARD
(See Page 106)
IC051
SIGNAL SEPARATION AGC/IRIS CONTROL
IC003
V DRIVE
IC002
TIMING GENERATOR
IC001
ROM
IC121
For Service Manuals Contact
MAURITRON TECHNICAL SERVICES
8 Cherry Tree Rd, Chinnor
Oxon OX9 4QY
Tel:- 01844-351694 Fax:- 01844-352554
Email:- enquiries@mauritron.co.uk

(See Page 103, 111)

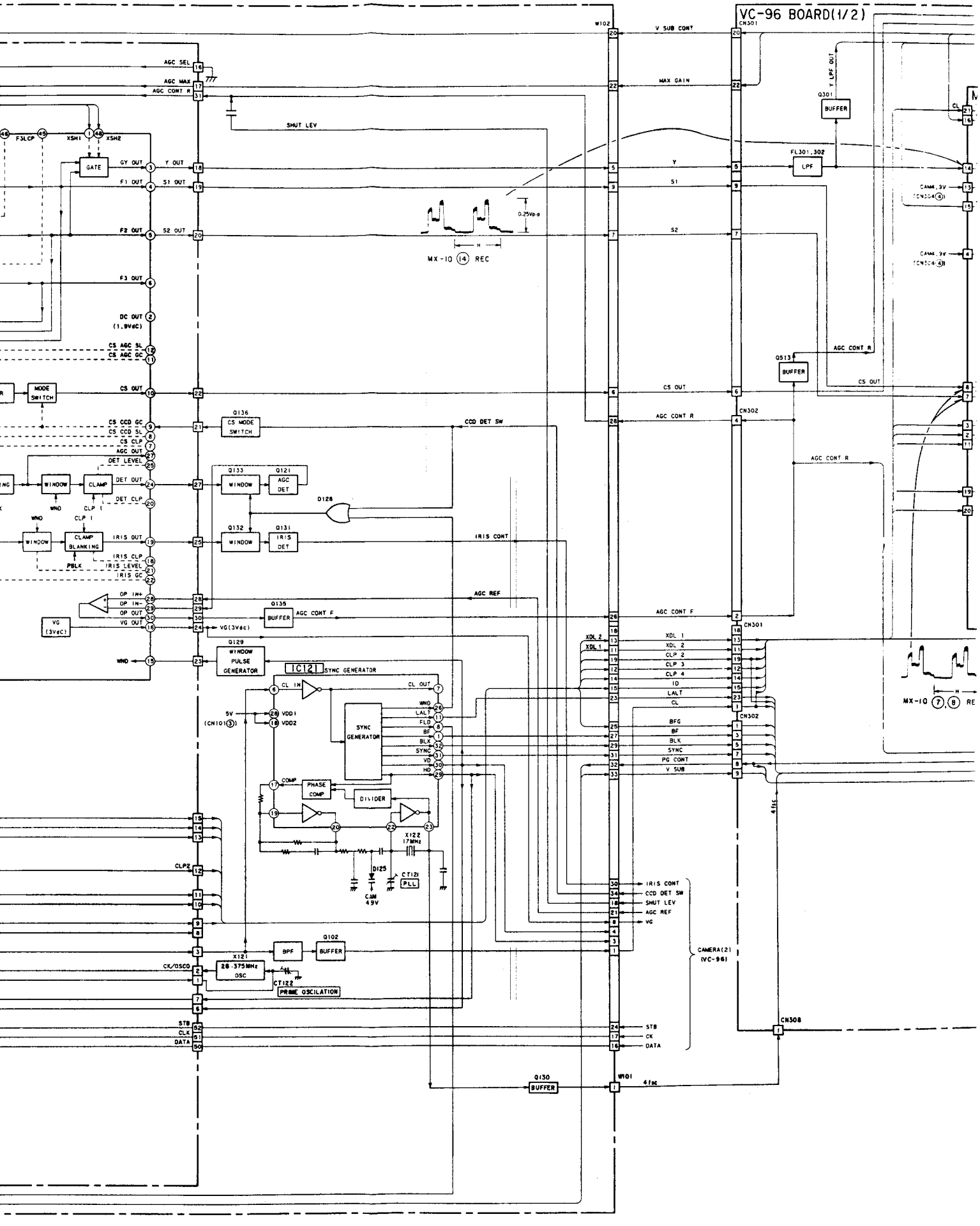

(See Page 103, 111)

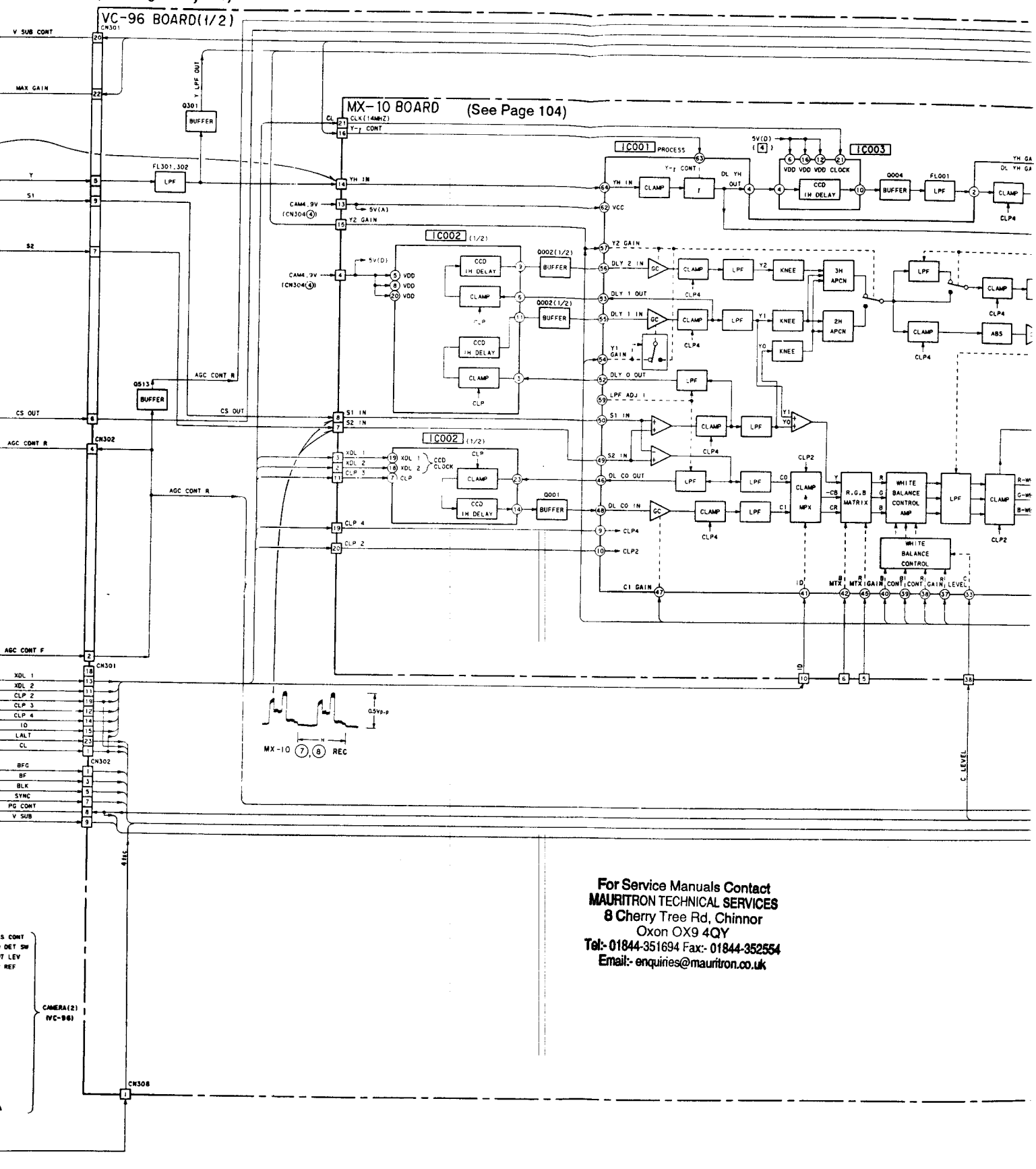

For Service Manuals Contact
MAURITRON TECHNICAL SERVICES
8 Cherry Tree Rd, Chinnor
Oxon OX9 **4QY**
Tel:- 01844-351694 Fax:- 01844-352554
Email:- enquiries@mauritron.co.uk

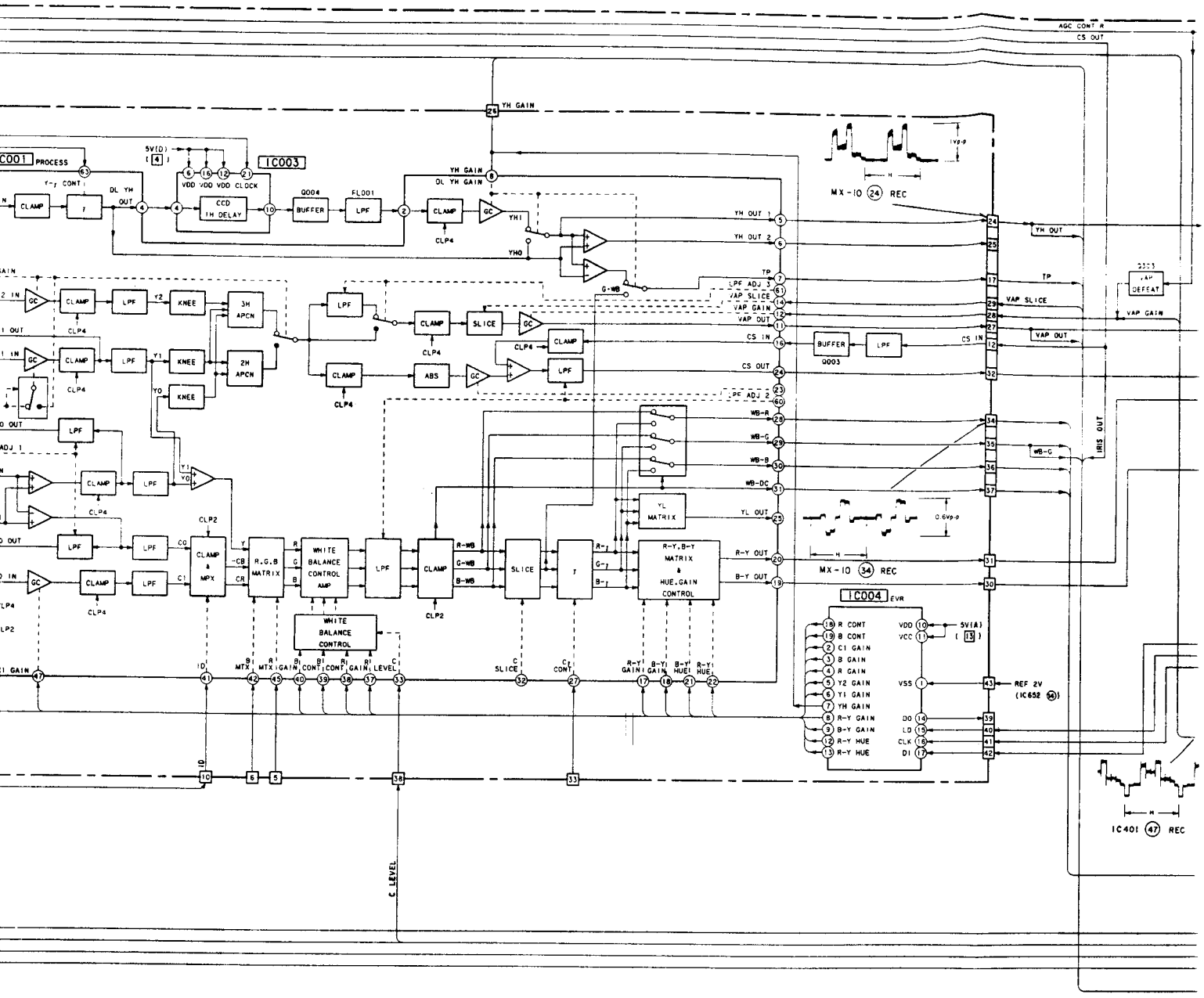
IC001 PROCESS
IC003
IC004 EVR
CLAMP
LPF
KNEE
3H APCN
2H APCN
CCD 1H DELAY
BUFFER
Q004
FL001
GC
SLICE
ABS
R.G.B MATRIX
CLAMP & MPX
WHITE BALANCE CONTROL AMP
WHITE BALANCE CONTROL
YL MATRIX
R-Y, B-Y MATRIX & HUE, GAIN CONTROL
YH GAIN
DL YH GAIN
YH OUT 1
YH OUT 2
TP
LPF ADJ 2
VAP SLICE
VAP GAIN
VAP OUT
CS IN
CS OUT
WB-R
WB-G
WB-B
WB-DC
YL OUT
R-Y OUT
B-Y OUT
R CONT
B CONT
C1 GAIN
B GAIN
R GAIN
Y2 GAIN
Y1 GAIN
YH GAIN
R-Y GAIN
B-Y GAIN
R-Y HUE
R-Y HUE
VDD
VCC
VSS
DO
LD
CLK
DI
AGC CONT R
IRIS OUT
MX-10 (24) REC
MX-10 (34) REC
IC401 (47) REC
REF 2V (IC652 (9))
C LEVEL

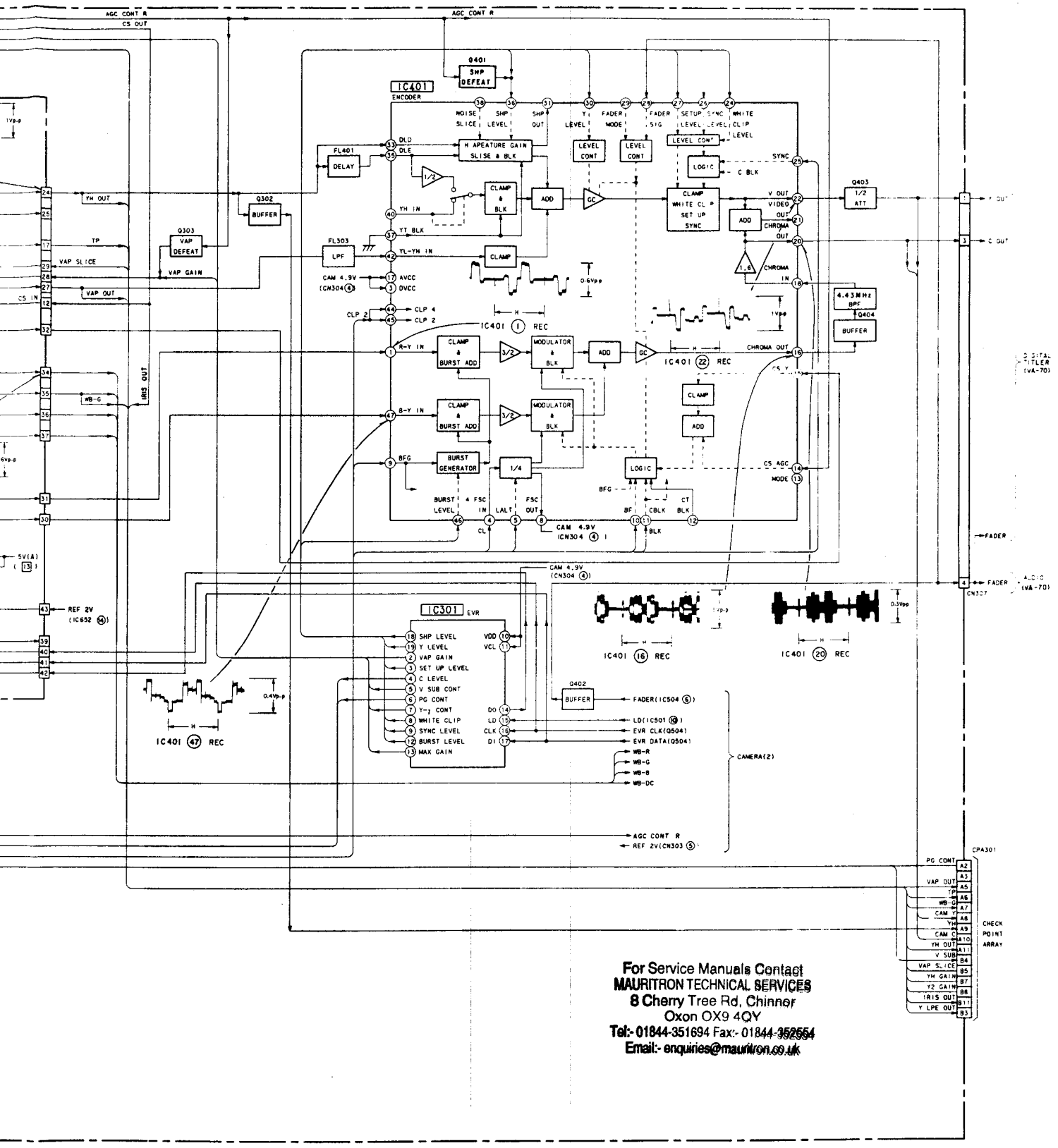

For Service Manuals Contact
MAURITRON TECHNICAL SERVICES
8 Cherry Tree Rd, Chinnor
Oxon OX9 4QY
Tel:- 01844-351694 Fax:- 01844-352554
Email:- enquiries@mauritron.co.uk

3-4. CAMERA SYSTEM CONTROL VC-96 BOARD IC501 (MC68HC11E9)

[Description]

MC68HC11E9 is a 8-bit one-chip micro computer with a built-in nonvalotile memory (EEPROM). The camera system is controlled by this micro computer. In addition, protocol master control of the LANC communication can be performed.

For Service Manuals Contact
MAURITRON TECHNICAL SERVICES
8 Cherry Tree Rd, Chinnor
Oxon OX9 4QY
Tel:- 01844-351694 Fax:- 01844-352554
Email:- enquiries@mauritron.co.uk

1. Function

1) EVR Control
2) AWB Control
3) AE Control
4) LANC communication protocol control

2. Pin Description

Pin No.	Signal Name	I/O	Function
1	AE	I	——
2	NC	–	——
3	NC	–	——
4	NC	–	——
5	DIS CHG	O	AWB. AE Integration-type A/D reset pulse
6	B SELECT	O	AWB Instrumentation line select pulse (blue)
7	G SELECT	O	AWB Instrumentation line select pulse (green)
8	R SELECT	O	AWB Instrumentation line select pulse (red)
9	TG STB	O	Strobe signal for timing generator (IC002 on DT-77)
10	DA LD1	O	Load pulse for D/A converter (IC301 on MX-10)
11	DA LD0	O	Load pulse for D/A converter (IC504)
12	DA SSW	O	Switching pulse output for communication bus line.
13	F SENS1	I	——
14	HALL SENS	I	——
15	ZOOM SENS	I	——
16	AN5	I	
17	ZOOM KEY	I	Zoom switch voltage input (Analog input)
18	AGC CONT	I	AGC voltage input (Analog input)
19	F SENS2	I	——
20	AE IN	I	AE Integration-type A/D converter comparator input
21	A/D REF (–)	–	Built-in A/D converter the minimum standard voltage (Analog input)
22	A/D REF (+)	–	Built-in A/D converter the minimum standard voltage (Analog input)
23	Vss	–	GND
24	Vss	–	GND
25	MODE B	I	Pull up to SS 4.9V
26	NC	–	——
27	MODE A	I	Pull down to GND
28	STR A	–	——
29	E	–	——
30	STR B	–	——
31	EXTAL	$\overline{O}$	Built-in inverter output for oscillating element
32	NC	–	——

Pin No.	Signal Name	I/O	Function
33	XTAL	I	Built-in inverter input for oscillating element
34	CAM POWER	I	Camera power source rise supervision
35	NC	–	——
36	JCS	O	——
37	PC2	–	——
38	AF MODE	O	AUTO FOCUS ON/OFF select
39	FOCUS N	O	Focus motor N-direction rotaing designation
40	FOCUS F	O	Focus motor ∞ -direction rotaing designation
41	ZOOM T	O	Zoom motor T-direction rotaing designation
42	ZOOM W	O	Zoom motor W-direction rotaing designation
43	$\overline{\text{RESET}}$	I	Reset
44	NC	–	——
45	$\overline{\text{XIRQ}}$	I	Pull up tp SS 4.9V
46	$\overline{\text{IRQ}}$	I	Pull up tp SS 4.9V
47	LANC IN	I	LANC input
48	NC	–	——
49	Vss	–	GND
50	LANC OUT	O	LANC output
51	CAM SI	I	Serial data input
52	CAM SO	O	Serial data output
53	SCK	O	Serial clock
54	SENS DRIVE	O	——
55	VDD	–	SS 4.9V
56	FADER B/$\overline{\text{W}}$	O	Fader mode black/white select
57	PA6	O	CCD DET switch select
58	OC3	–	——
59	$\overline{\text{MAN GAIN}}$	O	AGC system automatic/manual select
60	NC	–	——
61	NC	–	——
62	$\overline{\text{MAN IRIS}}$	O	IRIS system automatic/manual select
63	$\overline{\text{CAM CS}}$	I	Camera chip select input
64	$\overline{\text{AW IN}}$	I	AWB Integration-type A/D converter comparator input

For Service Manuals Contact
MAURITRON TECHNICAL SERVICES
8 Cherry Tree Rd, Chinnor
Oxon OX9 4QY
Tel:- 01844-351694 Fax:- 01844-352554
Email:- enquiries@mauritron.co.uk

3-5. CAMERA (2) BLOCK DIAGRAM

For Service Manuals Contact
MAURITRON TECHNICAL SERVICES
8 Cherry Tree Rd, Chinnor
Oxon OX9 4QY
Tel:- 01844-351694 Fax:- 01844-352554
Email:- enquiries@mauritron.co.uk

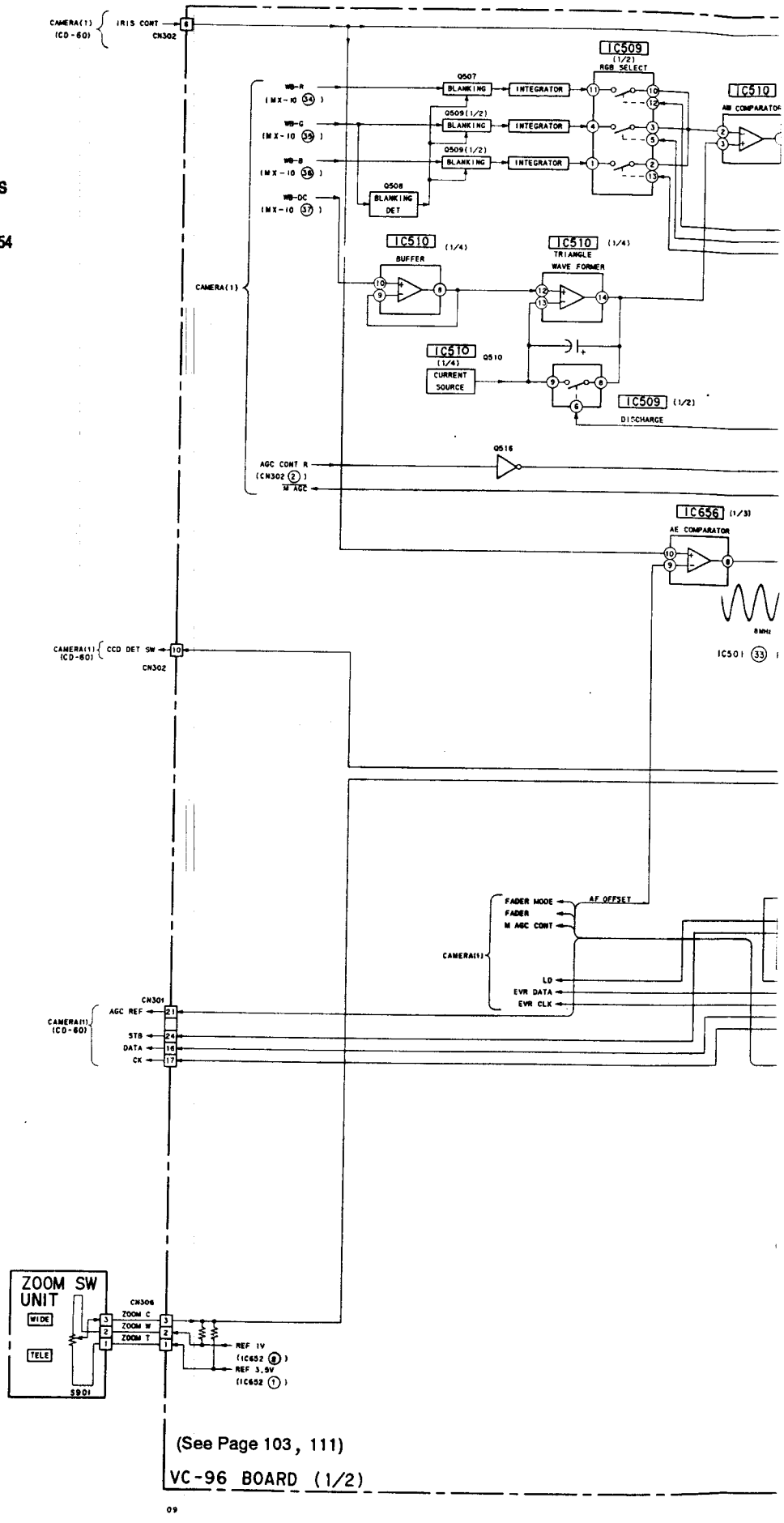

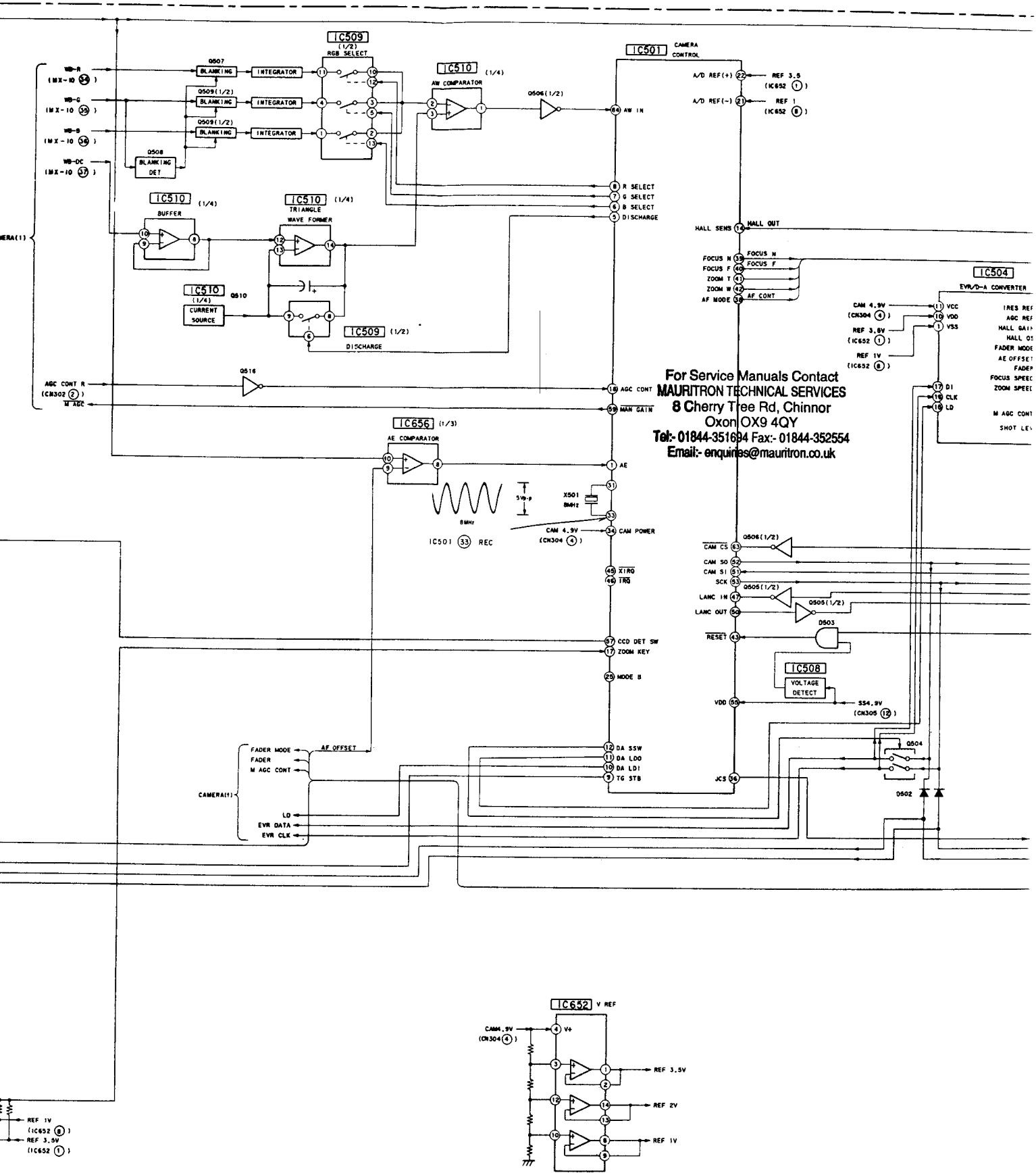

For Service Manuals Contact
MAURITRON TECHNICAL SERVICES
8 Cherry Tree Rd, Chinnor
Oxon OX9 4QY
Tel:- 01844-351694 Fax:- 01844-352554
Email:- enquiries@mauritron.co.uk

e Page 103, 111)

96 BOARD (1/2)

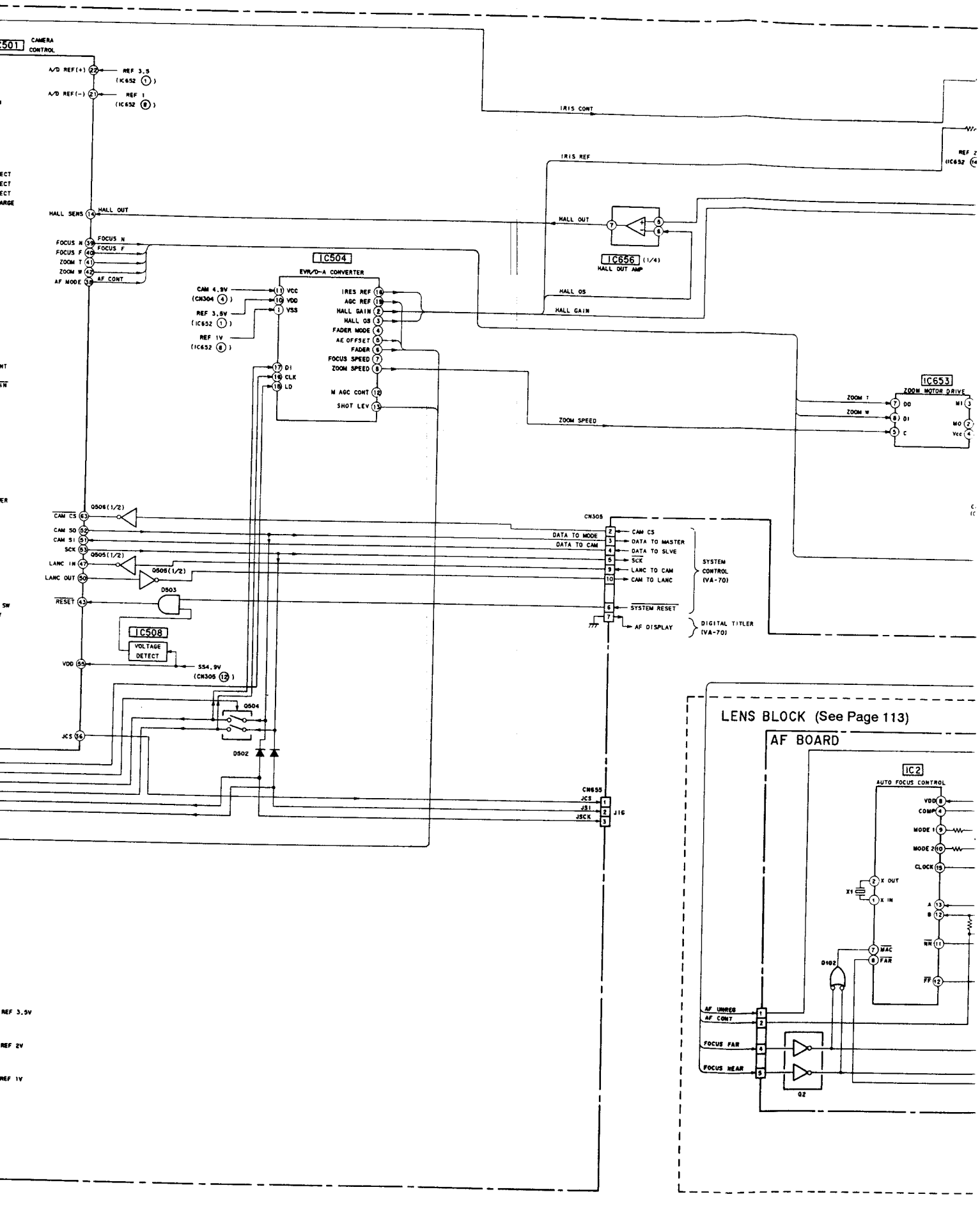
IC501
CAMERA CONTROL
A/D REF(+) 22
REF 3.9 (IC652 1)
A/D REF(-) 21
REF 1 (IC652 8)
IRIS CONT
IRIS REF
REF 2 (IC652 14)
HALL SENS 14
HALL OUT
HALL OUT 7
IC656 (1/4)
HALL OUT AMP
FOCUS N 39
FOCUS F 40
ZOOM T 41
ZOOM W 42
AF MODE 38
AF CONT
IC504
EVR/D-A CONVERTER
CAM 4.5V (CN304 4)
REF 3.9V (IC652 1)
REF 1V (IC652 8)
VCC 11
VDD 10
VSS 1
DI 17
CLK 18
LD 19
IRES REF 16
AGC REF 15
HALL GAIN 2
HALL OS 3
FADER MODE 4
AE OFFSET 5
FADER 6
FOCUS SPEED 7
ZOOM SPEED 8
M AGC CONT 12
SHOT LEV 13
HALL OS
HALL GAIN
ZOOM SPEED
IC653
ZOOM MOTOR DRIVE
ZOOM T
ZOOM W
DO
DI
C
MI
MO
Vcc
CAM CS 63
CAM SO 62
CAM SI 61
SCK 53
LANC IN 47
LANC OUT 50
RESET 43
Q506(1/2)
Q505(1/2)
Q508(1/2)
Q503
IC508
VOLTAGE DETECT
VDD 55
5S4.9V (CN305 12)
Q504
JCS 34
Q502
CN305
DATA TO MODE
DATA TO CAM
CAM CS
DATA TO MASTER
DATA TO SLVE
SCK
LANC TO CAM
CAM TO LANC
SYSTEM CONTROL (VA-70)
SYSTEM RESET
AF DISPLAY
DIGITAL TITLER (VA-70)
CN655
JCS
JSI
JSCK
J1G
LENS BLOCK (See Page 113)
AF BOARD
IC2
AUTO FOCUS CONTROL
VDD 8
COMP 4
MODE 1 9
MODE 2 10
CLOCK 15
X OUT 2
X IN 1
X1
A 13
B 12
NN 11
FF 12
MAC 7
FAR 8
D402
AF UNREG 1
AF CONT 2
FOCUS FAR 4
FOCUS NEAR 5
Q2

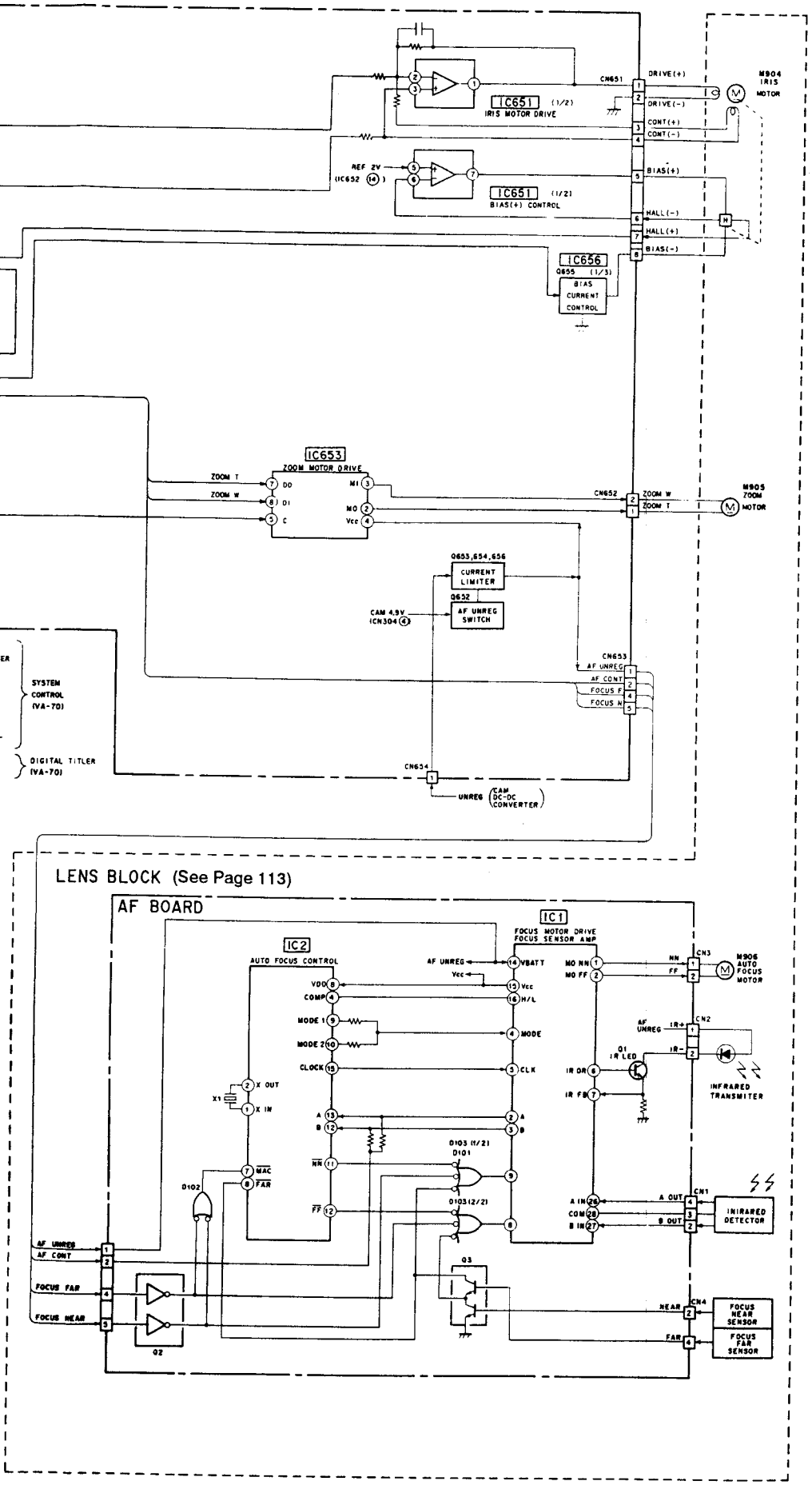

For Service Manuals Contact
MAURITRON TECHNICAL SERVICES
8 Cherry Tree Rd, Chinnor
Oxon OX9 4QY
Tel:- 01844-351694 Fax:- 01844-352554
Email:- enquiries@mauritron.co.uk

3-6. TITLER BLOCK DIAGRAM

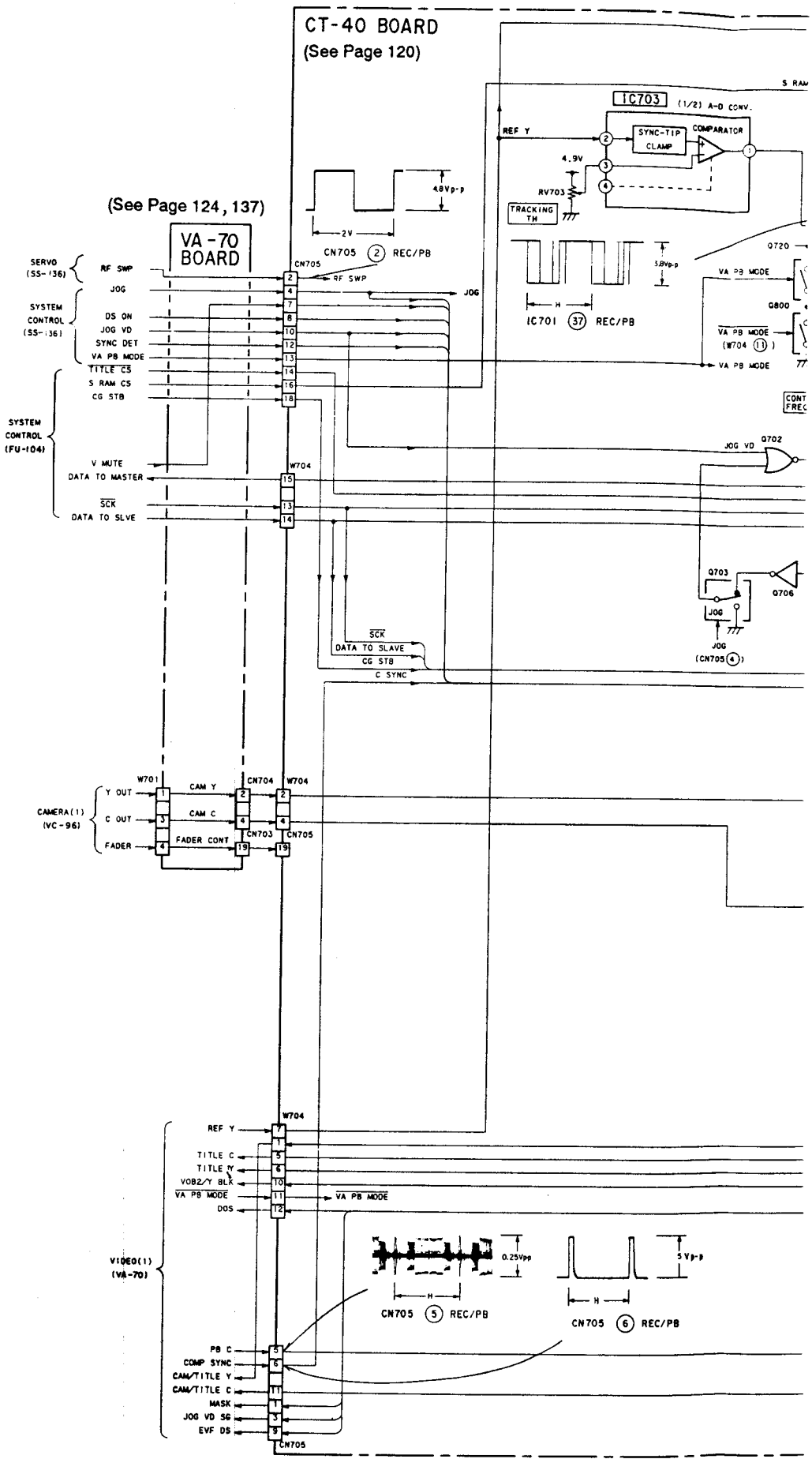

09

CT-40 BOARD

(See Page 120)

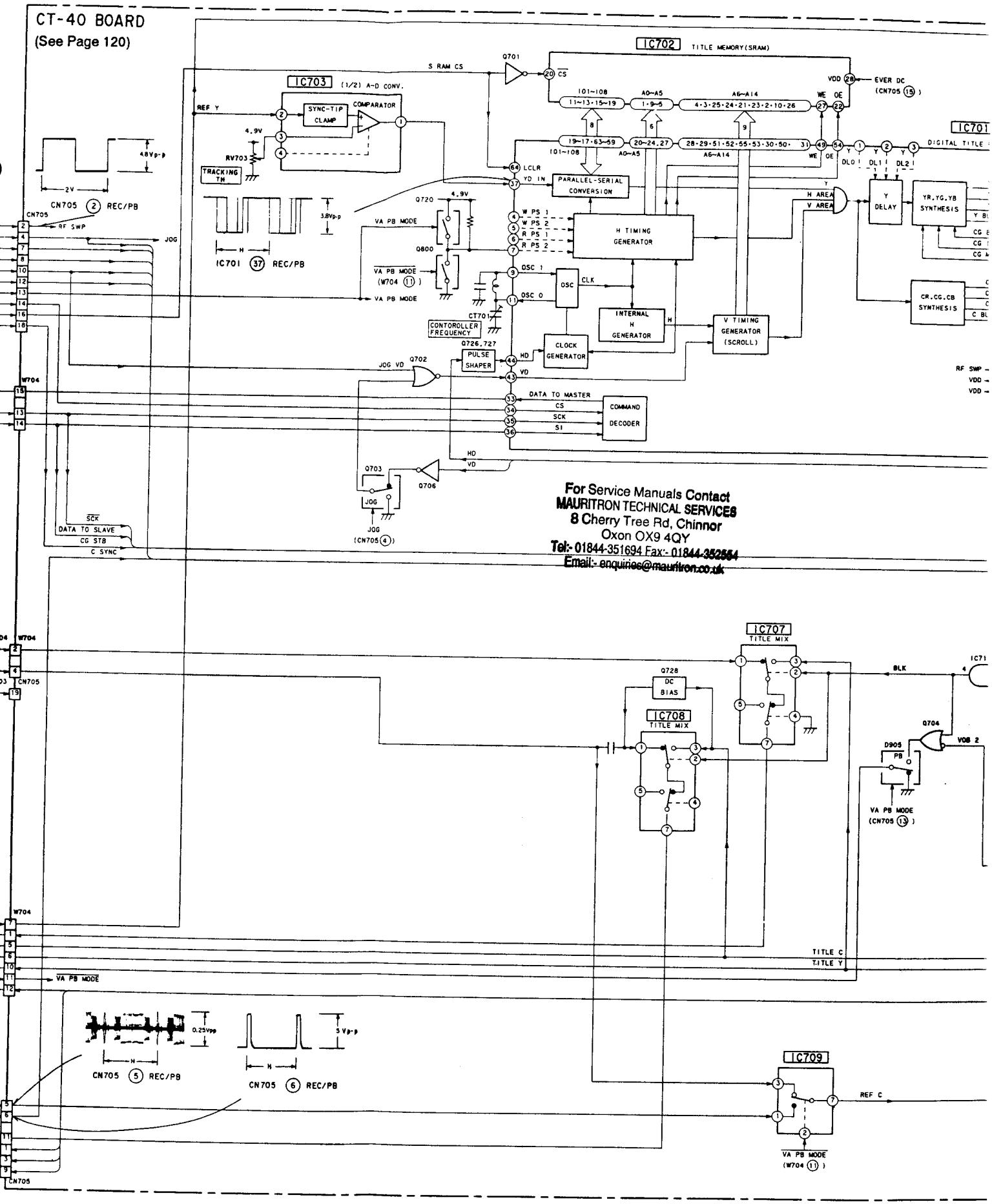

For Service Manuals Contact
MAURITRON TECHNICAL SERVICES
8 Cherry Tree Rd, Chinnor
Oxon OX9 4QY
Tel:- 01844-351694 Fax:- 01844-352554
Email:- enquiries@mauritron.co.uk

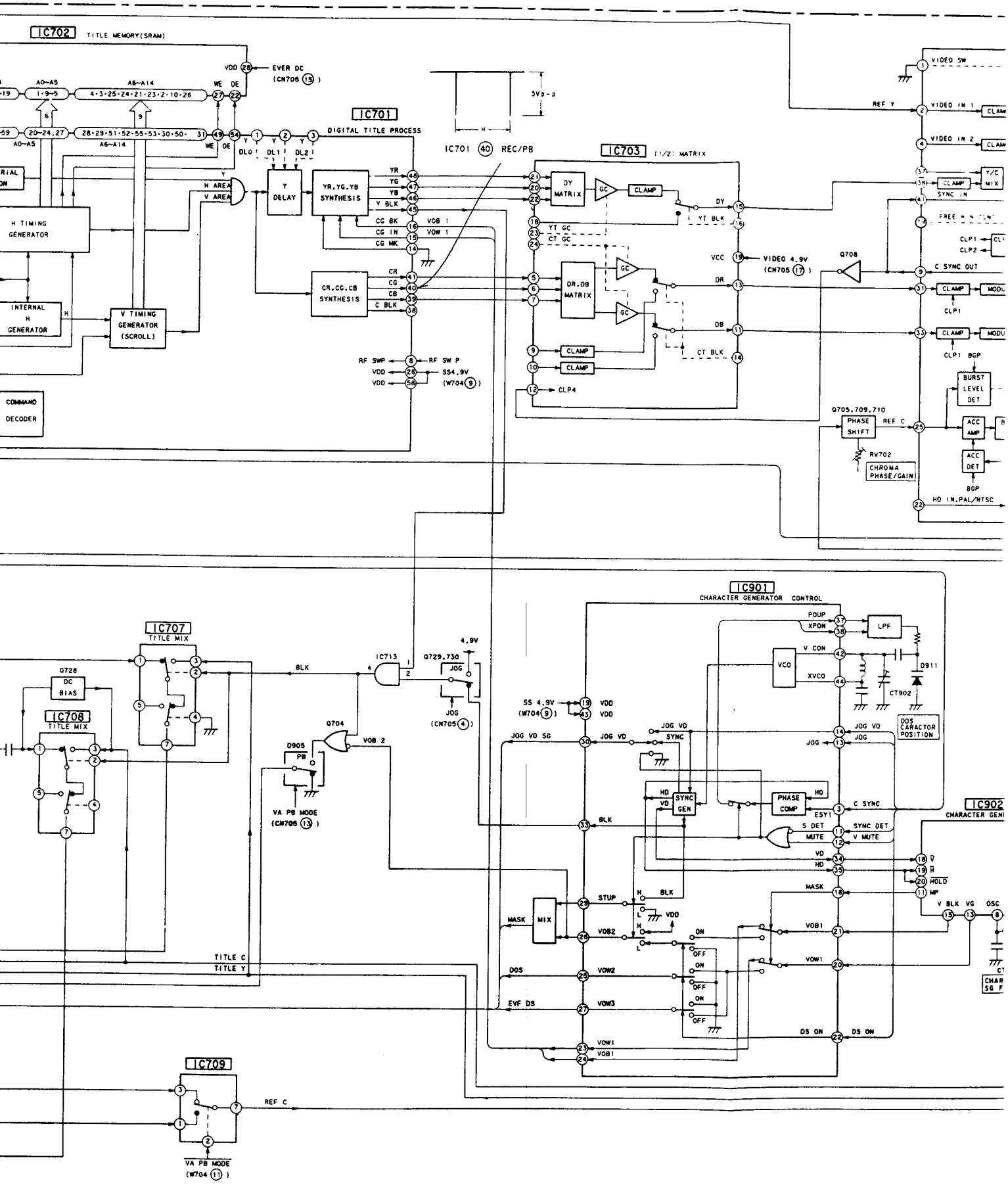
IC702
TITLE MEMORY(SRAM)
EVER DC
(CN705 15)
IC701
DIGITAL TITLE PROCESS
IC701 40 REC/PB
5Vp-p
IC703
(1/2) MATRIX
H TIMING GENERATOR
INTERNAL H GENERATOR
V TIMING GENERATOR (SCROLL)
Y DELAY
YR,YG,YB SYNTHESIS
CR,CG,CB SYNTHESIS
DY MATRIX
DR,DB MATRIX
CLAMP
VIDEO 4.9V
(CN705 17)
Q708
VIDEO SW
VIDEO IN 1
VIDEO IN 2
Y/C MIX
SYNC IN
C SYNC OUT
BURST LEVEL DET
Q705,709,710
PHASE SHIFT
RV702
CHROMA PHASE/GAIN
ACC AMP
ACC DET
HD IN,PAL/NTSC
COMMAND DECODER
IC901
CHARACTER GENERATOR CONTROL
LPF
VCO
D911
CT902
DOS CARACTOR POSITION
SYNC GEN
PHASE COMP
IC902
IC707
TITLE MIX
IC708
TITLE MIX
Q728
DC BIAS
IC713
Q729,730
JOG
(CN705 4)
Q704
D905
VA PB MODE
(CN705 13)
MIX
TITLE C
TITLE Y
IC709
VA PB MODE
(W704 11)
REF C

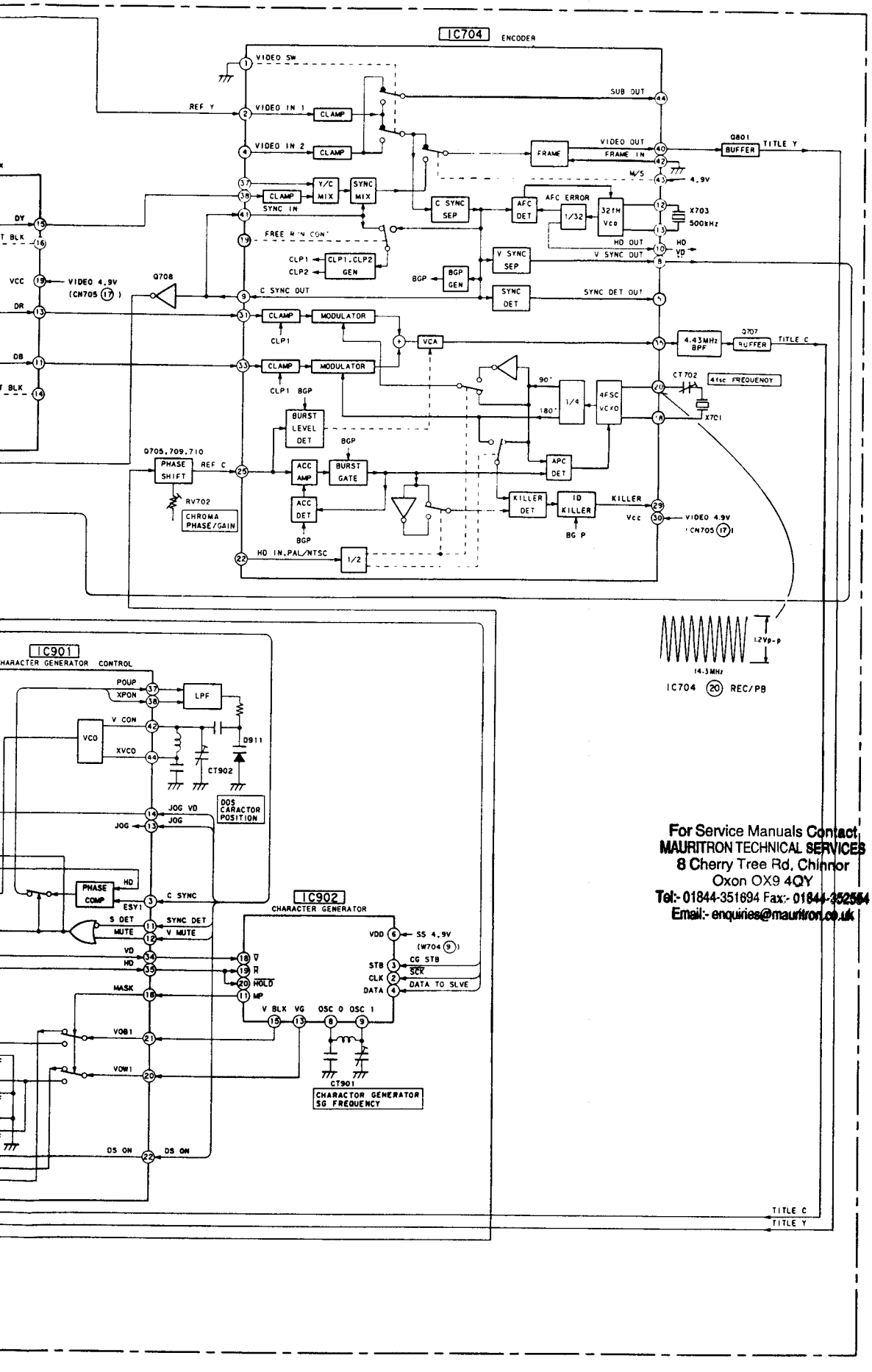

For Service Manuals Contact,
MAURITRON TECHNICAL SERVICES
8 Cherry Tree Rd, Chinnor
Oxon OX9 4QY
Tel:- 01844-351694 Fax:- 01844-352554
Email:- enquiries@mauritron.co.uk

3-7. VIDEO (1) BLOCK DIAGRAM

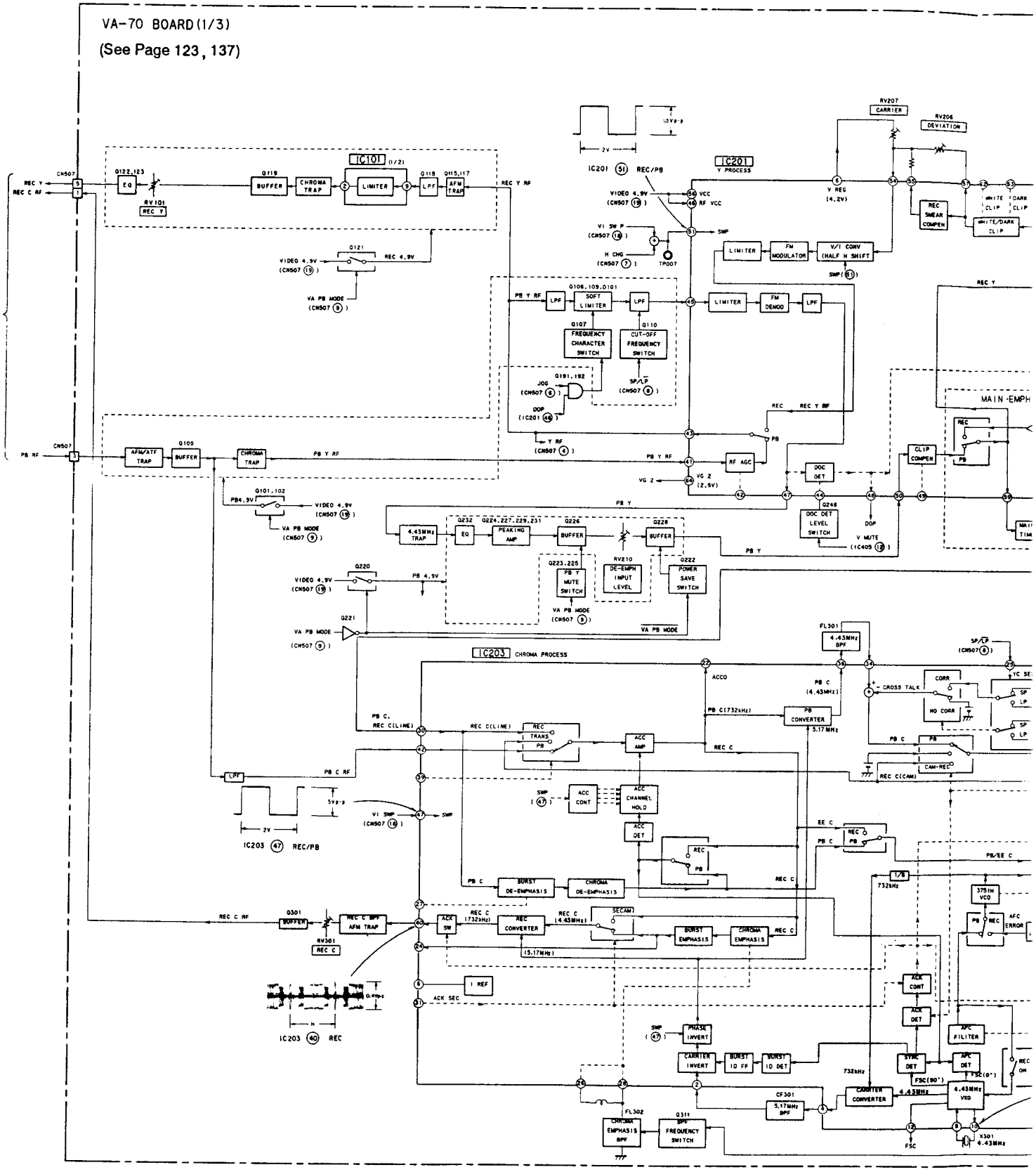

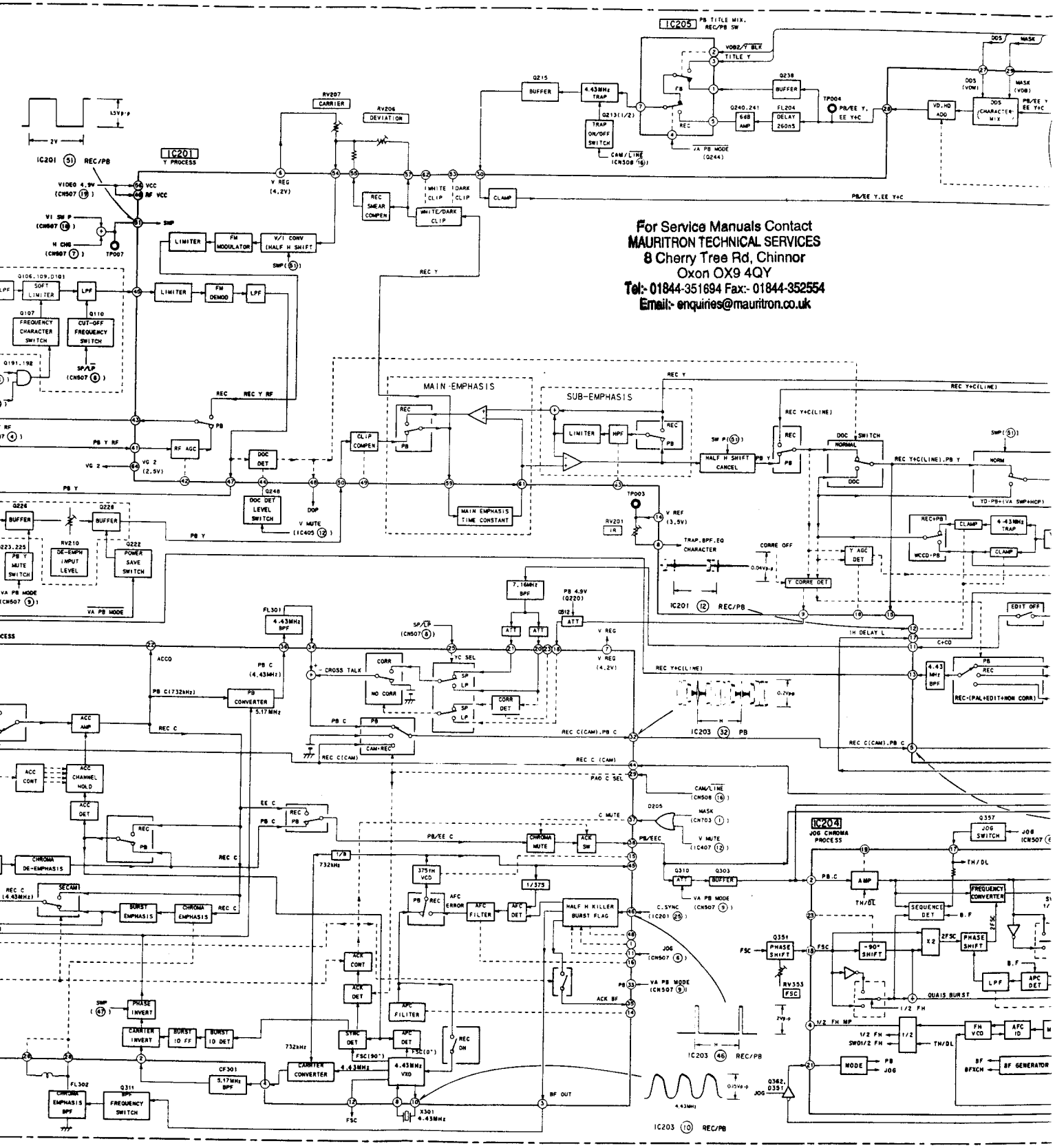
IC205 PB TITLE MIX. REC/PB SW
IC201 Y PROCESS
IC201 (51) REC/PB
MAIN-EMPHASIS
SUB-EMPHASIS
IC201 (12) REC/PB
IC203 (32) PB
IC203 (46) REC/PB
IC203 (10) REC/PB
IC204 JOG CHROMA PROCESS
For Service Manuals Contact
MAURITRON TECHNICAL SERVICES
8 Cherry Tree Rd, Chinnor
Oxon OX9 4QY
Tel:- 01844-351694 Fax:- 01844-352554
Email:- enquiries@mauritron.co.uk

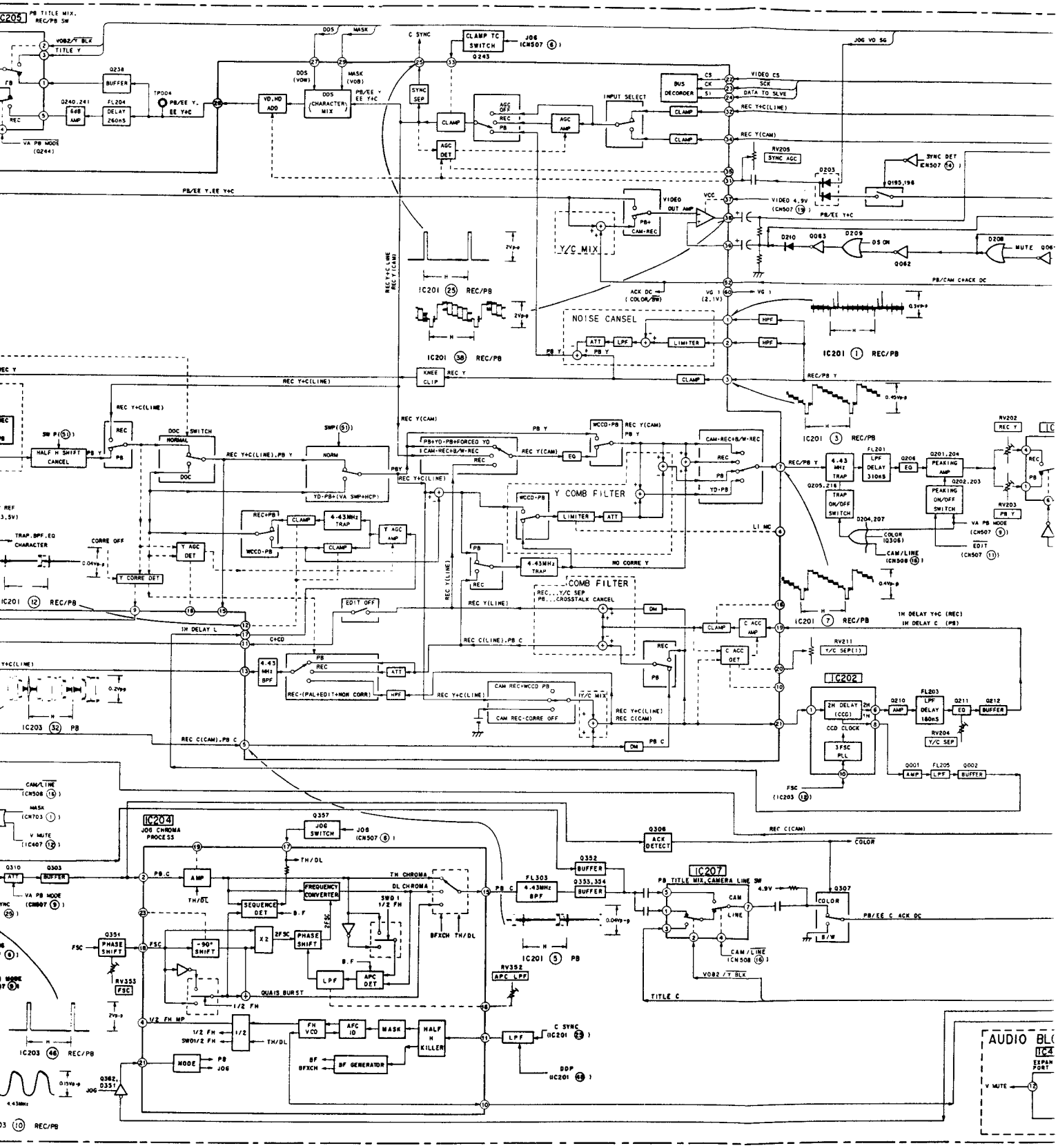
IC205
PB TITLE MIX, REC/PB SW
CLAMP TC SWITCH
Q243
J06 (CN507 6)
JOG VD SG
BUS DECORDER
VIDEO CS
SCK
DATA TO SLVE
REC Y+C(LINE)
REC Y(CAM)
INPUT SELECT
SYNC SEP
CLAMP
AGC AMP
AGC DET
VD,HD ADD
DDS CHARACTER MIX
BUFFER
DELAY 260nS
6dB AMP
VA PB MODE (Q244)
PB/EE Y,EE Y+C
RV205 SYNC AGC
SYNC DET (CN507 14)
VIDEO OUT AMP
VIDEO 4.9V (CN507 19)
Y/C MIX
PB+ CAM-REC
MUTE
PB/CAM C+ACK DC
IC201 25 REC/PB
IC201 38 REC/PB
NOISE CANSEL
ATT
LPF
LIMITER
HPF
IC201 1 REC/PB
KNEE CLIP
REC Y+C(LINE)
REC/PB Y
IC201 3 REC/PB
HALF H SHIFT CANCEL
NORMAL
NORM
YD-PB+(VA SWP+HCP)
PB+YD-PB+FORCED YD
CAM-REC+B/W-REC
WCCD-PB
EQ
Y COMB FILTER
4.43MHz TRAP
Y AGC AMP
Y AGC DET
Y CORRE DET
TRAP,BPF,EQ CHARACTER
CORRE OFF
NO CORRE Y
COMB FILTER
REC...Y/C SEP
PB...CROSSTALK CANCEL
EDIT OFF
IC201 12 REC/PB
IC201 7 REC/PB
IH DELAY L
IH DELAY Y+C (REC)
IH DELAY C (PB)
C ACC AMP
C ACC DET
RV211 Y/C SEP(1)
4.43 MHz BPF
REC-(PAL+EDIT+NON CORR)
CAM REC+WCCD PB
CAM REC-CORRE OFF
IC202
2H DELAY (CCD)
CCD CLOCK
3FSC PLL
FL203 LPF DELAY 180nS
RV204 Y/C SEP
IC203 32 PB
IC204
JOG CHROMA PROCESS
Q357 JOG SWITCH
Q306 ACK DETECT
Q352 BUFFER
Q353,354 BUFFER
IC207
PB TITLE MIX,CAMERA LINE SW
Q307 COLOR
PB/EE C ACK DC
FL303 4.43MHz BPF
IC201 5 PB
FREQUENCY CONVERTER
SEQUENCE DET
PHASE SHIFT
-90° SHIFT
X2
APC DET
QUAIS BURST
RV352 APC LPF
FH VCO
AFC ID
MASK
HALF H KILLER
BF GENERATOR
MODE
C SYNC (IC201 25)
DDP (IC201 48)
IC203 46 REC/PB
IC203 10 REC/PB
AUDIO BL
V MUTE

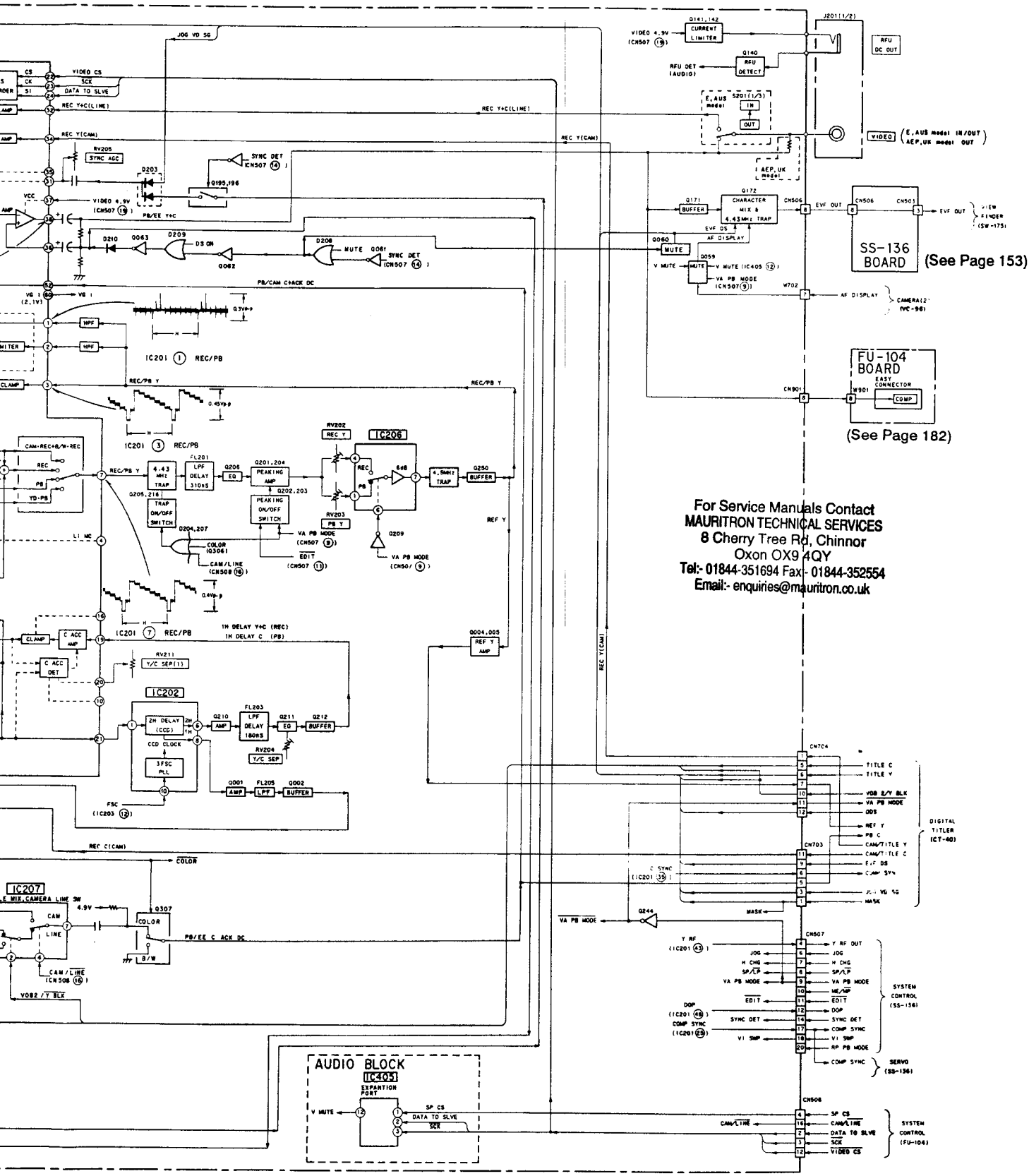

For Service Manuals Contact
MAURITRON TECHNICAL SERVICES
8 Cherry Tree Rd, Chinnor
Oxon OX9 4QY
Tel:- 01844-351694 Fax- 01844-352554
Email:- enquiries@mauritron.co.uk

3-8. VIDEO (2) BLOCK DIAGRAM

For Service Manuals Contact
MAURITRON TECHNICAL SERVICES
8 Cherry Tree Rd, Chinnor
Oxon OX9 4QY
Tel:- 01844-351694 Fax:- 01844-352554
Email:- enquiries@mauritron.co.uk

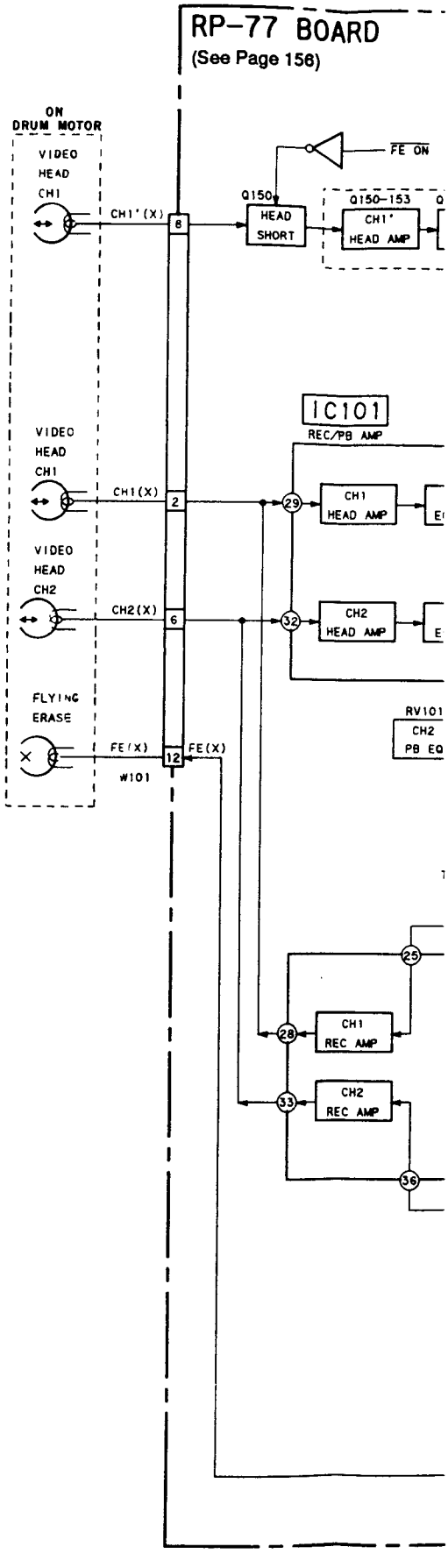

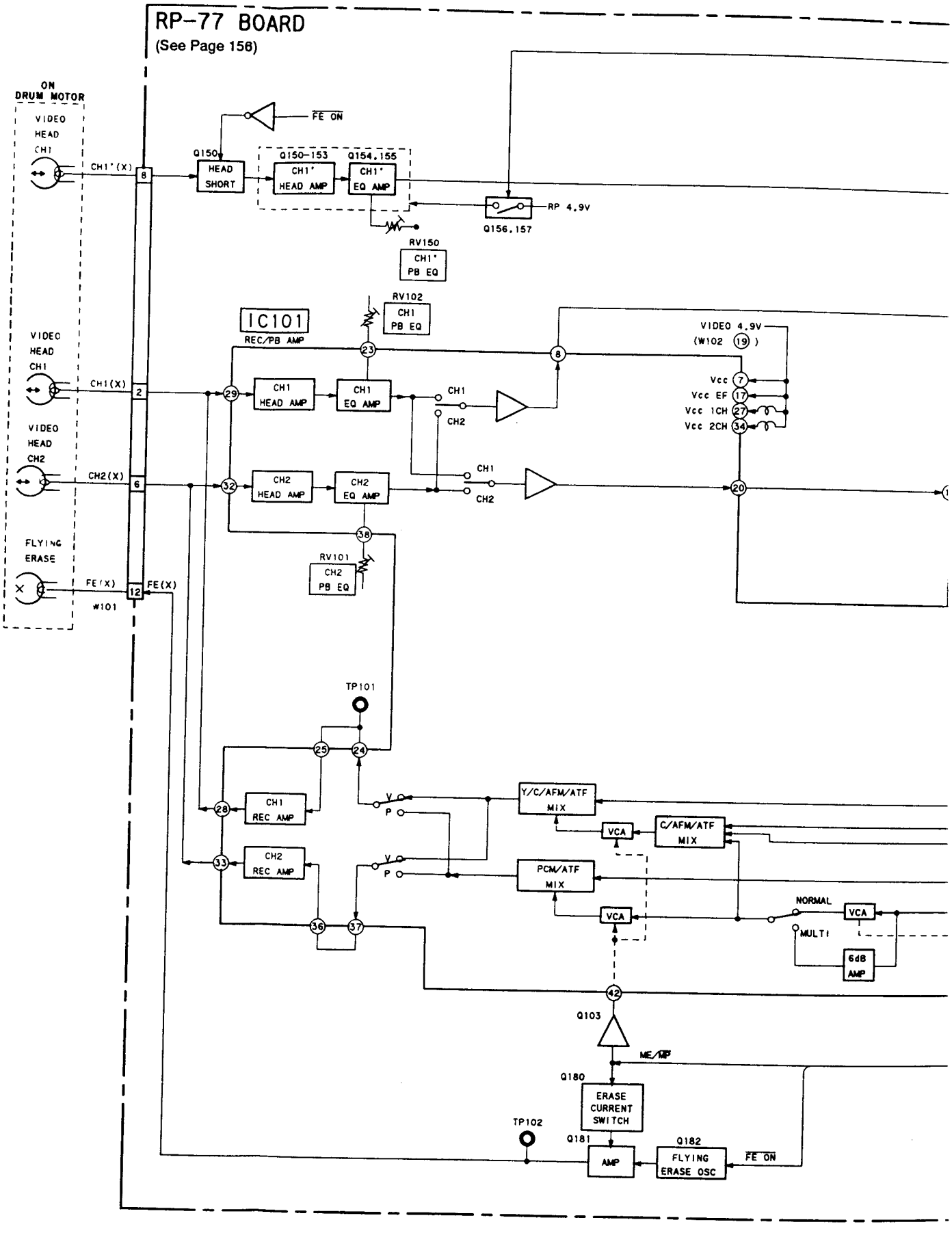
RP-77 BOARD
(See Page 156)
ON DRUM MOTOR
VIDEO HEAD CH1
CH1'(X)
8
FE ON
Q150
HEAD SHORT
Q150-153
CH1' HEAD AMP
Q154,155
CH1' EQ AMP
RP 4.9V
Q156,157
RV150
CH1' PB EQ
IC101
REC/PB AMP
RV102
CH1 PB EQ
VIDEO HEAD CH1
CH1(X)
2
29
CH1 HEAD AMP
CH1 EQ AMP
CH1
CH2
23
8
VIDEO 4.9V
(W102 19)
Vcc 7
Vcc EF 17
Vcc 1CH 27
Vcc 2CH 34
VIDEO HEAD CH2
CH2(X)
6
32
CH2 HEAD AMP
CH2 EQ AMP
20
38
RV101
CH2 PB EQ
FLYING ERASE
FE'(X)
12
FE(X)
W101
TP101
25
24
28
CH1 REC AMP
33
CH2 REC AMP
V
P
Y/C/AFM/ATF MIX
VCA
C/AFM/ATF MIX
PCM/ATF MIX
NORMAL
MULTI
6dB AMP
36
37
42
Q103
ME/MP
Q180
ERASE CURRENT SWITCH
TP102
Q181
AMP
Q182
FLYING ERASE OSC
FE ON
09

For Service Manuals Contact
MAURITRON TECHNICAL SERVICES
8 Cherry Tree Rd, Chinnor
Oxon OX9 4QY
Tel:- 01844-351694 Fax:- 01844-352554
Email:- enquiries@mauritron.co.uk

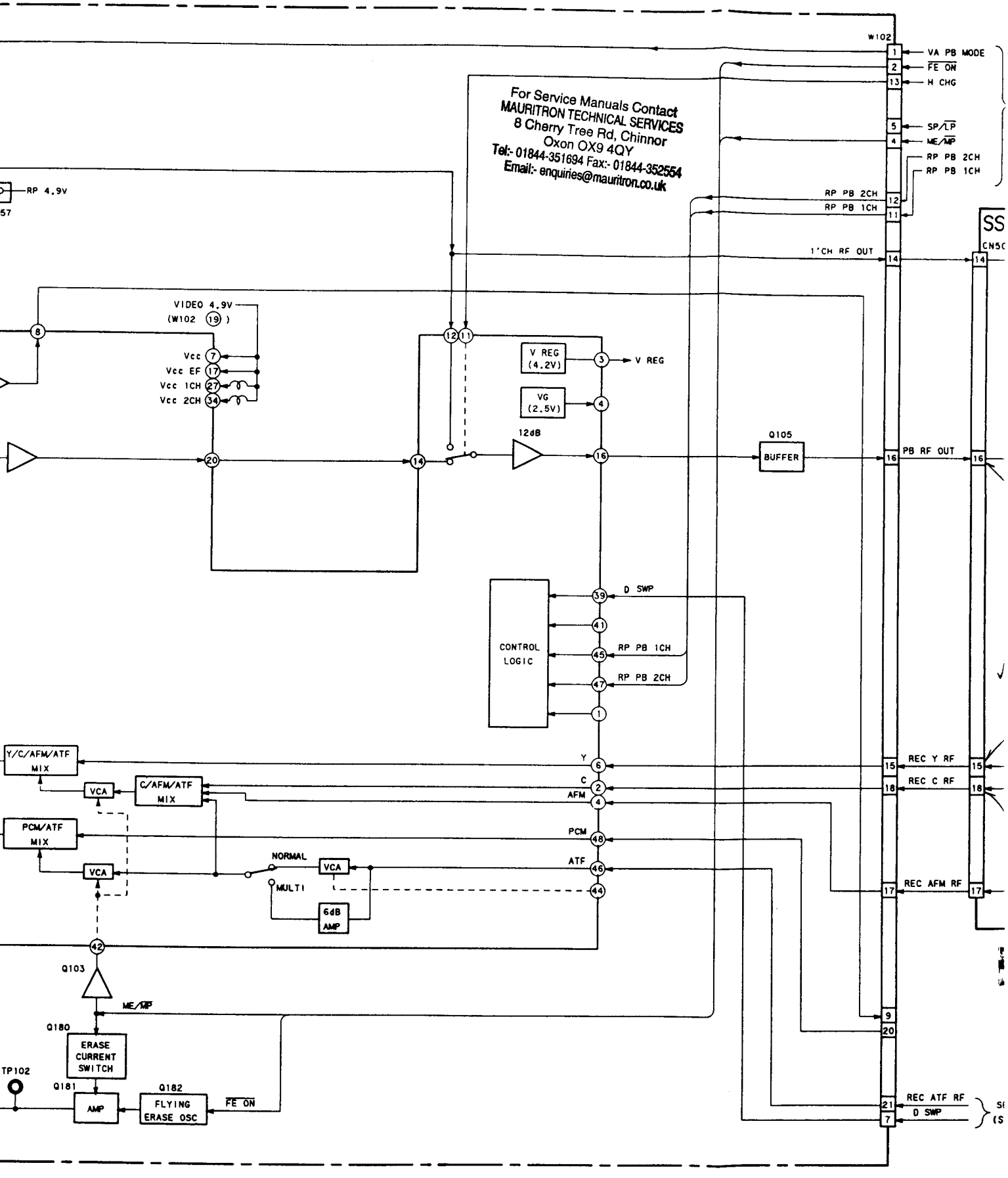

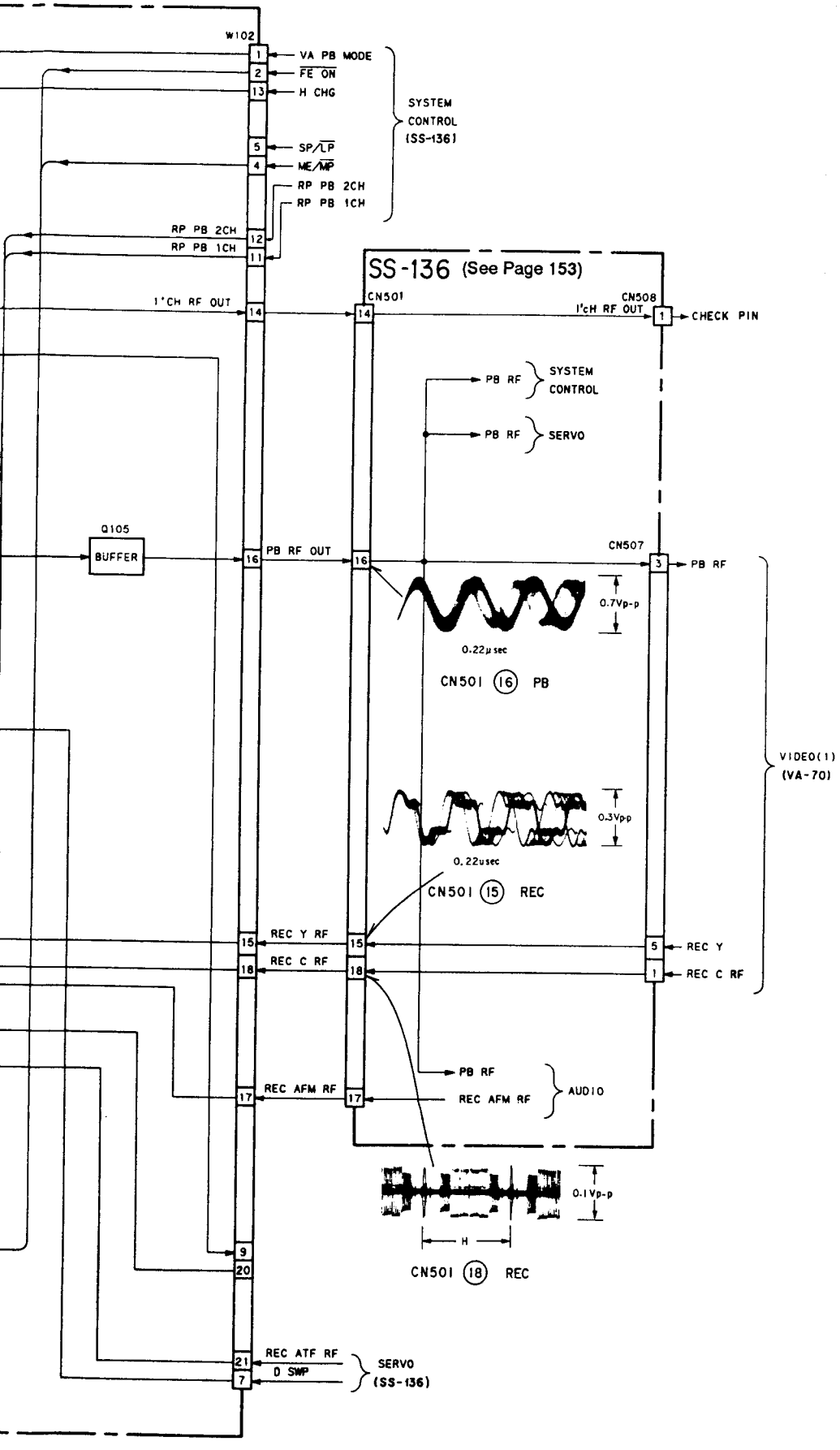
W102
1 VA PB MODE
2 FE ON
13 H CHG
SYSTEM CONTROL (SS-136)
5 SP/LP
4 ME/MP
RP PB 2CH
RP PB 1CH
RP PB 2CH 12
RP PB 1CH 11
SS-136 (See Page 153)
1'CH RF OUT 14
CN501
14
CN508
1'cH RF OUT 1
CHECK PIN
PB RF
SYSTEM CONTROL
PB RF
SERVO
Q105
BUFFER
16 PB RF OUT
16
CN507
3 PB RF
0.7Vp-p
0.22μsec
CN501 (16) PB
VIDEO(1) (VA-70)
0.3Vp-p
0.22μsec
CN501 (15) REC
15 REC Y RF
15
5 REC Y
18 REC C RF
18
1 REC C RF
PB RF
17 REC AFM RF
17
REC AFM RF
AUDIO
0.1Vp-p
H
CN501 (18) REC
9
20
21 REC ATF RF
7 D SWP
SERVO (SS-136)

3-9. SERVO BLOCK DIAGRAM

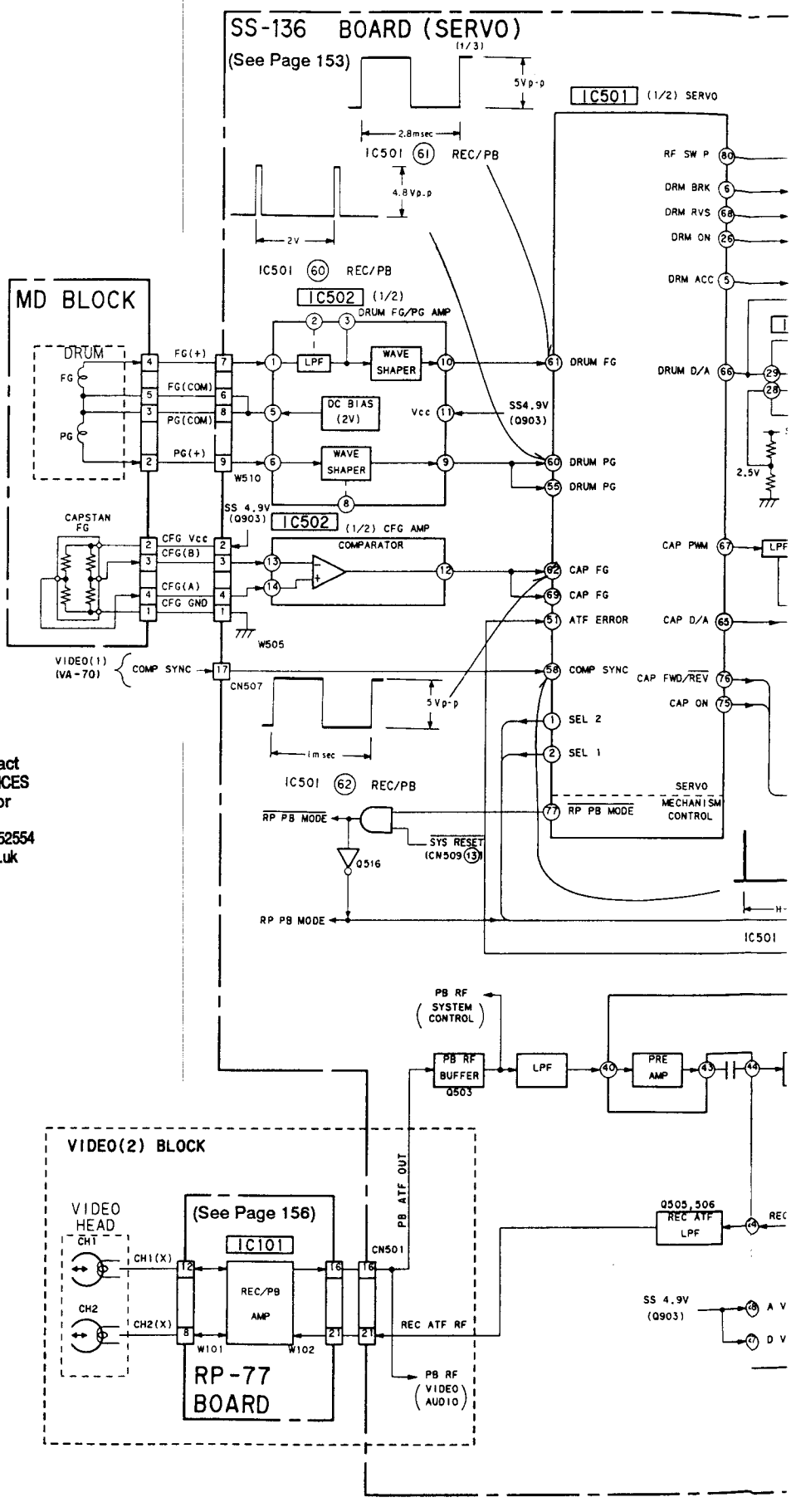

For Service Manuals Contact
MAURITRON TECHNICAL SERVICES
8 Cherry Tree Rd, Chinnor
Oxon OX9 4QY
Tel:- 01844-351694 Fax:- 01844-352554
Email:- enquiries@mauritron.co.uk

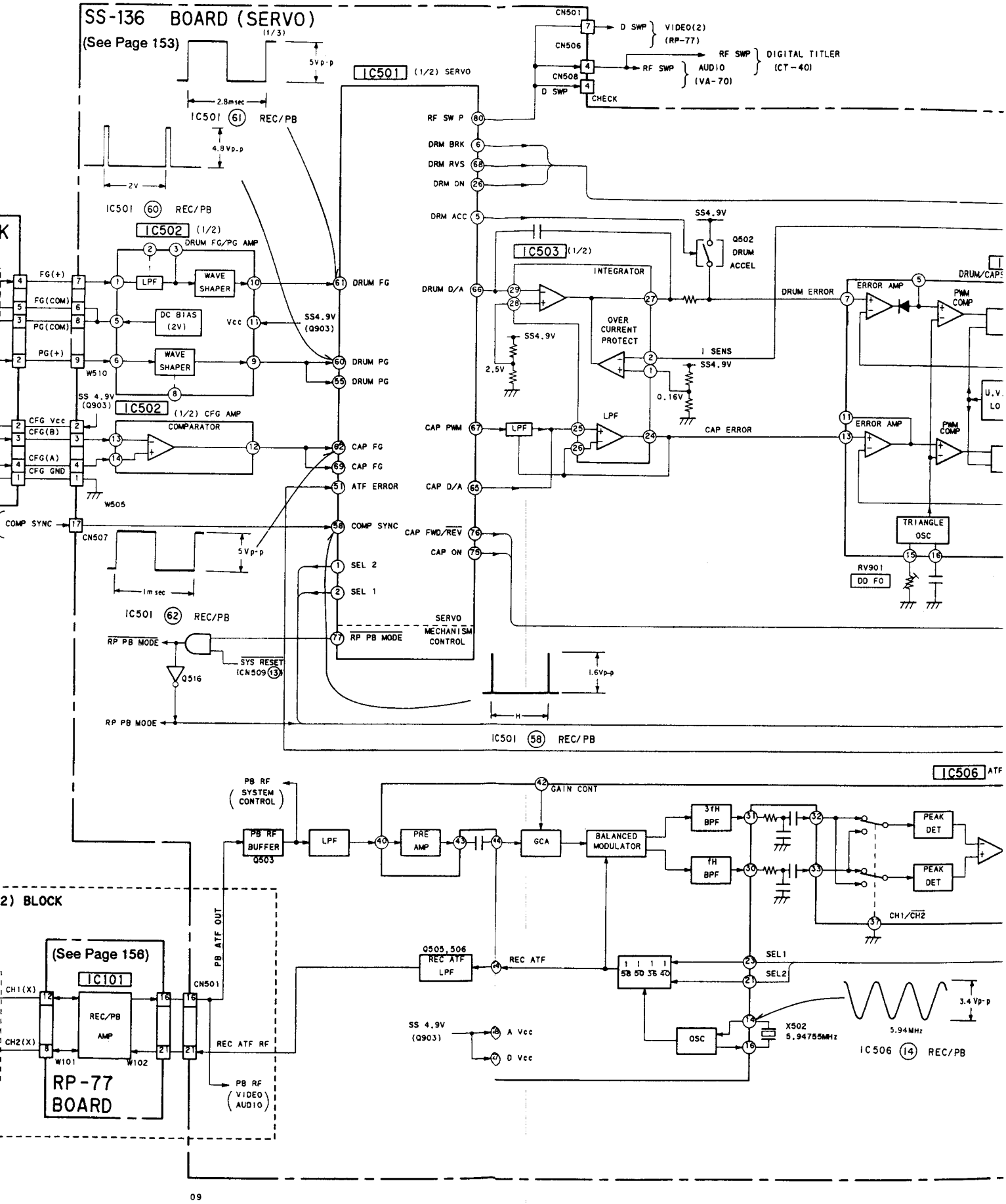
SS-136 BOARD (SERVO)
(See Page 153)
IC501 (1/2) SERVO
IC502 (1/2) DRUM FG/PG AMP
IC502 (1/2) CFG AMP
IC503 (1/2)
IC506 ATF
CN501
CN506
CN508
D SWP
VIDEO(2) (RP-77)
RF SWP
DIGITAL TITLER (CT-40)
AUDIO (VA-70)
CHECK
RF SW P
DRM BRK
DRM RVS
DRM ON
DRM ACC
Q502 DRUM ACCEL
INTEGRATOR
OVER CURRENT PROTECT
I SENS
DRUM D/A
DRUM ERROR
ERROR AMP
PWM COMP
DRUM/CAPS
CAP PWM
CAP D/A
CAP ERROR
TRIANGLE OSC
RV901 DD FO
FG(+)
FG(COM)
PG(COM)
PG(+)
LPF
WAVE SHAPER
DC BIAS (2V)
DRUM FG
DRUM PG
W510
W505
CFG Vcc
CFG(B)
CFG(A)
CFG GND
COMPARATOR
CAP FG
ATF ERROR
COMP SYNC
CN507
SEL 2
SEL 1
SERVO MECHANISM CONTROL
RP PB MODE
SYS RESET (CN509)
Q516
IC501 (61) REC/PB
IC501 (60) REC/PB
IC501 (62) REC/PB
IC501 (58) REC/PB
SS4.9V
SS4.9V (Q903)
2.5V
0.16V
5Vp-p
4.8Vp-p
2V
1msec
2.8msec
1.6Vp-p
H
PB RF (SYSTEM CONTROL)
PB RF BUFFER Q503
PRE AMP
GAIN CONT
GCA
BALANCED MODULATOR
3TH BPF
1H BPF
PEAK DET
CH1/CH2
Q505,506 REC ATF LPF
REC ATF
SEL1
SEL2
OSC
X502 5.94755MHz
5.94MHz
3.4 Vp-p
IC506 (14) REC/PB
SS 4.9V (Q903)
A Vcc
D Vcc
2) BLOCK
(See Page 156)
IC101
REC/PB AMP
CH1(X)
CH2(X)
W101
W102
PB ATF OUT
REC ATF RF
PB RF (VIDEO AUDIO)
RP-77 BOARD

09

RF SWP
10
70)
} DIGITAL TITLER (CT-40)

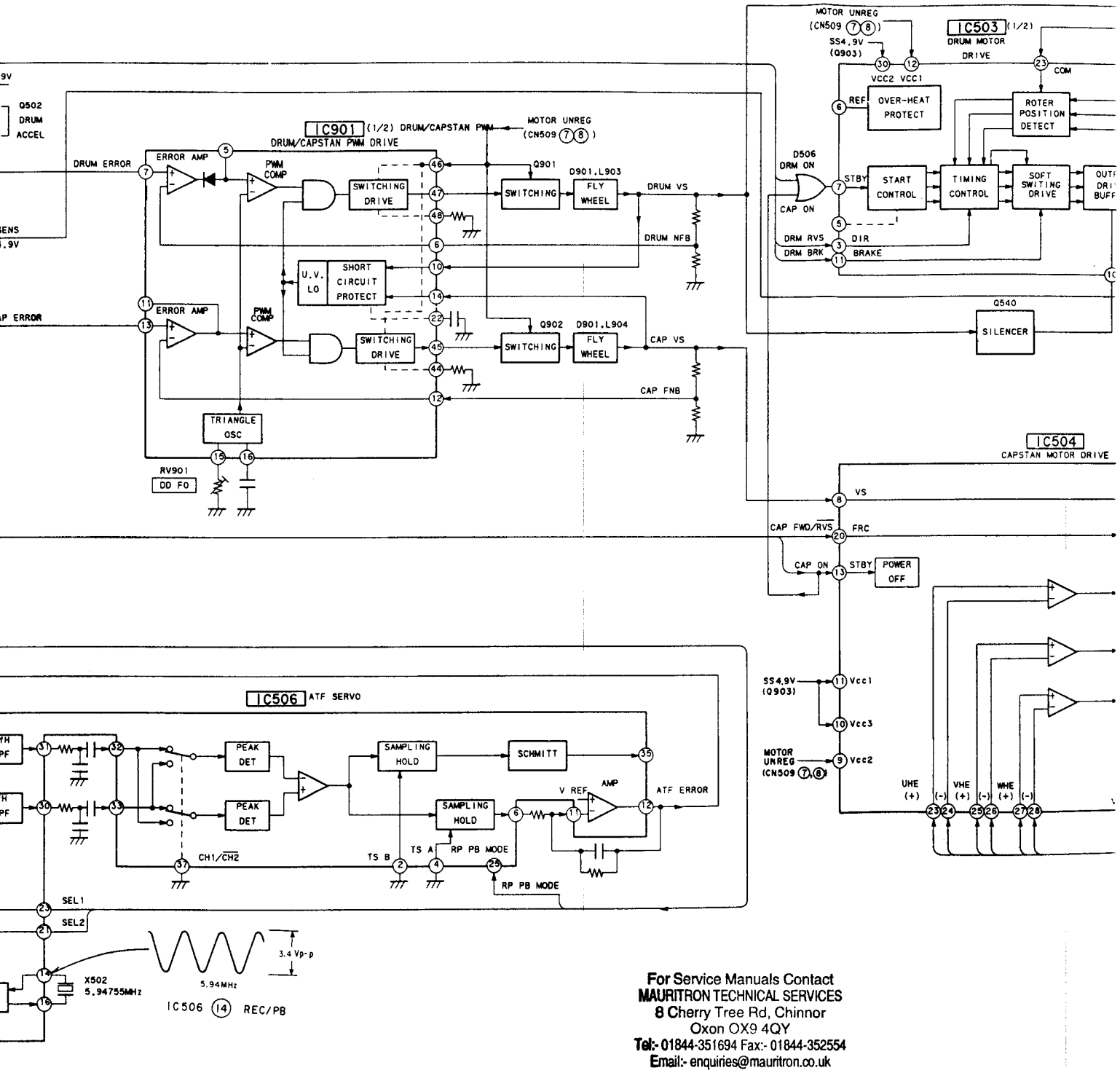

For Service Manuals Contact
MAURITRON TECHNICAL SERVICES
8 Cherry Tree Rd, Chinnor
Oxon OX9 4QY
Tel:- 01844-351694 Fax:- 01844-352554
Email:- enquiries@mauritron.co.uk

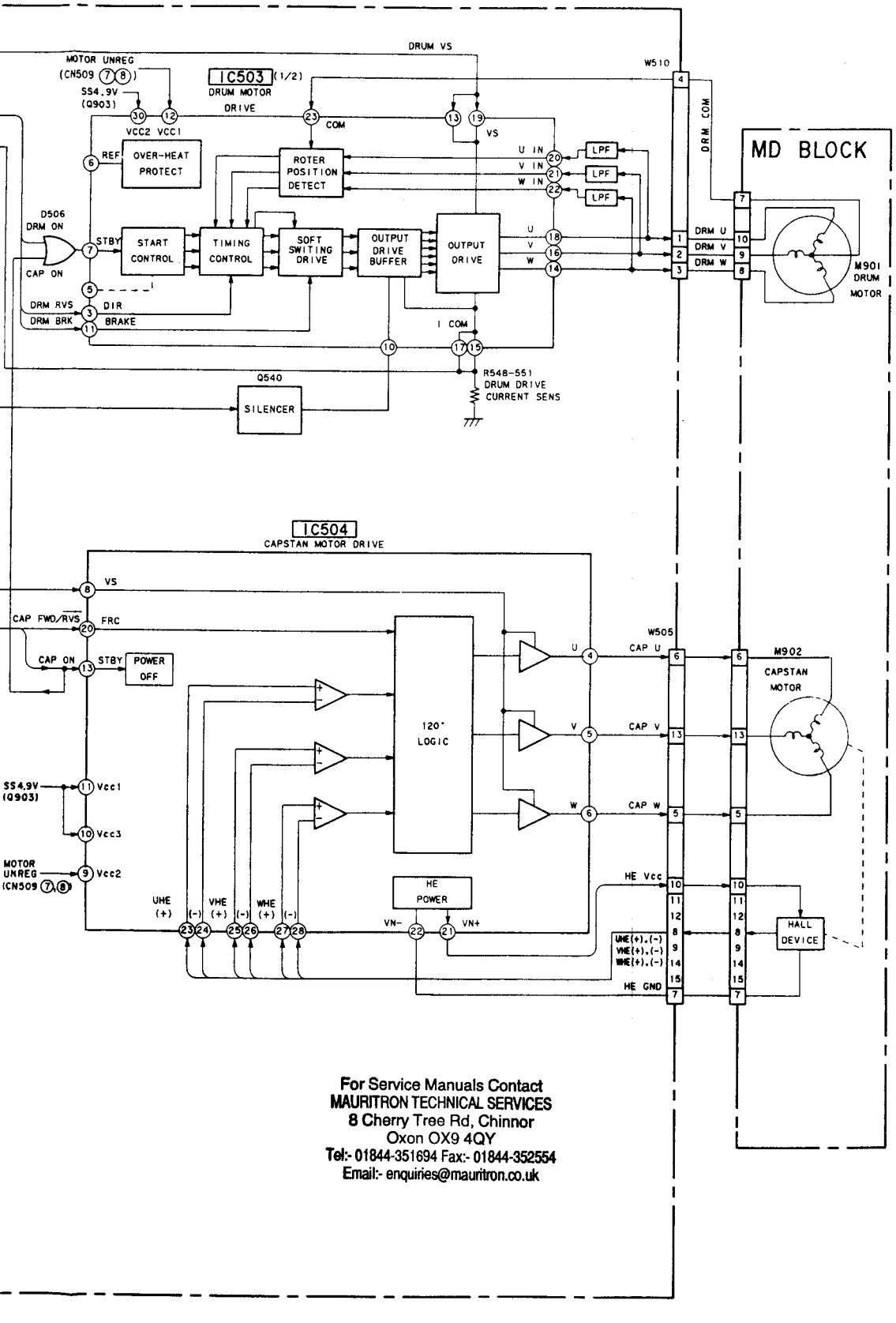

For Service Manuals Contact
MAURITRON TECHNICAL SERVICES
8 Cherry Tree Rd, Chinnor
Oxon OX9 4QY
Tel:- 01844-351694 Fax:- 01844-352554
Email:- enquiries@mauritron.co.uk

For Service Manuals Contact
MAURITRON TECHNICAL SERVICES
8 Cherry Tree Rd, Chinnor
Oxon OX9 4QY
Tel:- 01844-351694 Fax:- 01844-352554
Email:- enquiries@mauritron.co.uk

3-10. SYSTEM CONTROL BLOCK DIAGRAM

For Service Manuals Contact
MAURITRON TECHNICAL SERVICES
8 Cherry Tree Rd, Chinnor
Oxon OX9 4QY
Tel:- 01844-351694 Fax:- 01844-352554
Email:- enquiries@mauritron.co.uk

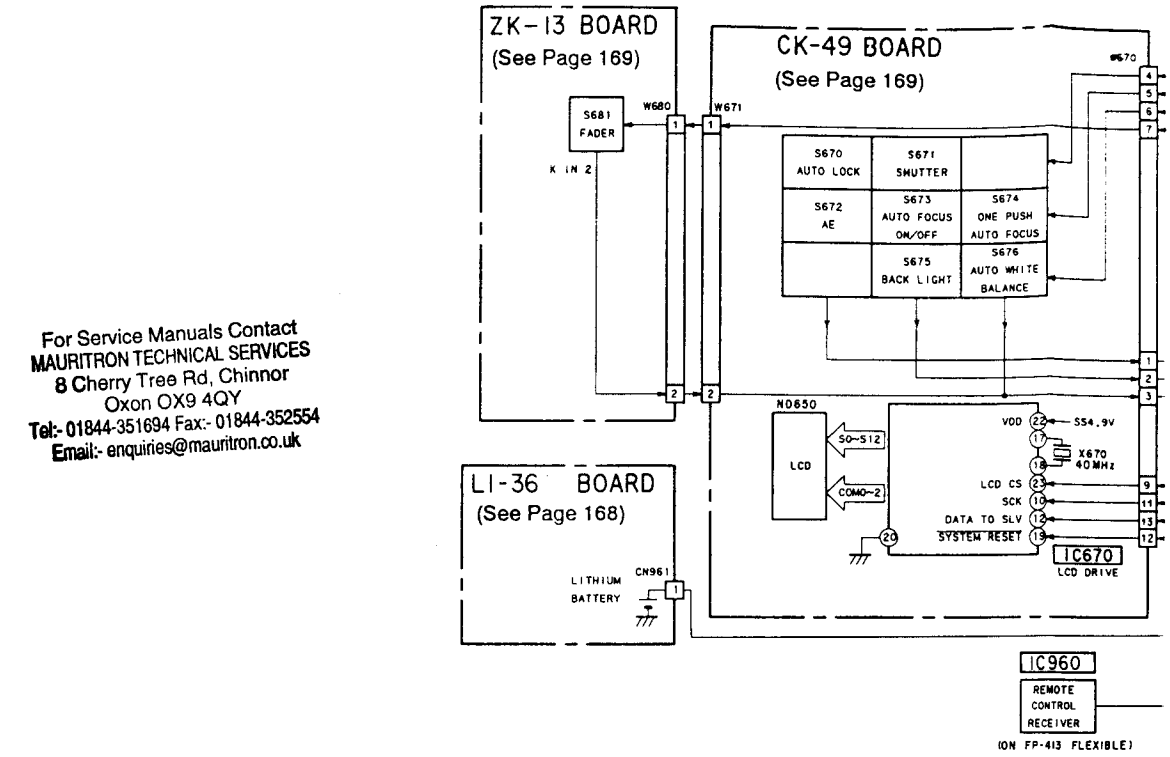

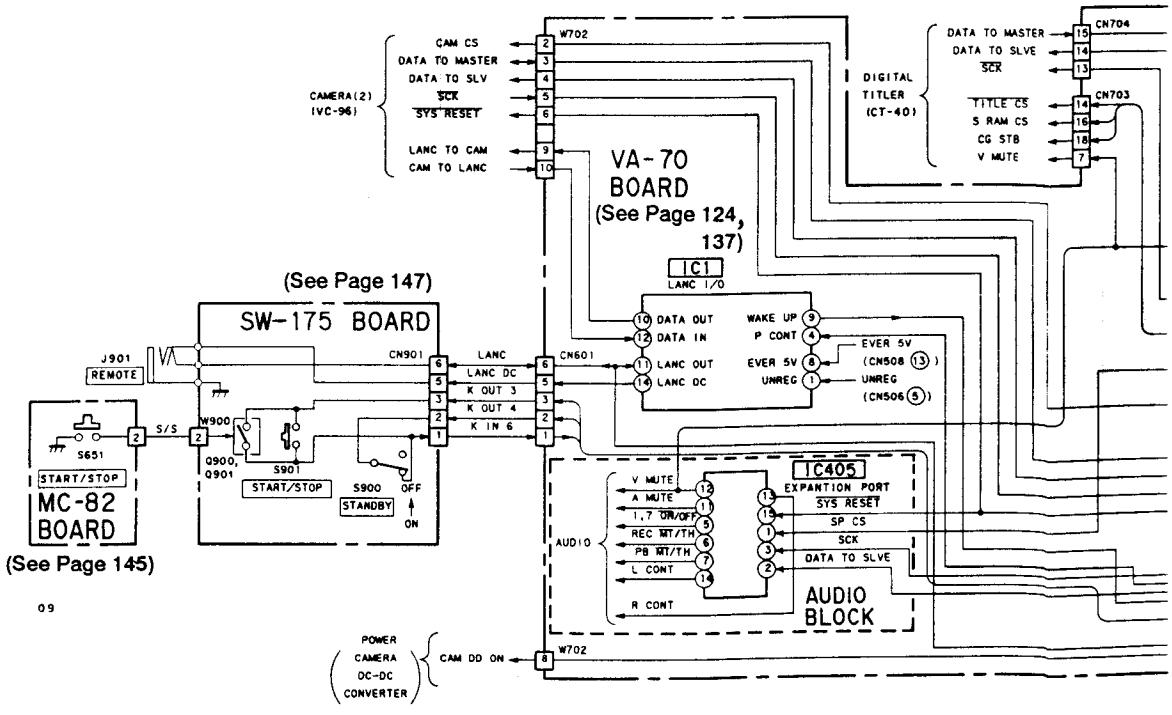

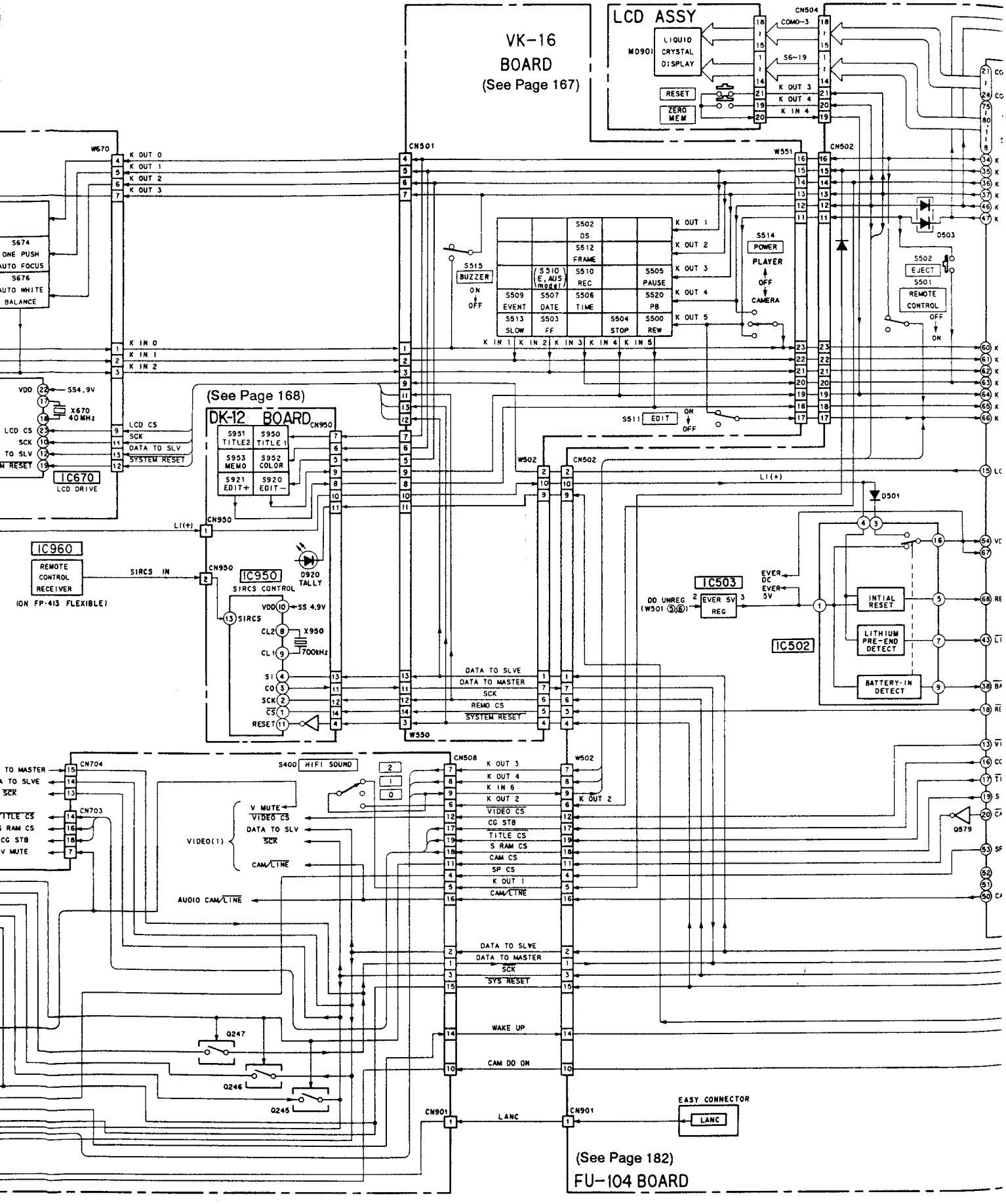
VK-16
BOARD
(See Page 167)
LCD ASSY
LIQUID CRYSTAL DISPLAY
MD901
RESET
ZERO MEM
CN504
COM0-3
S6~19
K OUT 3
K OUT 4
K IN 4
W670
K OUT 0
K OUT 1
K OUT 2
K OUT 3
CN501
W551
CN502
S674
ONE PUSH
AUTO FOCUS
S676
AUTO WHITE
BALANCE
S502 DS
S512 FRAME
S510 REC
S505 PAUSE
S509 EVENT
S507 DATE
S506 TIME
S520 PB
S513 SLOW
S503 FF
S504 STOP
S500 REW
S510 E.AUS mode
K OUT 1
K OUT 2
K OUT 3
K OUT 4
K OUT 5
K IN 1
K IN 2
K IN 3
K IN 4
K IN 5
S515 BUZZER
ON
OFF
S514 POWER
PLAYER
CAMERA
D503
S502 EJECT
S501 REMOTE CONTROL
K IN 0
K IN 1
K IN 2
VDD
SS4.9V
X670 40MHz
LCD CS
SCK
DATA TO SLV
SYSTEM RESET
IC670
LCD DRIVE
(See Page 168)
DK-12 BOARD CN950
S951 TITLE2
S950 TITLE 1
S953 MEMO
S952 COLOR
S921 EDIT+
S920 EDIT−
S511 EDIT
W502
CN502
LI(+)
D501
IC960
REMOTE CONTROL RECEIVER
(ON FP-413 FLEXIBLE)
SIRCS IN
CN950
IC950
SIRCS CONTROL
D920 TALLY
VDD
SS 4.9V
SIRCS
CL2
X950
CL1
700kHz
SI
CO
SCK
CS
RESET
IC503
DD UNREG (W501 ⑤,⑥)
EVER 5V REG
EVER DC EVER 5V
IC502
INTIAL RESET
LITHIUM PRE-END DETECT
BATTERY-IN DETECT
DATA TO SLVE
DATA TO MASTER
SCK
REMO CS
SYSTEM RESET
W550
CN704
CN703
S400 HIFI SOUND
CN508
W502
V MUTE
VIDEO CS
DATA TO SLV
SCK
VIDEO(1)
CAM/LINE
AUDIO CAM/LINE
K OUT 3
K OUT 4
K IN 6
K OUT 2
VIDEO CS
CG STB
TITLE CS
S RAM CS
CAM CS
SP CS
K OUT 1
CAM/LINE
DATA TO SLVE
DATA TO MASTER
SCK
SYS RESET
WAKE UP
CAM DD ON
Q247
Q246
Q245
Q579
CN901
LANC
EASY CONNECTOR
LANC
(See Page 182)
FU-104 BOARD

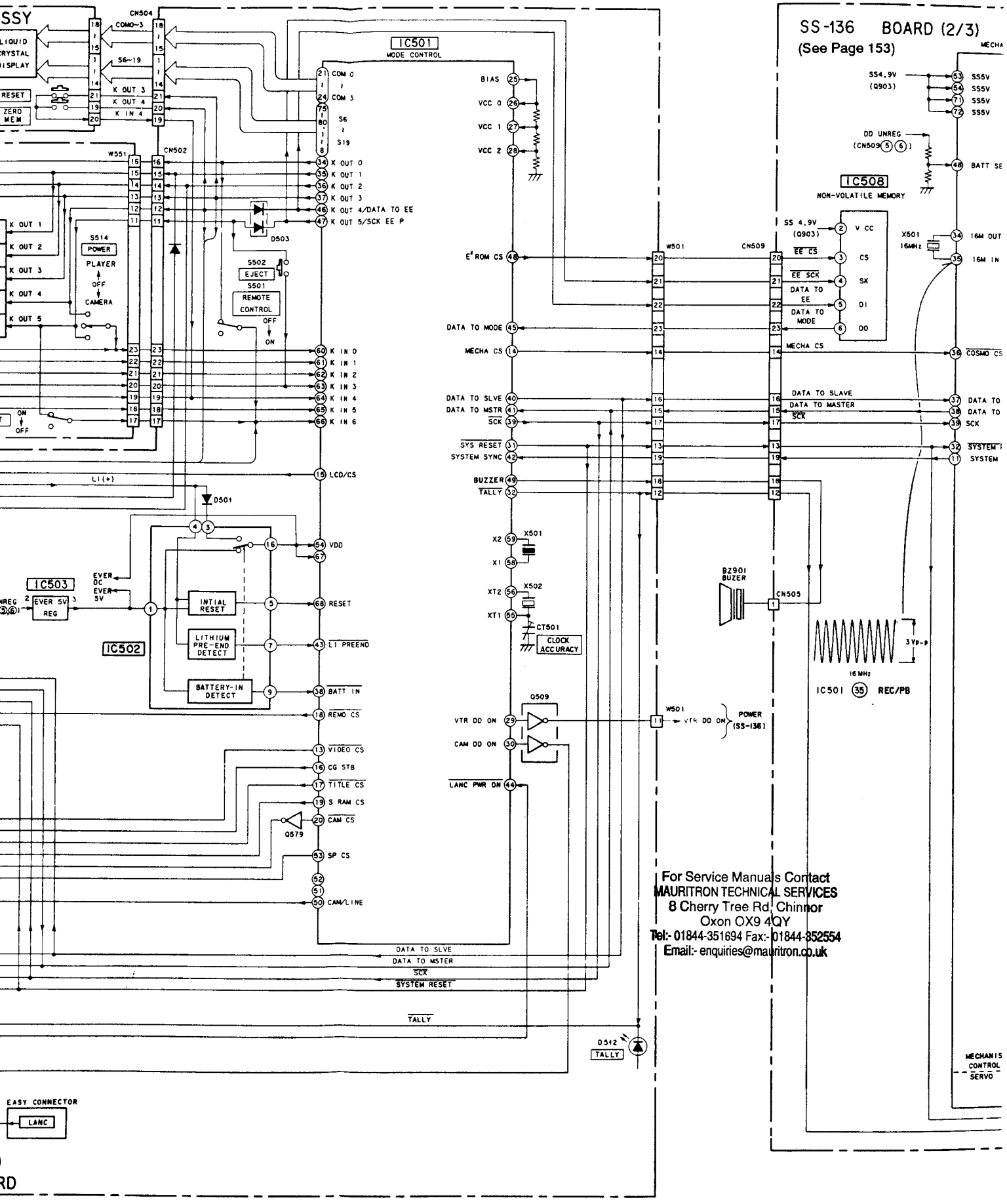

For Service Manuals Contact
MAURITRON TECHNICAL SERVICES
8 Cherry Tree Rd, Chinnor
Oxon OX9 4QY
Tel:- 01844-351694 Fax:- 01844-352554
Email:- enquiries@mauritron.co.uk

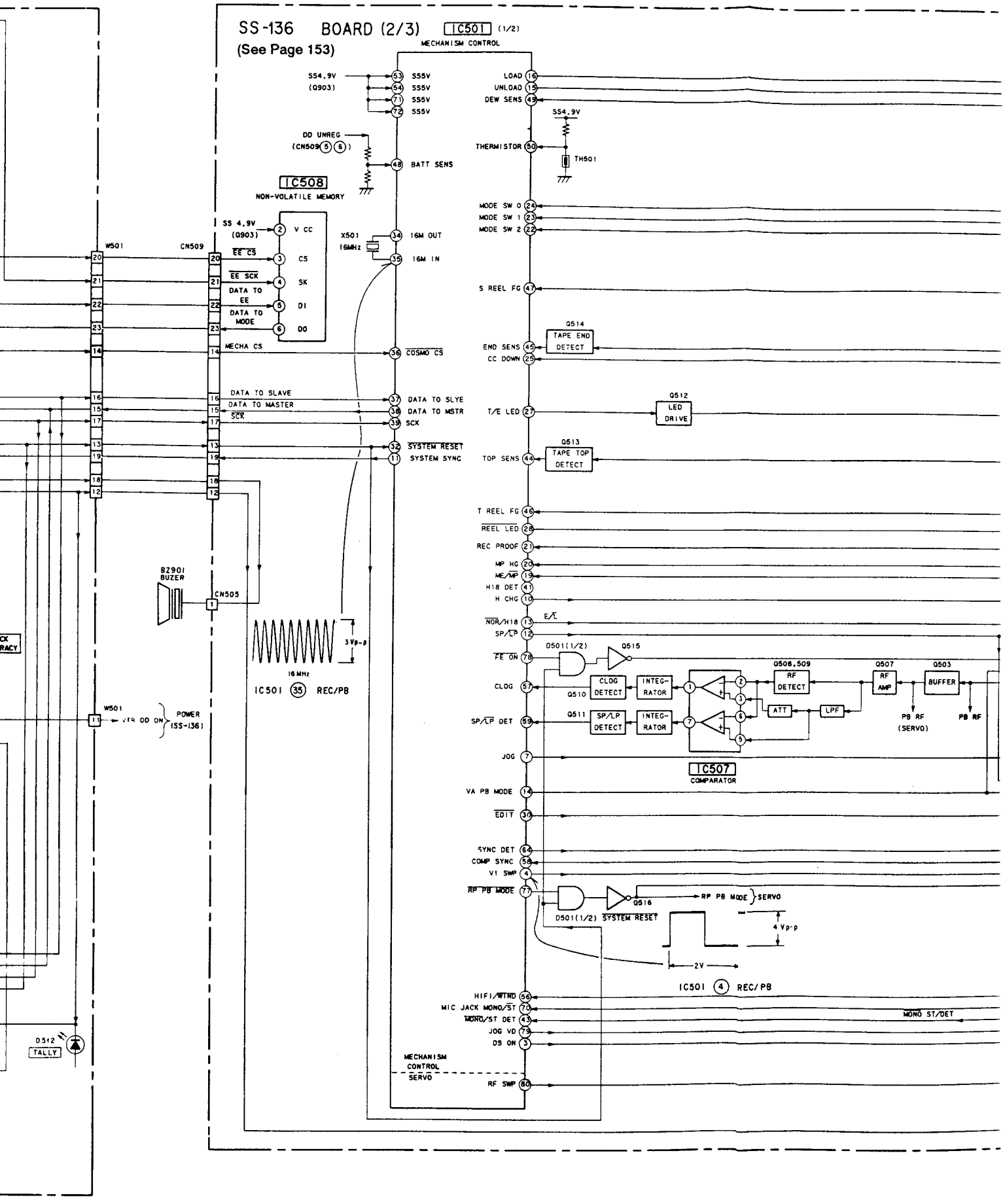
SS-136 BOARD (2/3) IC501 (1/2)
(See Page 153)
MECHANISM CONTROL
SS4.9V (Q903)
SS5V
DD UNREG (CN509 5 6)
BATT SENS
IC508
NON-VOLATILE MEMORY
SS 4.9V (Q903)
V CC
EE CS
CS
EE SCK
SK
DATA TO EE
DI
DATA TO MODE
DO
X501 16MHz
16M OUT
16M IN
W501
CN509
MECHA CS
COSMO CS
DATA TO SLAVE
DATA TO MASTER
SCK
DATA TO SLYE
DATA TO MSTR
SCK
SYSTEM RESET
SYSTEM SYNC
BZ901 BUZER
CN505
3Vp-p
16 MHz
IC501 (35) REC/PB
W501
VFD DD ON
POWER (SS-136)
D512 TALLY
LOAD
UNLOAD
DEW SENS
THERMISTOR
TH501
MODE SW 0
MODE SW 1
MODE SW 2
S REEL FG
Q514
TAPE END DETECT
END SENS
CC DOWN
T/E LED
Q512
LED DRIVE
Q513
TAPE TOP DETECT
TOP SENS
T REEL FG
REEL LED
REC PROOF
MP HG
ME/MP
H18 DET
H CHG
NOR/H18
E/E
SP/LP
FE ON
D501(1/2)
Q515
CLOG
Q510
CLOG DETECT
INTEG-RATOR
Q508,509
RF DETECT
Q507
RF AMP
Q503
BUFFER
ATT
LPF
PB RF (SERVO)
PB RF
Q511
SP/LP DETECT
SP/LP DET
JOG
IC507
COMPARATOR
VA PB MODE
EDIT
SYNC DET
COMP SYNC
V1 SWP
RP PB MODE
Q516
RP PB MODE
SERVO
D501(1/2) SYSTEM RESET
4 Vp-p
2V
IC501 (4) REC/PB
HIFI/WIRD
MIC JACK MONO/ST
MONO/ST DET
MONO ST/DET
JOG VD
DS ON
MECHANISM CONTROL SERVO
RF SWP

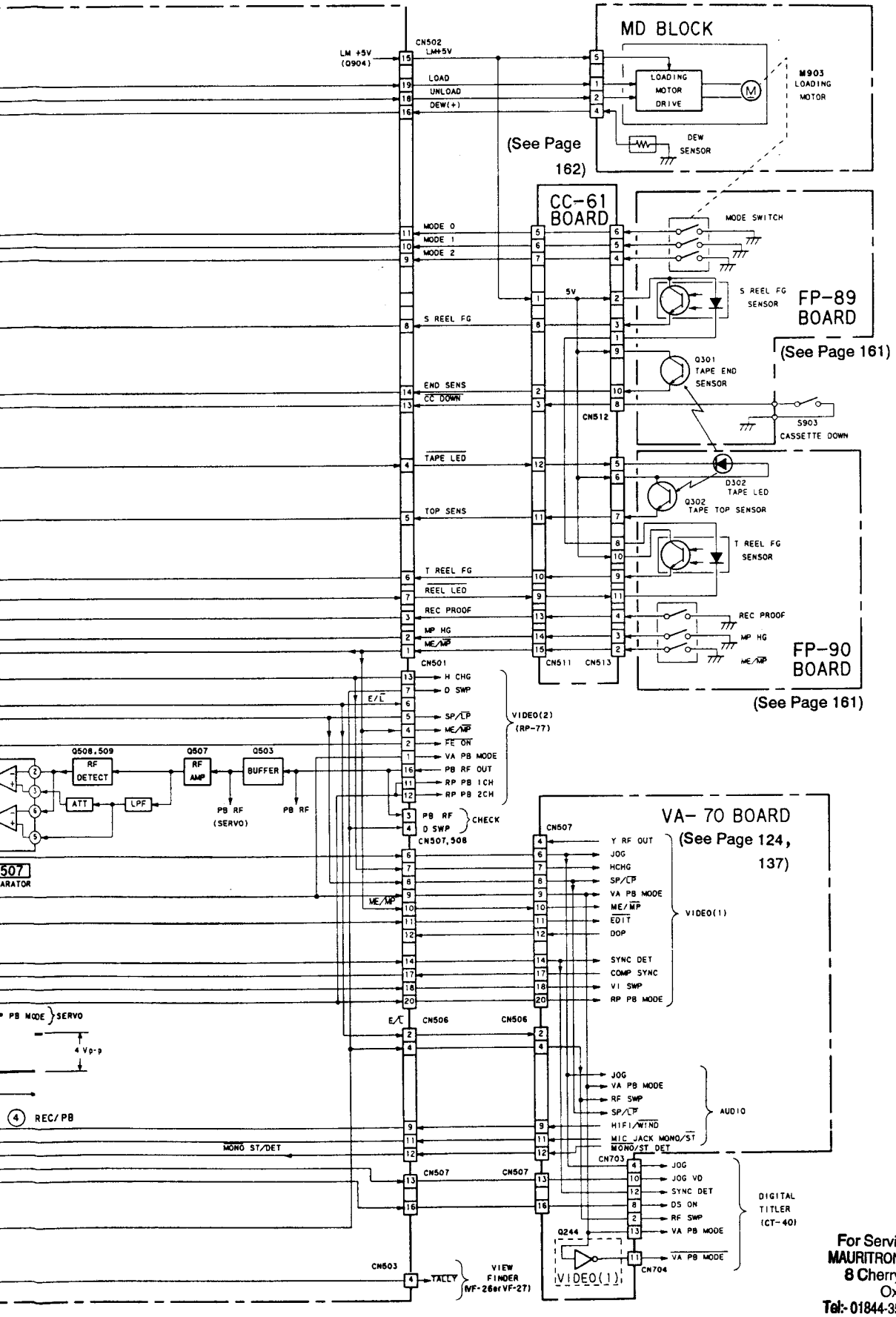

For Service Manuals Contact
MAURITRON TECHNICAL SERVICES
8 Cherry Tree Rd, Chinnor
Oxon OX9 4QY
Tel:- 01844-351694 Fax:- 01844-352554
Email:- enquiries@mauritron.co.uk

3-11. MODE CONTROL SYSTEM IC TERMINAL FUNCTION DESCRIPTION FU-104 BOARD IC501 (μPD75316)

Pin No.	Port Name	Function	I/O	Connection	Signal Name
1	S12	Segment signal output	O	LCD	S12
2	S13	Output (Four value output of 0, 1.7, 3.3, 5V) Segment terminal drive to LCD	O	LCD	S13
3	S14		O	LCD	S14
4	S15		O	LCD	S15
5	S16		O	LCD	S16
6	S17		O	LCD	S17
7	S18		O	LCD	S18
8	S19		O	LCD	S19
9	S20	Not used	O	LCD	
10	S21	Not used	O	LCD	
11	S22	Not used	O	LCD	
12	S23	Not used	O	LCD	
13	S24/BP0	Chip select signal to video IC (CXA1207) ⅂L 1V period "L" pulse	O	VA-70	$\overline{\text{VIDEO CS}}$
14	S25/BP1	Chip select signal to SS-136P board IC501 (CXP80116) ⅂L 1V period "L" pulse	O	SS-136P IC501	$\overline{\text{MECHA CS}}$
15	S26/BP2	Chip select signal to LCD driver (M34206) 1V period "L" pulse	O	CK-49, IC670	LED CONT
16	S27/BP3	Strobe signal for character generator (μPD6451) ⅃⌐L 1V "H" pulse train	O	VA-70	CG STB
17	S28/BP4	Chip select to titler (CF79028) ⅂L 1V "L" pulse	O	CT-40	$\overline{\text{TITEL CS}}$
18	S29/BP5	Chip select to SIRCS remote control (μPD7564) ⅂L 1V "L" pulse	O	DK-12P	$\overline{\text{REMO CS}}$ REMOTE CONTROL
19	S30/BP6	Chip select to SRAM "H" when using title. Normally, "L"	O	CT-40	S RAM CS
20	S31/BP7	Chip select to camera μCOM ⅃⌐L 1V period "H" pulse	O	CAMERA	CAM CS
21	COM0	LCD to common signal output Common terminal drive output	O	LCD	COM0
22	COM1		O	LCD	COM1
23	COM2		O	LCD	COM2
24	COM3		O	LCD	COM3
25	BIAS	Output terminal for outside dividing resistance cut Power input	O	FU-104	BIAS
26	VLC0	Power source for LCD drive, 3V in backup Power source 0 input terminal	I	FU-104	VLC0
27	VLC1	Power source for LCD drive, 3V in backup Power source 1 input terminal	I	FU-104	VLC1
28	VLC2	Power source for LCD drive, 3V in backup Power source 2 input terminal	I	FU-104	VLC2
29	P40	SS 5V, VTR 5V power source detection. "H" when VTR power source is turned on.	O	VA-70	VTR DD ON
30	P41	CAM 5V power source detection	O	CAMERA	$\overline{\text{CAM DD ON}}$

For Service Manuals Contact
MAURITRON TECHNICAL SERVICES
8 Cherry Tree Rd, Chinnor
Oxon OX9 4QY
Tel:- 01844-351694 Fax:- 01844-352554
Email:- enquiries@mauritron.co.uk

Pin No.	Port Name	Function	I/O	Connection	Signal Name
31	P42	Output port to reset each IC when power is turned on	O	all	SYS RESET
32	P43	External tally and internal tally drive port	O	VA-70, DK-12P	TALLY
33	Vss	GND			Vss
34	P50	L active KEY matrix output port	O	all	K OUT0
35	P51		O	all	K OUT1
36	P52		O	all	K OUT2
37	P53		O	all	K OUT3
38	P00/INT4	Clock select to 32 kHz with "L" and to 4.19 MHz with "H" When Battery is turned on, "L" is select	I	FU-104	BATT IN
39	P01/SCK	Serial clock input-output terminal Serial clock (2 μS) communication	O	all	SCK
40	P02/SO/SB0	Serial clock input-output terminal Serial clock (2 μS) communication	O	all	DATA TO SLV
41	P03/SI/SB1	Serial bus input terminal Serial clock (2 μS) communication	I	all	DATA TO MASTER
42	P10/INT0	(Edge detection vector interruption) System synchronization input port from CXD80116	I	SS-136P IC501	SYSTEM SYNC
43	P11/INT1	(Edge detection vector interruption) Lithium PRE END is selected with "L"	I	FU-104	LI PRE END
44	P12/INT2	STABY release input Release STANDBY with "L"	I	VA-70	LANC PWR ON
45	P13/TIO	E²PROM serial communication data input EE PROM communication KEY matrix OUT is combined	I	SS-136P IC508	DATA TO MODE
46	P20/PT00	E²PROM serial communication data input, EE PROM communication KEY matrix OUT is combined	O	SS-136P IC508	KOUT4/DATA TO EE
47	P21	E²PROM serial communication clock output key matrix output EE PROM communication KEY matrix OUT is combined.	O	SS-136P, VK-16P IC508	KOUT5/ SCK EE
48	P22/PCL	Chip select to E²PROM	O	SS-136P IC508	EE PROMCS
49	P23/BUZ	BUZZER output	O	SS-136P	BUZZER
50	P30/LCDCL	CAMERA/LINE select output Camera mode is selected with "H", VTR is selected with "L"	O	VA-70	CAM/LINE
51	P31/SYNC	Not used	O	VA-70	V MUTE
52	P32		O	VA-70	A MUTE
53	P33	Chip select to serial/parallel IC	O	VA-70	SP CS
54	VDD	VE 3V/5V power source terminal		FU-104	VDD
55	XT1	Sub system clock 32 kHz oscillation terminal	I	FU-104	XT1
56	XT2		I	FU-104	XT2
57	NC			–	NC
58	X1	Main system clock 4.19 MHz oscillation terminal	I	FU-104	X1
59	X2		I	FU-104	X2
60	P60/KK0	KEY matrix input terminal 18 msec period normally "H" Input-Output is possible by bit Pull-up from software is possible by 4-bit	I	all	K IN 0
61	P61/KR1		I	all	K IN 1
62	P62/KR2		I	all	K IN 2
63	P63/KR3		I	all	K IN 3

For Service Manuals Contact
MAURITRON TECHNICAL SERVICES
8 Cherry Tree Rd, Chinnor
Oxon OX9 4QY
Tel:- 01844 351694 Fax:- 01844 352554
Email:- enquiries@mauritron.co.uk

Pin No.	Port Name	Function	I/O	Connection	Signal Name
64	P70/KR4	KEY matrix input terminal 18 msec period normally "H" 4-bit input-Output port Pull-up from software is possible by 4-bit	I	all	K IN 4
65	P71/KR5		I	all	K IN 5
66	P72/KR6		I	all	K IN 6
67	P73/KR7		I	all	K IN 7
68	$\overline{\text{RESET}}$	System reset input Reset input terminal of microcomputer	I	all	$\overline{\text{RESET}}$
69	S0	Segment signal output terminal not used	O		
70	S1		O	LCD	
71	S2		O	LCD	
72	S3		O	LCD	
73	S4		O	LCD	
74	S5		O	LCD	
75	S6	LCD segment signal output terminal (Four value output of 0, 1.7, 3.3, 5V)	O	LCD	
76	S7		O	LCD	
77	S8		O	LCD	
78	S9		O	LCD	
79	S10		O	LCD	
80	S11		O	LCD	

For Service Manuals Contact
MAURITRON TECHNICAL SERVICES
8 Cherry Tree Rd, Chinnor
Oxon OX9 4QY
Tel:- 01844-351694 Fax:- 01844-352554
Email:- enquiries@mauritron.co.uk

3-12. SERVO, SYSTEM CONTROL SYSTEM TERMINAL FUNCTION SS-136P BOARD IC501 (CXP80116)

<table>
<tr><th>Pin No.</th><th>Signal Name</th><th>I/O</th><th>Function</th><th>Connection</th></tr>
<tr><td>1</td><td>SEL2</td><td>O</td><td rowspan="2">ATF REF PILOT signal frequency control
<table><tr><td>ATF REF PILOT</td><td>f1</td><td>f2</td><td>f3</td><td>f4</td></tr><tr><td>SEL 1</td><td>H</td><td>L</td><td>H</td><td>L</td></tr><tr><td>SEL 2</td><td>H</td><td>H</td><td>L</td><td>L</td></tr></table></td><td rowspan="2">ATF IC
CXA1204Q</td></tr>
<tr><td>2</td><td>SEL1</td><td>O</td></tr>
<tr><td>3</td><td>DS ON</td><td>O</td><td>Data Screen ON/OFF control
Data Screen ON and Data Screen key are selected with “H”</td><td>VIDEO block</td></tr>
<tr><td>4</td><td>VI SWP</td><td>O</td><td>RF SWP using for Video system
Normally, same as RF SWP
When using ’CH only “H” 3 Head is used</td><td>VIDEO block</td></tr>
<tr><td>5</td><td>DRM ACC</td><td>O</td><td>DRUM motor acceleration signal
Acceleration is selected with “H”</td><td>To Drum motor driver
CXA8006M</td></tr>
<tr><td>6</td><td>DRM BLK</td><td>O</td><td>DRUM motor brake signal
Brake is selected with “H”</td><td>To Drum motor driver
CXA8006M</td></tr>
<tr><td>7</td><td>JOG</td><td>O</td><td>Normal/JOG mode recognition signal
JOG is selected with “H”</td><td>R/P Amp
VIDEO block</td></tr>
<tr><td>8</td><td>FE RA</td><td>–</td><td rowspan="2">Not used</td><td rowspan="2">——</td></tr>
<tr><td>9</td><td>FE RS</td><td>–</td></tr>
<tr><td>10</td><td>H CHG</td><td>O</td><td>2CH or ’CH select signal
’CH is selected with “H”
Only 3 Head is used</td><td>VIDEO system
R/P Amp</td></tr>
<tr><td>11</td><td>SYSTEM SYNC</td><td>O</td><td>Internal bus communication synchronizing signal (V syncronization)</td><td>Mode controller</td></tr>
<tr><td>12</td><td>SP/$\overline{\text{LP}}$</td><td>O</td><td>SP/LP mode recognition signal
SP mode is selected with “H”</td><td>R/P Amp
VIDEO/AUDIO block</td></tr>
<tr><td>13</td><td>$\overline{\text{NOR}}$/Hi8</td><td>O</td><td>Not used. Normally, “L”</td><td>——</td></tr>
<tr><td>14</td><td>VA PB MODE</td><td>O</td><td>VIDEO/AUDIO system REC/PB mode select
PB mode is selected with “H”</td><td>VIDEO/AUDIO block</td></tr>
<tr><td>15</td><td>UNLOAD</td><td>O</td><td rowspan="2">Loading motor control signal
<table><tr><td></td><td>OFF</td><td>LOADING</td><td>UNLOADING</td><td>BRAKE</td></tr><tr><td>LOAD</td><td>L</td><td>H</td><td>L</td><td>H</td></tr><tr><td>UNLOAD</td><td>L</td><td>L</td><td>H</td><td>H</td></tr></table></td><td rowspan="2">To loading block</td></tr>
<tr><td>16</td><td>LOAD</td><td>O</td></tr>
<tr><td>17</td><td>CAP ON2</td><td>–</td><td rowspan="2">Not used</td><td rowspan="2">——</td></tr>
<tr><td>18</td><td>AF REC</td><td>–</td></tr>
<tr><td>19</td><td>ME/$\overline{\text{MP}}$</td><td>I</td><td>ME/MP tape recognition input
ME tape is selected with “H”</td><td>To CC-61 board</td></tr>
<tr><td>20</td><td>MP HG</td><td>I</td><td>MP HG tape recognition input
MPHG is selected with “L”</td><td>To CC-61 board</td></tr>
<tr><td>21</td><td>REC PROOF</td><td>I</td><td>REC PROOF recognition input
REC PROOF is selected with “L”</td><td>To CC-61 board</td></tr>
<tr><td>22</td><td>MODE SW2</td><td>I</td><td rowspan="3">Mechanical position input</td><td rowspan="3">To CC-61 board</td></tr>
<tr><td>23</td><td>MODE SW1</td><td>I</td></tr>
<tr><td>24</td><td>MODE SW0</td><td>I</td></tr>
<tr><td>25</td><td>$\overline{\text{CC DOWN}}$</td><td>I</td><td>Cassette IN switch input
Cassette IN is selected with “L”</td><td>To CC-61 board</td></tr>
<tr><td>26</td><td>DRM ON</td><td>O</td><td>Drum motor drive control
Motor Drive is selected with “H”</td><td>To Drum motor driver
CXA8006M</td></tr>
</table>

For Service Manuals Contact
MAURITRON TECHNICAL SERVICES
8 Cherry Tree Rd, Chinnor
Oxon OX9 4QY
Tel:- 01844-351694 Fax:- 01844-352554
Email:- enquiries@mauritron.co.uk

Pin No.	Signal Name	I/O	Function	Connection
27	T/E LED	O	LED for tape top end sensor drive control LED Flashing is selected with "H"	To CC-61 board
28	$\overline{\text{REEL LED}}$	O	LED for reel sensor drive control LED Flashing is selected with "L"	To CC-61 board
29		–	Not used	——
30	$\overline{\text{EDIT}}$	O	EDIT ON/OFF control EDIT is selected with "L" and interlocked with EDIT key	To VIDEO block
31	SS GND	–	——	——
32	$\overline{\text{SYSTEM RESET}}$	I	Control by mode controller with RESET teriminal of this microcomputer RESET is selected "L"	Mode controller and others
33	SS GND	–	——	——
34	16M OUT	O	Crystal connecting terminal for system clock oscillation (16 MHz)	X'tal (X501)
35	16M IN	I		
36	$\overline{\text{COSMO CS}}$	I	Select signal of this microcomputer from internal bus communication mode controller Selected with "L"	Mode controller
37	DATA TO SLVE	I	Serial data input terminal	Mode controller
38	DATA TO MSTR	O	Serial data output terminal	Mode controller
39	$\overline{\text{SCK}}$	I	Serial clock input terminal	Mode controller
40	PCM ACT	–	Not used	——
41	Hi8 DET	–	Not used. Normally, "L"	——
42	S IN	–	Not used. Normally, "H"	——
43	$\overline{\text{MONO}}$/ST DET	I	AFM monaural/stereo recognition input Stereo is selected "H" (Only stereo correspondence model)	To AUDIO block
44	TOP SENS	I	Tape top end sensor input TOP is selected with "H" END is selected with "H"	To CC-61 board
45	END SENS	I		
46	T REEL FG	I	Reel sensor input Take up side	To CC-61 board
47	S REEL FG	I	Reel sensor input Supply side	To CC-61 board
48	BATT SENS	I	Battery input voltage sense	——
49	DEW SENS	I	DEW SENSOR input	DEW SENSOR
50	THERMISTOR	I	THERMISTOR input (This model: fixed valur)	
51	ATF ERROR	I	ATF error (ATF LOCK error) input A/D input teriminal	SS-136P IC506 ⑫
52	SS GND	–	——	——
53	SS 4.9V		Power source supply terminal	
54	SS 4.9V			
55	DRM PG	I	DRUM PG input FRC (high precision timer) capture input terminal	SS-136P IC502 ⑨
56	$\overline{\text{HiFi}}$/WIND	I	MIC HiFi/WIND input. HiFi is selected with "L", WIND is selected with "H"	To AUDIO block
57	CLOG	I	Clog detection signal input. CLOG is selected with "H"	SS-136P Q510 ©
58	COMP SYNC	I	Composite SYNC (composite syncronizing signal) input. (built-in V SYNC separator)	To VIDEO block
59	SP/$\overline{\text{LP}}$ DET	I	SP/LP recognition signal input	SS-136P Q511 ©

For Service Manuals Contact
MAURITRON TECHNICAL SERVICES
8 Cherry Tree Rd, Chinnor
Oxon OX9 4QY
Tel:- 01844-351694 Fax:- 01844-352554
Email:- enquiries@mauritron.co.uk

n	Connection
ol	To CC-61 board
	To CC-61 board
	——
cked with EDIT key	To VIDEO block
	——
teriminal of this microcomputer	Mode controller and others
	——
lock oscillation (16 MHz)	X'tal (X501)
internal bus communication	Mode controller
	Mode controller
	Mode controller
	Mode controller
	——
	——
	——
respondence model)	To AUDIO block
	To CC-61 board
	To CC-61 board
	To CC-61 board
	——
	DEW SENSOR
valur)	
	SS-136P IC506 ⑫
	——
terminal	SS-136P IC502 ⑨
cted with "H"	To AUDIO block
	SS-136P Q510 ©
g signal) input. (built-in V	To VIDEO block
	SS-136P Q511 ©

Pin No.	Signal Name	I/O	Function
60	DRM PG	–	——
61	DRM FG	I	DRUM FG input terminal FRC capture input terminal
62	CAP FG	I	CAPSTAN FG input terminal FRC capture input terminal
63	MONO/$\overline{ST}$	–	Not used
64	SYNC DET	I	With/Without VIDEO signal recognition signal
65	CAP D/A	O	DA gate pulse output terminal for CAP ERROR Servo exclusive output terminal (DA mode)
66	DRM D/A	O	DA gate pulse output terminal for DRUM ERR Servo exclusive output terminal (DA mode)
67	CAPPWM	O	PWM output terminal for CAP ERROR output Servo exclusive output terminal (PWM mode)
68	DRM RVS	O	DRUM rotating direction control signal RVS is selected with "H" FWD is selected with "L"
69	CAP FG	I	External event input terminal to CAP FG input counter for TAPE COUNTER drive
70	MIC JACK MONO/$\overline{ST}$	I	External MIC Monaural/stereo recording signal Monaural is selected with "H".
71	SS 4.9V		
72	SS 4.9V		
73	SS GND	–	——
74	–	–	Not used
75	CAP ON	O	Capstan driver ON control signal
76	CAP FWD/$\overline{REV}$	O	Capstan rotating direction control signal, FWD is selected with "H", RVS is selected w
77	$\overline{RP\ PB\ MODE}$	O	REC/PB mode select signal of RP amplifier and
78	FE ON	O	Flying erase oscillatio ON/OFF signal Oscillation is selected with "H"
79	JOG VD	O	Artifical VD output terminal input to VIDEO sig playback
80	RF SWP	O	RF SWP output terminal

Function	Connection
–	——
UM FG input terminal C capture input terminal	SS-136P IC502 ⑩ Sense Amplifier
PSTAN FG input terminal C capture input terminal	SS-136P IC502 ⑫ Sense Amplifier
used	——
n/Without VIDEO signal recognition signal input	To VIDEO block
gate pulse output terminal for CAP ERROR output o exclusive output terminal (DA mode)	To capstan lowpass filter
gate pulse output terminal for DRUM ERROR output o exclusive output terminal (DA mode)	To drum lowpass filter
M output terminal for CAP ERROR output o exclusive output terminal (PWM mode)	Capstan driver SS-136P IC503
M rotating direction control signal S is selected with "H" D is selected with "L"	SS-136P IC503 ③
nal event input terminal to CAP FG input terminal exclusive er for TAPE COUNTER drive	SS-136P IC502 ⑫ Sense Amplifier
nal MIC Monaural/stereo recording signal naural is selected with "H".	To AUDIO block
	——
sed	——
an driver ON control signal	SS-136P IC504 ⑬ Capstan driver
an rotating direction control signal, D is selected with "H", RVS is selected with "L"	SS-136P IC504 ⑳ Capstan driver
PB mode select signal of RP amplifier and ATF IC	SS-136P Q516 Ⓑ
erase oscillatio ON/OFF signal tion is selected with "H"	To RP-77 Amp
al VD output terminal input to VIDEO signal in varying speed ck	To VIDEO block
P output terminal	RP block VIDEO/AUDIO block

3-13. AUDIO BLOCK DIAGRAM

(See Page 153)

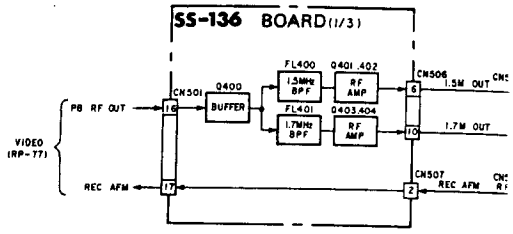

For Service Manuals Contact
MAURITRON TECHNICAL SERVICES
8 Cherry Tree Rd, Chinnor
Oxon OX9 4QY
Tel:- 01844-351694 Fax:- 01844-352554
Email:- enquiries@mauritron.co.uk

3-13. AUDIO BLOCK DIAGRAM

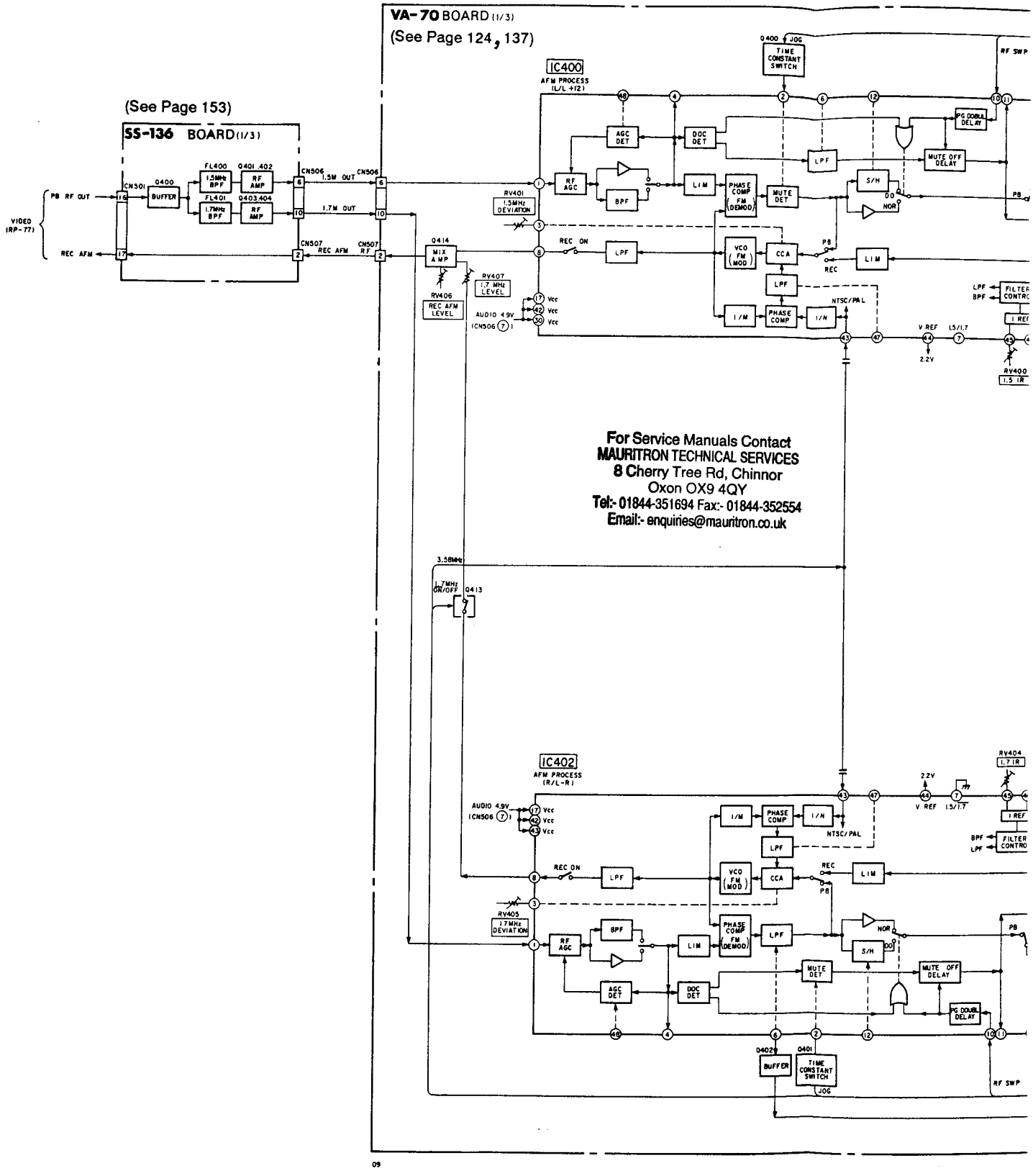

For Service Manuals Contact
MAURITRON TECHNICAL SERVICES
8 Cherry Tree Rd, Chinnor
Oxon OX9 4QY
Tel:- 01844-351694 Fax:- 01844-352554
Email:- enquiries@mauritron.co.uk

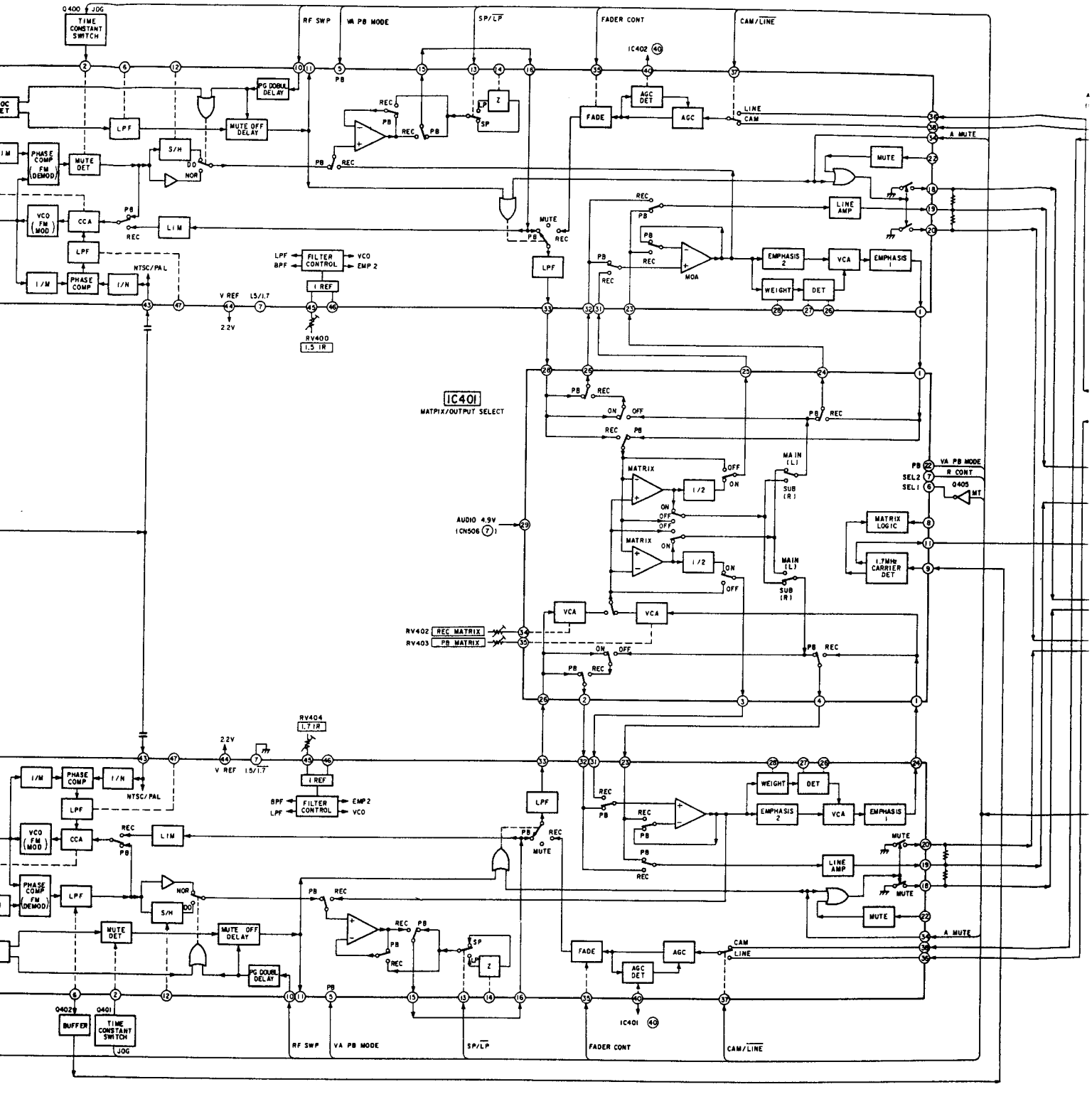
Q400 JOG
TIME CONSTANT SWITCH
RF SWP
VA PB MODE
SP/LP
FADER CONT
CAM/LINE
IC402 40
PG DOUBL DELAY
MUTE OFF DELAY
LPF
S/H
MUTE DET
PHASE COMP (FM DEMOD)
VCO (FM MOD)
CCA
LIM
I/M
I/N
PHASE COMP
NTSC/PAL
V REF
L5/L7
2.2V
I REF
RV400 1.5 1R
FILTER CONTROL
LPF
BPF
VCO
EMP 2
FADE
AGC
AGC DET
LINE CAM
A MUTE
MUTE
LINE AMP
MOA
EMPHASIS 2
VCA
EMPHASIS 1
WEIGHT
DET
IC401
MATPIX/OUTPUT SELECT
MATRIX
1/2
MAIN (L)
SUB (R)
VA PB MODE
R CONT
Q405
MT
AUDIO 4.9V (CN506 7)
MATRIX LOGIC
1.7MHz CARRIER DET
RV402 REC MATRIX
RV403 PB MATRIX
RV404 1.7 1R
Q402
BUFFER
Q401
TIME CONSTANT SWITCH
JOG
RF SWP
VA PB MODE
SP/LP
FADER CONT
CAM/LINE
IC401 40

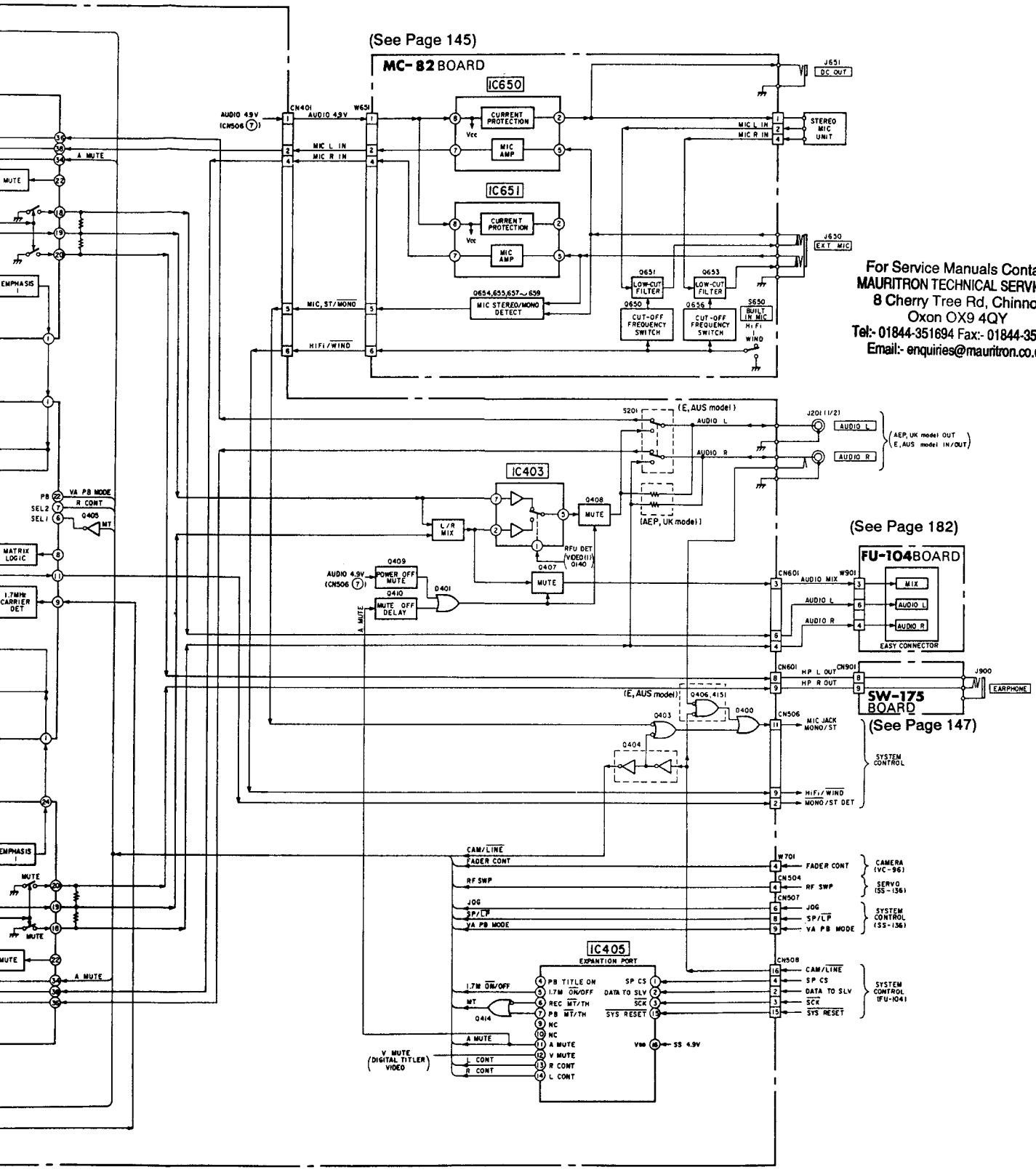

For Service Manuals Contact
MAURITRON TECHNICAL SERVICES
8 Cherry Tree Rd, Chinnor
Oxon OX9 4QY
Tel:- 01844-351694 Fax:- 01844-352554
Email:- enquiries@mauritron.co.uk

3-14. ELECTRICAL VIEWFINDER BLOCK DIAGRAM

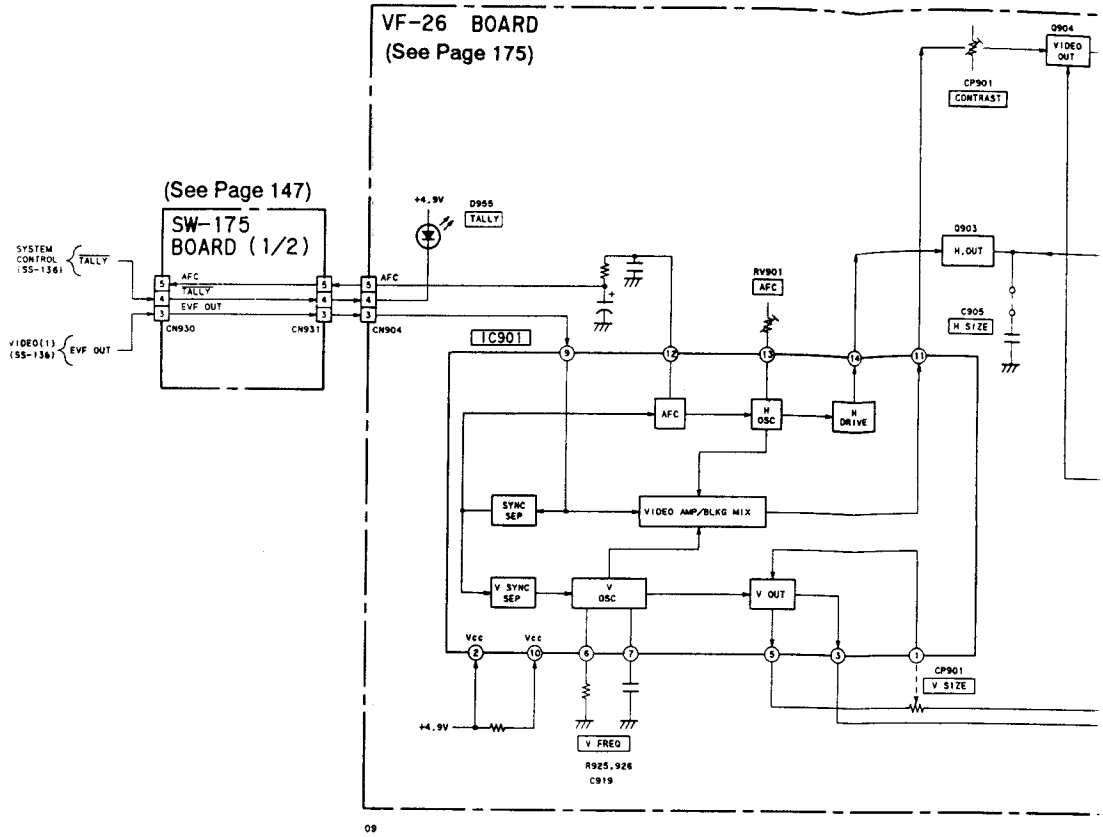

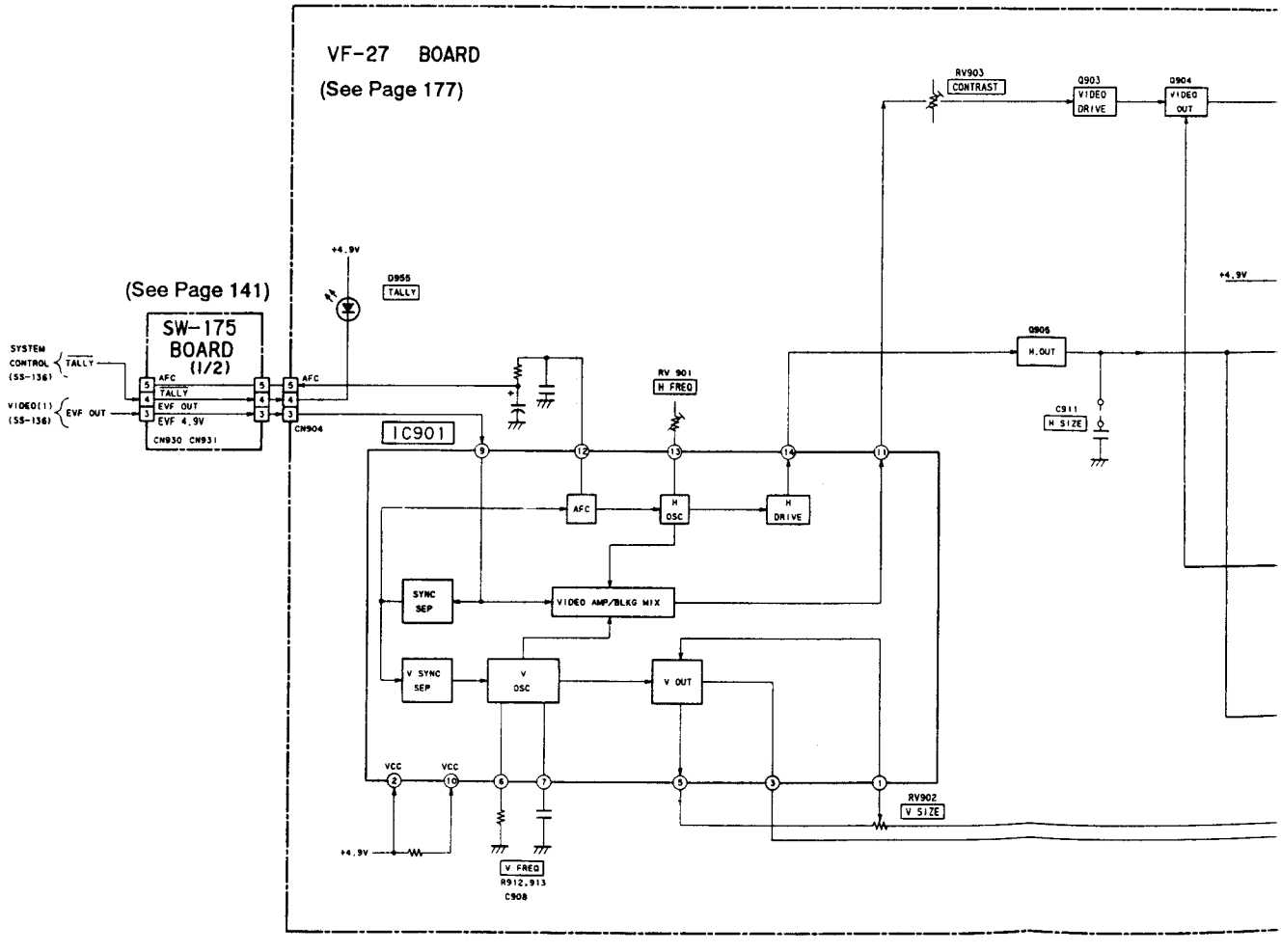

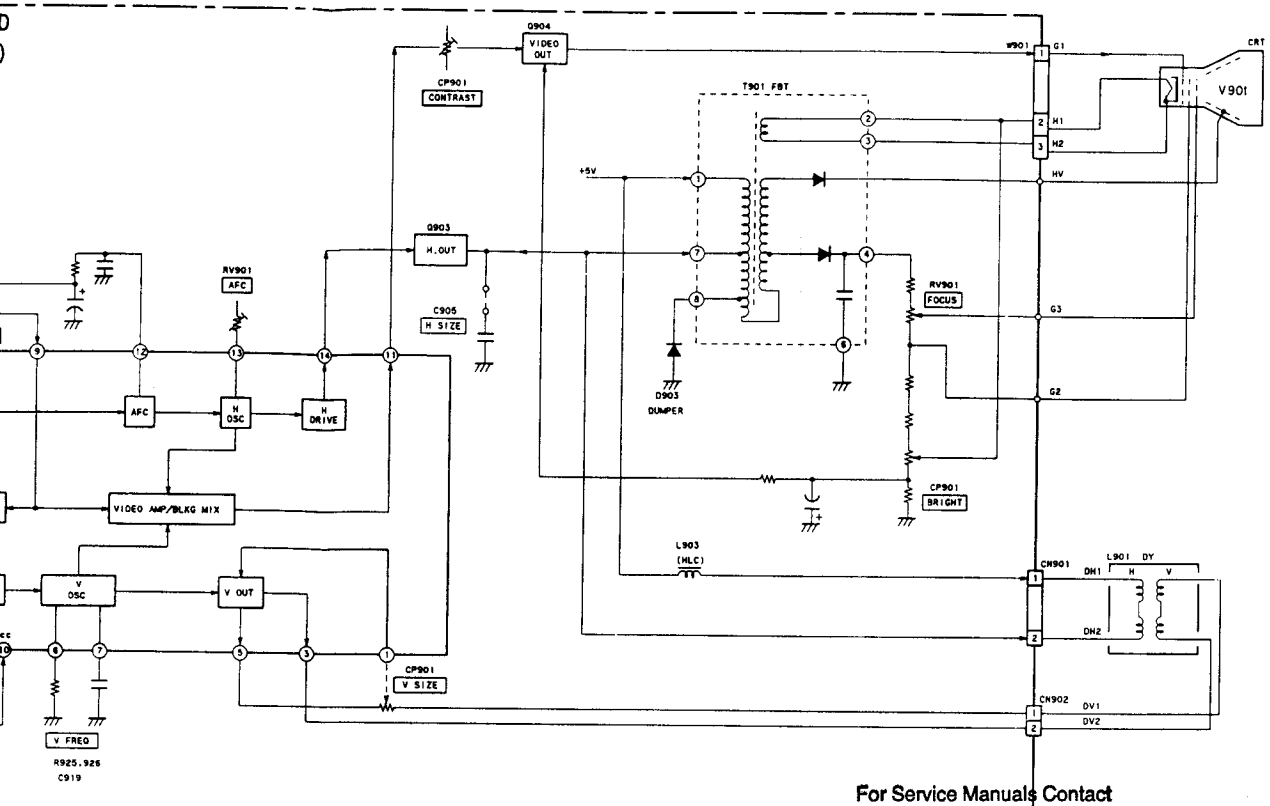

For Service Manuals Contact
MAURITRON TECHNICAL SERVICES
8 Cherry Tree Rd, Chinnor
Oxon OX9 4QY
Tel:- 01844-351694 Fax:- 01844-352554
Email:- enquiries@mauritron.co.uk

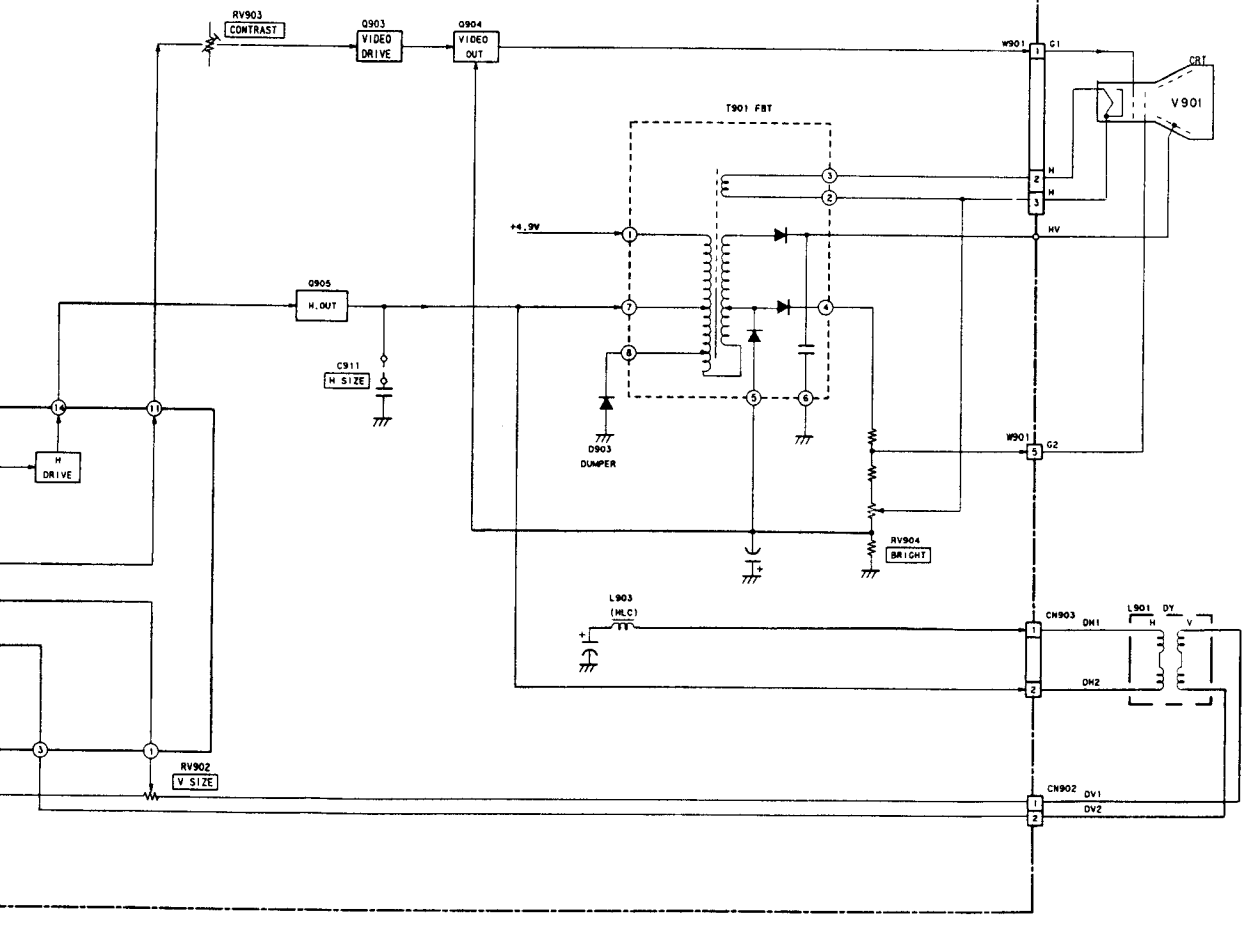

3-15. POWER BLOCK DIAGRAM

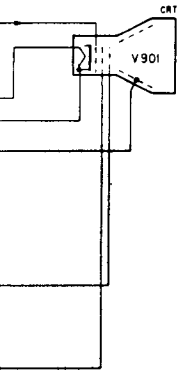

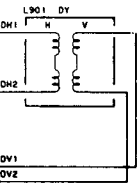

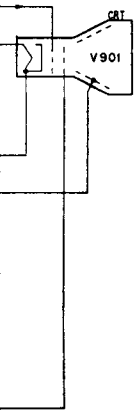

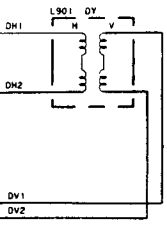

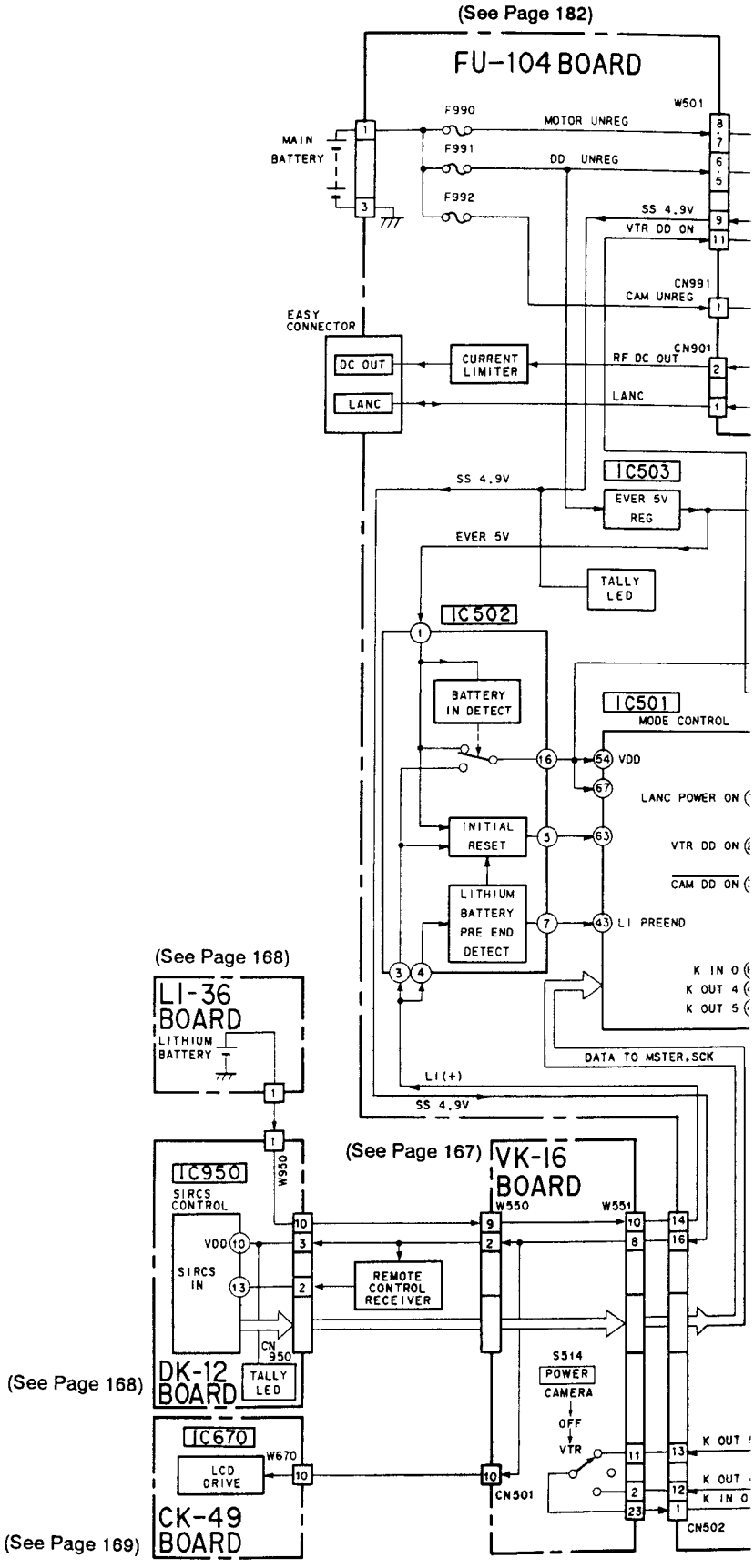

09

For Service Manuals Contact
MAURITRON TECHNICAL SERVICES
8 Cherry Tree Rd, Chinnor
Oxon OX9 4QY
Tel:- 01844-351694 Fax:- 01844-352554
Email:- enquiries@mauritron.co.uk

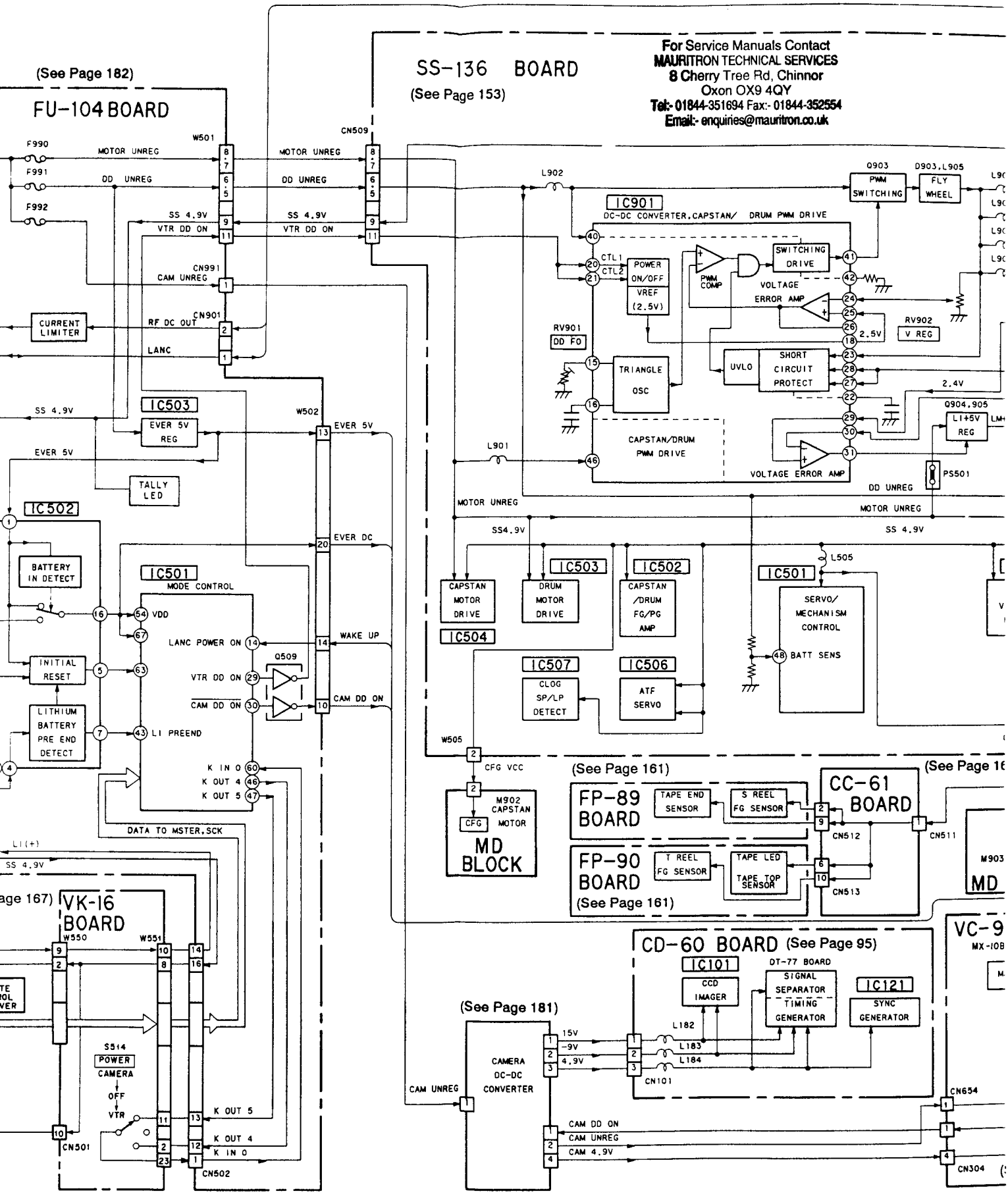

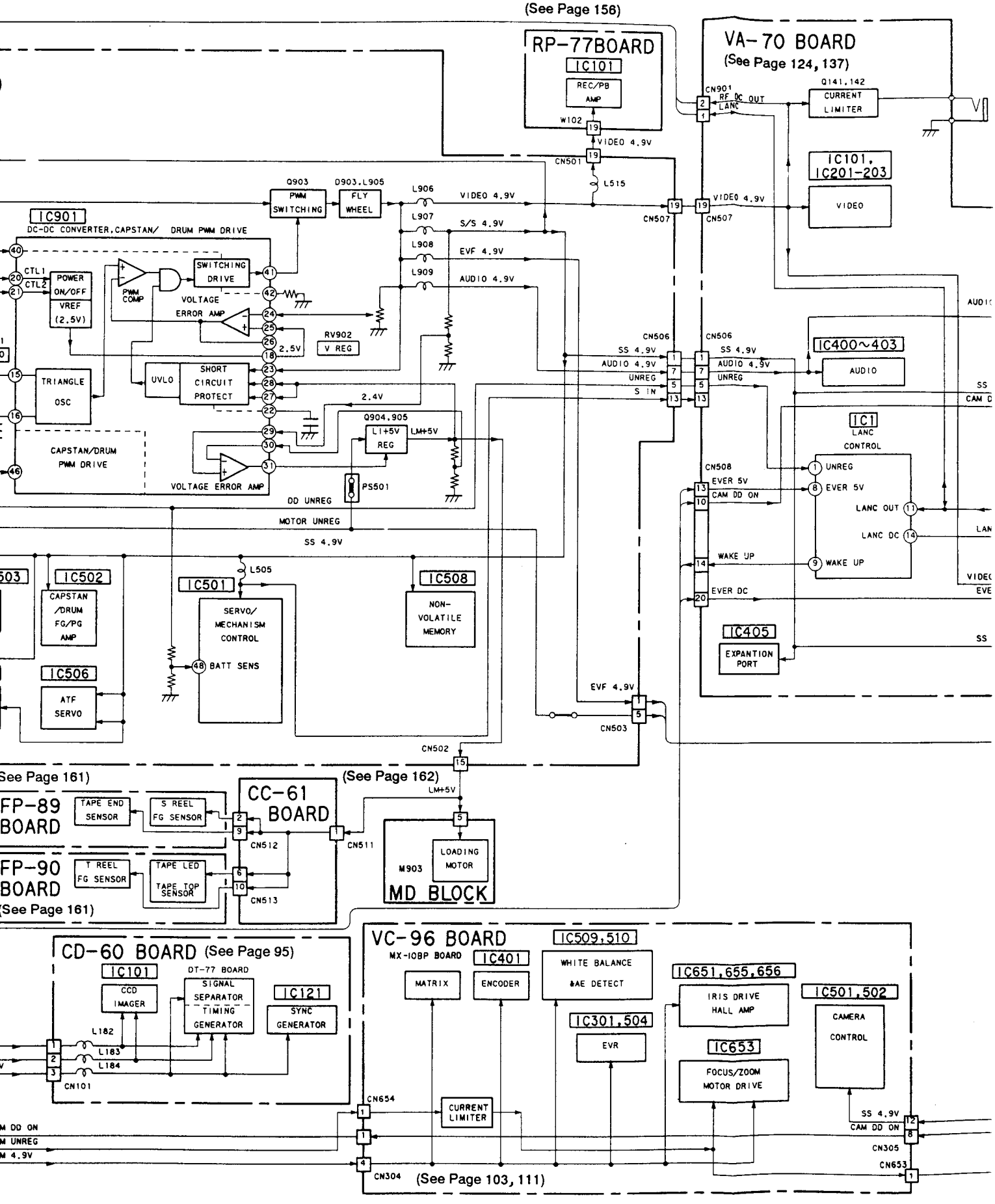
(See Page 156)
RP-77BOARD
IC101
REC/PB AMP
W102
VIDEO 4.9V
CN501
L515
VA-70 BOARD
(See Page 124, 137)
CN901
RF DC OUT
LANC
Q141,142
CURRENT LIMITER
IC101, IC201-203
VIDEO
CN507
IC901
DC-DC CONVERTER,CAPSTAN/ DRUM PWM DRIVE
Q903
PWM SWITCHING
D903,L905
FLY WHEEL
L906
L907
L908
L909
S/S 4.9V
EVF 4.9V
AUDIO 4.9V
SWITCHING DRIVE
POWER ON/OFF
VREF (2.5V)
CTL1
CTL2
PWM COMP
VOLTAGE ERROR AMP
2.5V
RV902
V REG
UVLO
SHORT CIRCUIT PROTECT
TRIANGLE OSC
2.4V
Q904,905
L1+5V REG
LM+5V
CAPSTAN/DRUM PWM DRIVE
VOLTAGE ERROR AMP
PS501
DD UNREG
MOTOR UNREG
SS 4.9V
CN506
SS 4.9V
AUDIO 4.9V
UNREG
S IN
IC400~403
AUDIO
IC1
LANC CONTROL
CN508
EVER 5V
CAM DD ON
UNREG
LANC OUT
LANC DC
WAKE UP
EVER DC
IC405
EXPANTION PORT
IC502
CAPSTAN /DRUM FG/PG AMP
IC506
ATF SERVO
IC501
SERVO/ MECHANISM CONTROL
BATT SENS
L505
IC508
NON-VOLATILE MEMORY
CN502
CN503
(See Page 161)
(See Page 162)
FP-89 BOARD
TAPE END SENSOR
S REEL FG SENSOR
CC-61 BOARD
CN512
CN511
LM+5V
FP-90 BOARD
T REEL FG SENSOR
TAPE LED
TAPE TOP SENSOR
CN513
M903
LOADING MOTOR
MD BLOCK
(See Page 161)
CD-60 BOARD (See Page 95)
IC101
DT-77 BOARD
CCD IMAGER
SIGNAL SEPARATOR TIMING GENERATOR
IC121
SYNC GENERATOR
L182
L183
L184
CN101
VC-96 BOARD
MX-108P BOARD
IC401
MATRIX
ENCODER
IC509,510
WHITE BALANCE &AE DETECT
IC301,504
EVR
IC651,655,656
IRIS DRIVE HALL AMP
IC653
FOCUS/ZOOM MOTOR DRIVE
IC501,502
CAMERA CONTROL
CN654
CURRENT LIMITER
CN304
(See Page 103, 111)
CN305
CN653
M DD ON
M UNREG
M 4.9V

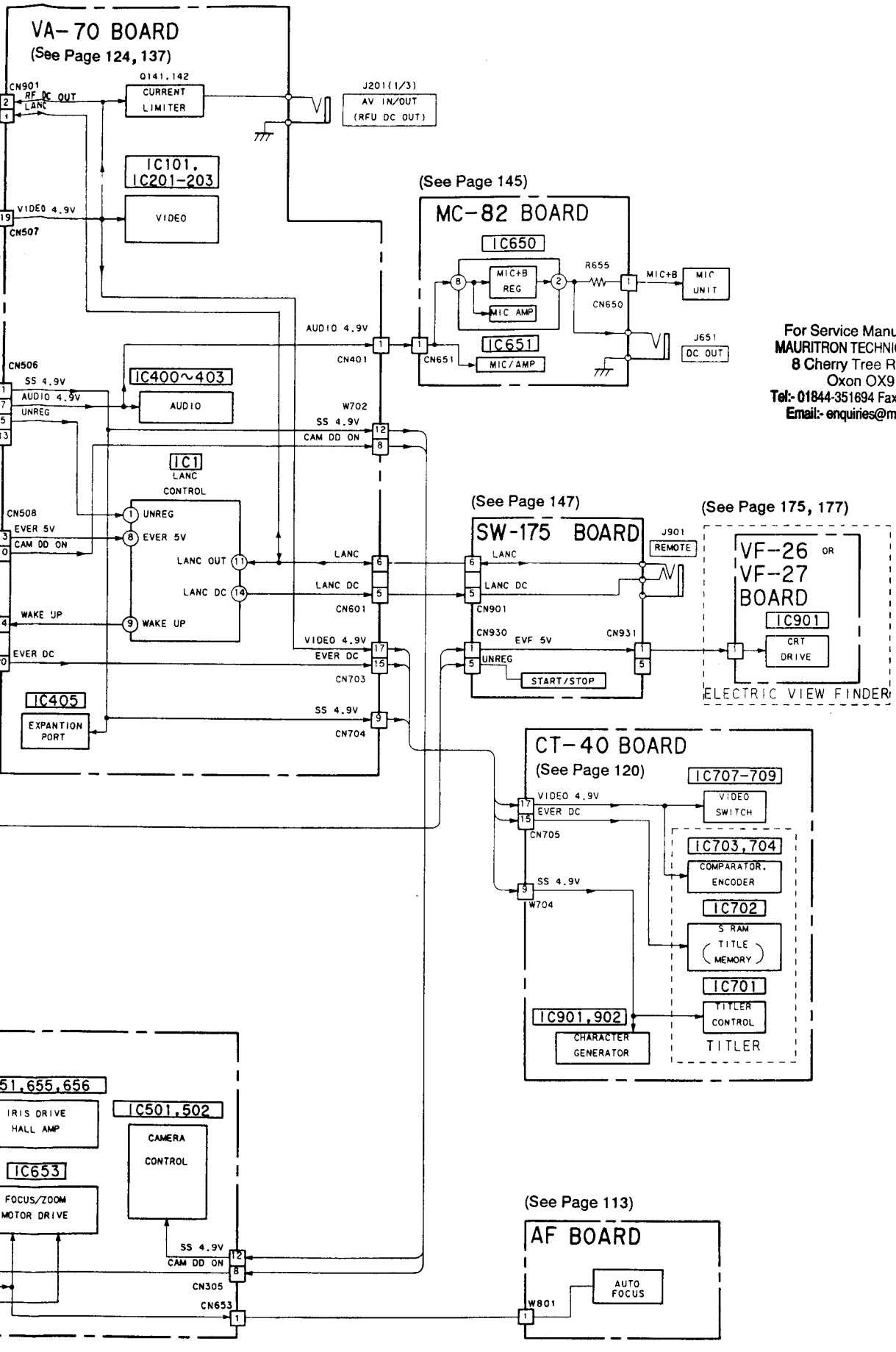

For Service Manuals Contact
MAURITRON TECHNICAL SERVICES
8 Cherry Tree Rd, Chinnor
Oxon OX9 4QY
Tel:- 01844-351694 Fax:- 01844-352554
Email:- enquiries@mauritron.co.uk

SECTION 4
PRINTED WIRING BOARDS AND SCHEMATIC DIAGRAMS

4-1. FRAME SCHEMATIC DIAGRAM

For Service Manuals Contact
MAURITRON TECHNICAL SERVICES
8 Cherry Tree Rd, Chinnor
Oxon OX9 4QY
Tel:- 01844-351694 Fax:- 01844-352554
Email:- enquiries@mauritron.co.uk

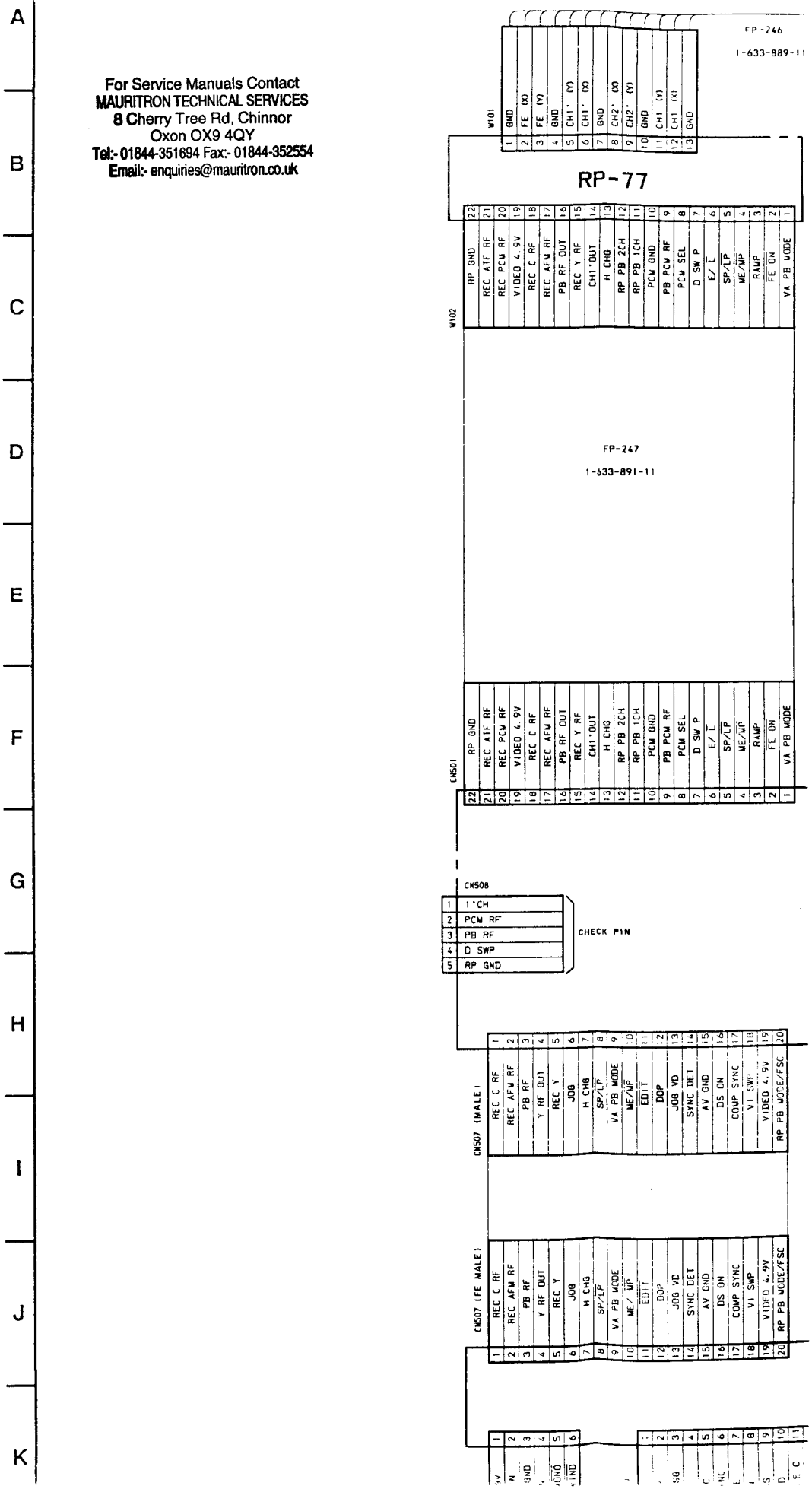

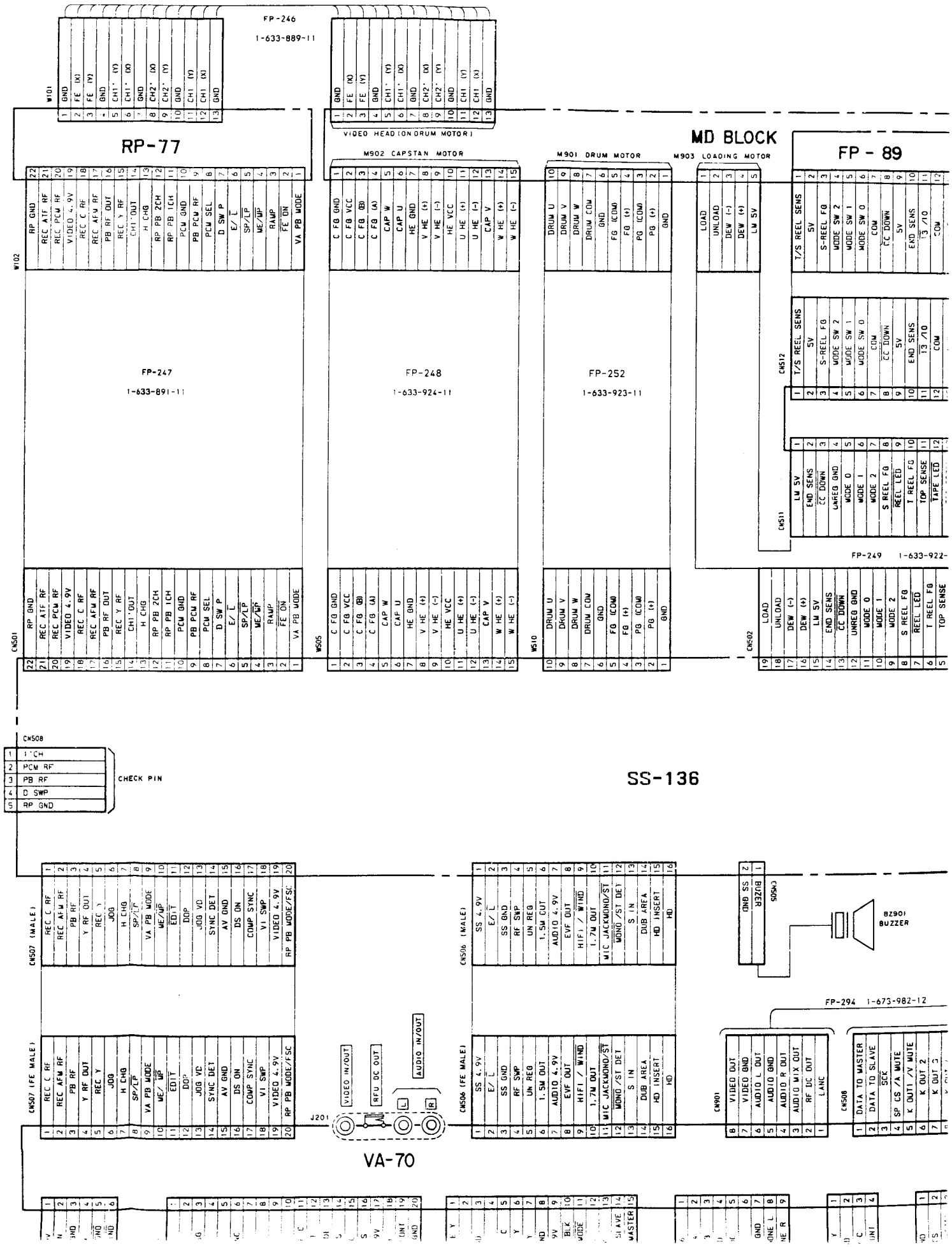
RP-77
FP-246
1-633-889-11
W101
VIDEO HEAD (ON DRUM MOTOR)
M902 CAPSTAN MOTOR
M901 DRUM MOTOR
M903 LOADING MOTOR
MD BLOCK
FP - 89
W102
FP-247
1-633-891-11
FP-248
1-633-924-11
FP-252
1-633-923-11
CN512
CN511
FP-249 1-633-922-
CN501
W505
W510
CN502
CN508
CHECK PIN
SS-136
CN507 (MALE)
CN506 (MALE)
CN503
BZ901
BUZZER
FP-294 1-673-982-12
CN507 (FE MALE)
CN506 (FE MALE)
CN901
CN508
VIDEO IN/OUT
RFU DC OUT
AUDIO IN/OUT
J201
VA-70

For Service Manuals Contact
MAURITRON TECHNICAL SERVICES
8 Cherry Tree Rd, Chinnor
Oxon OX9 4QY
Tel:- 01844-351694 Fax:- 01844-352554
Email:- enquiries@mauritron.co.uk

9 | 10 | 11 | 12 | 13 | 14 | 15 | 16

CAM DC/DC CONVERTER

1-945-470-12

FD-26

CAM UNREG 1
CAM GND 2

NO USE

CN992 BATTERY CHASSIS GND

W991 CAM UNREG CAM GND

MD BLOCK

M903 LOADING MOTOR

FP - 89

FP - 90

CN512

CN513

CC-61

J901(EASY CONNECTER)

Y COMP DOOUT MIX A.G

V.G C LANC L R

FU-104

CN504

1	S5	S6
2	S7	S7
3	S9	S9
4	S8	S8
5	S11	S11
6	S10	S10
7	S13	S13
8	S12	S12
9	S15	S15
10	S14	S14
11	S17	S17
12	S16	S16
13	S19	S19
14	S18	S18
15	COM 3	COM 3
16	COM 2	COM 2
17	COM 1	COM 1
18	COM 0	COM 0
19	K IN 4	K IN 4
20	K OUT 4	K OUT 4
21	K OUT 3	K OUT 3

CN511

FP-249 1-633-922-11

CN502

CN509

1	M UNREG GND	M UNREG GND 1
2	M UNREG GND	M UNREG GND 2
3	DD UNREG GND	DD UNREG GND 3
4	DD UNREG GND	DD UNREG GND 4
5	DD UNREG	DD UNREG 5
6	DD UNREG	DD UNREG 6
7	M UNREG	M UNREG 7
8	M UNREG	M UNREG 8
9	SS 4.9V	SS 4.9V 9
10	SS GND	SS GND 10
11	VTR DD ON	VTR DD ON 11
12	TALLY	TALLY 12
13	SYS RESET	SYS RESET 13
14	MECHA CS	MECHA CS 14
15	DATA TO MASTER	DATA TO MASTER 15
16	DATA TO SLAVE	DATA TO SLAVE 16
17	SCK	SCK 17
18	MK CS	MK CS 18
19	SYSTEM SYNC	SYSTEM SYNC 19
20	EE CS	EE CS 20
21	EE SCK	EE SCK 21
22	DATA TO EE	DATA TO EE 22
23	DATA TO MODE	DATA TO MODE 23

FP-295 1-633-978-11

CN502

W551

23	K IN 0	K IN 0 23
22	K IN 1	K IN 1 22
21	K IN 2	K IN 2 21
20	K IN 3	K IN 3 20
19	K IN 4	K IN 4 19
18	K IN 5	K IN 5 18
17	K IN 6	K IN 6 17
16	K OUT 0	K OUT 0 16
15	K OUT 1	K OUT 1 15
14	K OUT 2	K OUT 2 14
13	K OUT 3	K OUT 3 13
12	K OUT 4	K OUT 4 12
11	K OUT 5	K OUT 5 11
10	LI (+)	LI (+) 10
9	TALLY	TALLY 9
8	SS 4.9V	SS 4.9V 8
7	DATA TO MASTER	DATA TO MASTER 7
6	SCK	SCK 6
5	REMO CS	REMO CS 5
4	SYS RESET	SYS RESET 4
3	SS GND	SS GND 3
2	LCD CS/LED CONT	LCD CS /LED CONT 2
1	DATA TO SLVE	DATA TO SLVE 1

FP-292 1-633-981-01

S-136

CN503

1	EVF 4.9V
2	SS GND
3	EVF OUT
4	TALLY
5	UNREG
6	UNREG GND

CN505

BZ901 BUZZER

W502

DATA TO MASTER	1
DATA TO SLAVE	2
SCK	3
SP CS/A MUTE	4
K OUT1 /V MUTE	5
K OUT 2	6
K OUT 3	7
K OUT 4	8
K IN 6	9
CAM DD ON	10
CAM CS	11
VIDEO CS	12
EVER SV	13
WAKE UP	14
SYS RESET	15
CAM / LINE	16
CG STB	17
SRAM CS	18
TITLE CS	19
EVER DC	20

W901

8	VIDEO OUT
7	VIDEO GND
6	AUDIO L OUT
5	AUDIO GND
4	AUDIO R OUT
3	AUDIO MIX OUT
2	RF DC OUT
1	LANC

1-633-977-12
FP-293

FP-294 1-673-982-12

CN901

CN508

FP-413

IC960

0-2

REMOTE CONTROL RECIEVER (FLEXIBLE MOUNT)

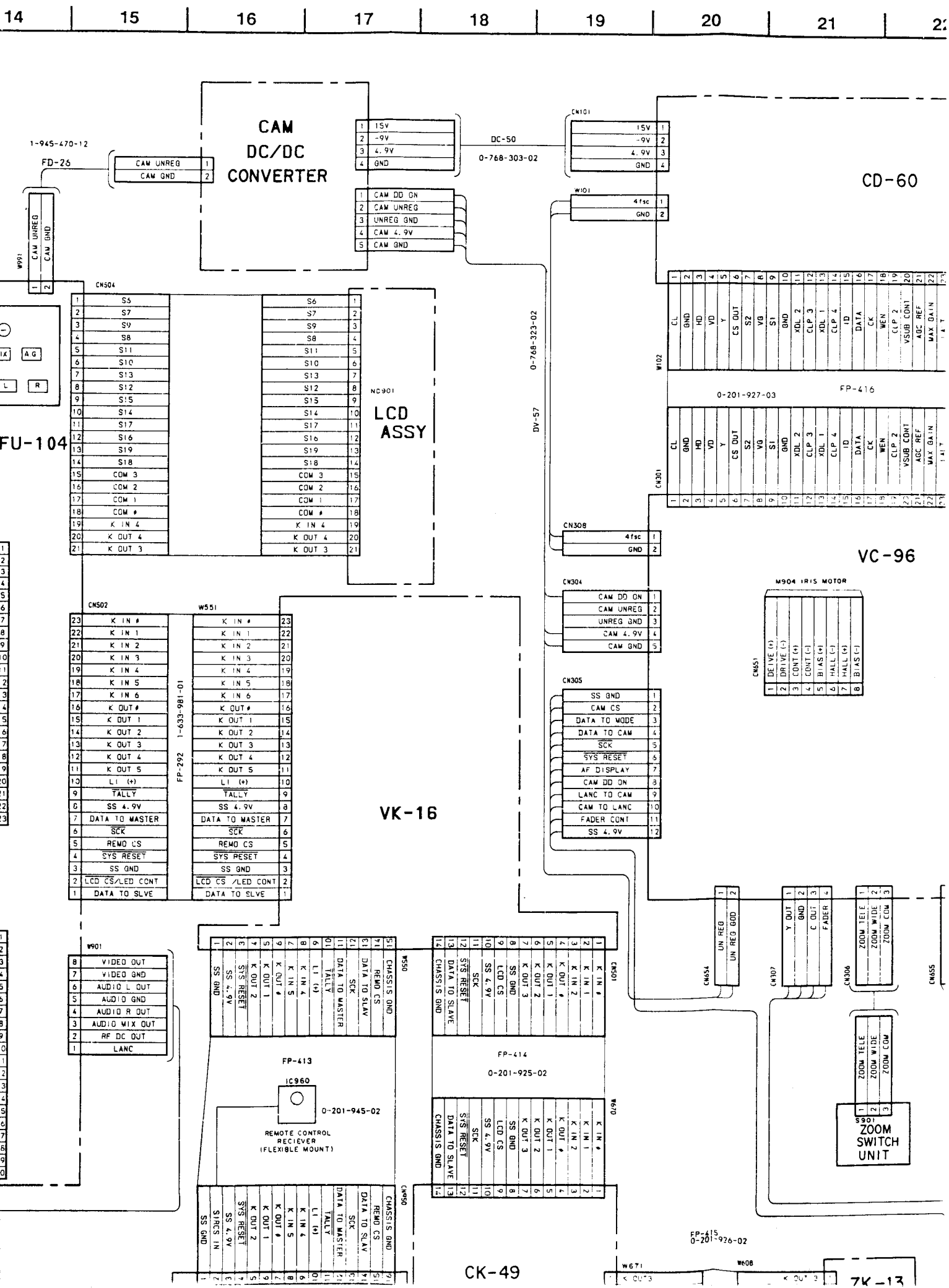

14
15
16
17
18
19
20
21
CAM DC/DC CONVERTER
1-945-470-12
FD-26
CAM UNREG
CAM GND
W991
DC-50
0-768-303-02
CN101
CD-60
W101
4fsc
GND
CAM DD ON
CAM UNREG
UNREG GND
CAM 4.9V
CAM GND
CN504
FU-104
NC901
LCD ASSY
0-768-323-02
DV-57
W102
FP-416
0-201-927-03
CN301
CN308
VC-96
M904 IRIS MOTOR
CN304
CN305
CN651
CN502
W551
FP-292 1-633-981-01
VK-16
W901
VIDEO OUT
VIDEO GND
AUDIO L OUT
AUDIO GND
AUDIO R OUT
AUDIO MIX OUT
RF DC OUT
LANC
W950
CN501
FP-413
IC960
0-201-945-02
REMOTE CONTROL RECIEVER (FLEXIBLE MOUNT)
FP-414
0-201-925-02
W670
CN654
CN307
CN306
CN655
S901
ZOOM SWITCH UNIT
CN950
CK-49
FP-415
0-201-926-02
W671
W608
ZK-13

20 | 21 | 22 | 23 | 24 | 25 | 26 | 27

CD-60

DT-77F

1	2	3	4	5	6	7	8	9	10	11	12	13	14	15	16	17	18	19	20	21	22	23	24	25	26	27	28	29	30	31	32	33	34
CL	GND	HD	VD	Y	CS OUT	S2	VG	S1	GND	XDL 2	CLP 3	XDL 1	CLP 4	ID	DATA	CK	WEN	CLP 2	VSUB CONT	AGC REF	MAX GAIN	LALT	STB	BFG	AGC CONT F	BF	AGC CONT R	BLK	IRIS CONT	SYNC	PG CONT	V SUB	CCD DET SW

0-201-927-03

FP-416

1	2	3	4	5	6	7	8	9	10	11	12	13	14	15	16	17	18	19	20	21	22	23	24	CN302	1	2	3	4	5	6	7	8	9	10
CL	GND	HD	VD	Y	CS OUT	S2	VG	S1	GND	XDL 2	CLP 3	XDL 1	CLP 4	ID	DATA	CK	WEN	CLP 2	VSUB CONT	AGC REF	MAX GAIN	LALT	STB		BFG	AGC CONT F	BF	AGC CONT R	BLK	IRIS CONT	SYNC	PG CONT	V SUB	CCD DET SW

For Service Manuals Contact
MAURITRON TECHNICAL SERVICES
8 Cherry Tree Rd, Chinnor
Oxon OX9 4QY
Tel:- 01844-351694 Fax:- 01844-352554
Email:- enquiries@mauritron.co.uk

VC-96

MX-10A

M904 IRIS MOTOR

CN651

1	DRIVE (+)
2	DRIVE (-)
3	CONT (+)
4	CONT (-)
5	BIAS (+)
6	HALL (-)
7	HALL (+)
8	BIAS (-)

CPA301

A1	NC
A2	PG CONT
A3	MODE B
A4	NC
A5	VAP OUT
A6	TP
A7	WB — G
A8	CAM Y
A9	YH
A10	CAM C
A11	YH OUT I
B1	NC
B2	NC
B3	Y LPF OUT
B4	V SUB
B5	VAP SLICE
B6	CAM ADJ
B7	YH GAIN
B8	YZ GAIN
B9	CCD DET SW
B10	GND
B11	IRIS OUT

CN653

1	AF UNREG
2	AFAF CONT
3	GND
4	FOCUS F
5	FOCUS N

CN654: UN REG, UN REG GND

CN307: Y OUT, GND, C OUT, FADER

CN306: ZOOM TELE, ZOOM WIDE, ZOOM COM

CN655: J CS, J SI, J SCK, GND

CHECK PIN (AF JIG)

CN652: ZOOM T, ZOOM W

M905 ZOOM MOTOR

S901 ZOOM SWITCH UNIT

AF BOARD

W801

1	AF UNREG
2	AF CONT
3	GND
4	FOCUS F

FP-415
0-201-926-02

W608

AA-58 0 768-324-01

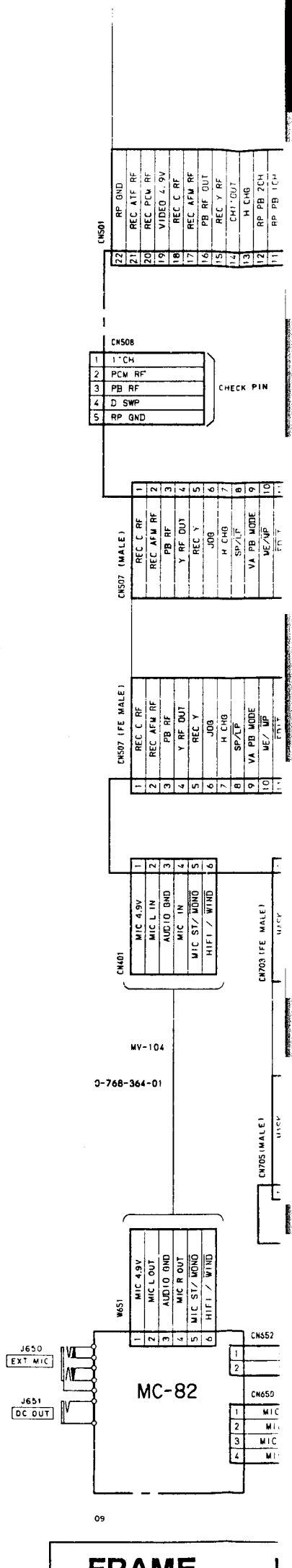
CN501
RP GND
REC ATF RF
REC PCM RF
VIDEO 4.9V
REC C RF
REC AFM RF
PB RF OUT
REC Y RF
CH1 OUT
H CHG
RP PB 2CH
RP PB 1CH
CN508
1 1CH
2 PCM RF
3 PB RF
4 D SWP
5 RP GND
CHECK PIN
CN507 (MALE)
REC C RF
REC AFM RF
PB RF
Y RF OUT
REC Y
JOG
H CHG
SP/LP
VA PB MODE
WE/WP
CN507 (FE MALE)
CN401
MIC 4.9V
MIC L IN
AUDIO GND
MIC IN
MIC ST/MONO
HIFI / WIND
CN703 (FE MALE)
MV-104
9-768-364-01
CN705 (MALE)
W651
MIC 4.9V
MIC L OUT
AUDIO GND
MIC R OUT
MIC ST/MONO
HIFI / WIND
CN552
J650
EXT MIC
J651
DC OUT
MC-82
CN650
09

FRAME

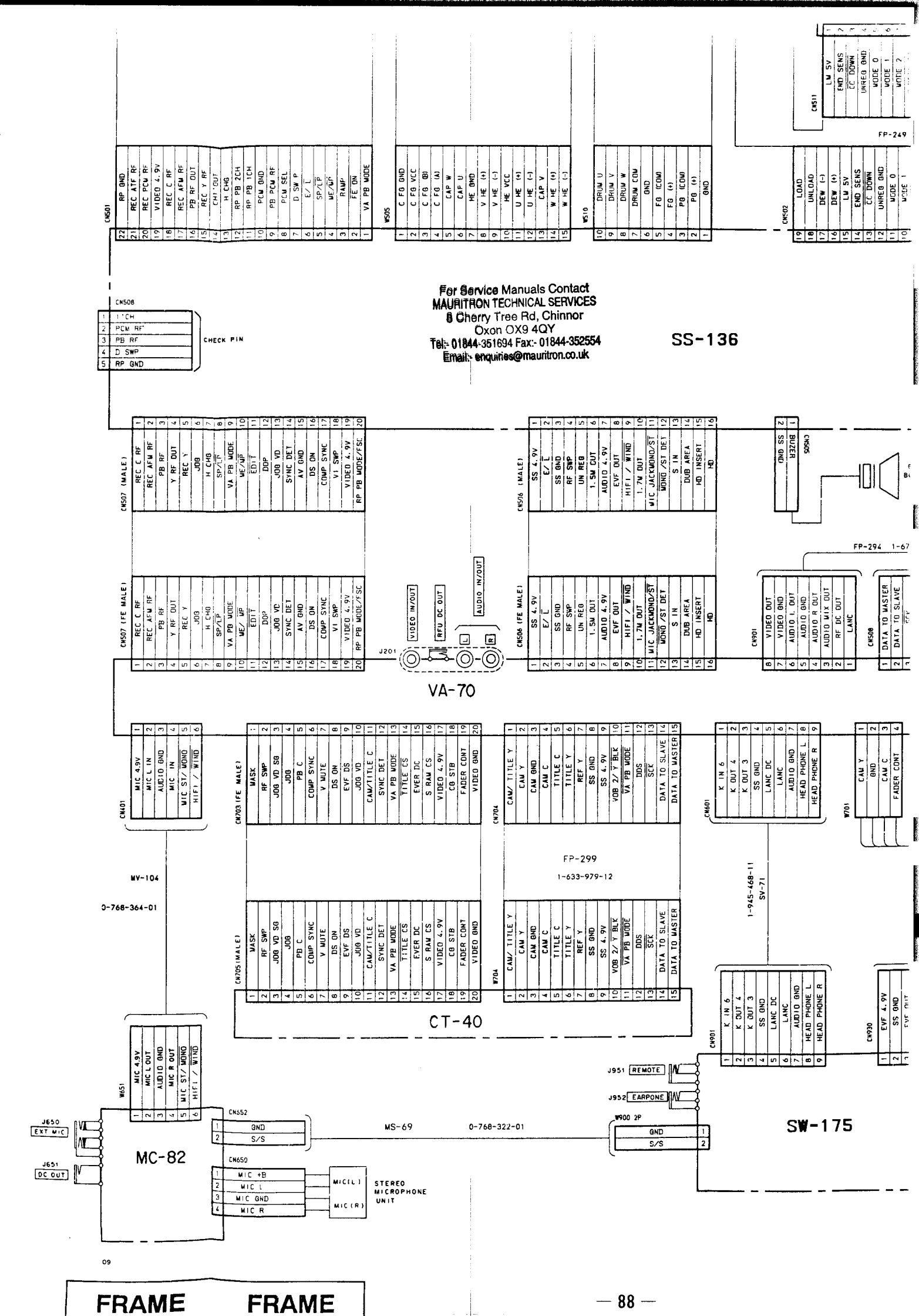

For Service Manuals Contact
MAURITRON TECHNICAL SERVICES
8 Cherry Tree Rd, Chinnor
Oxon OX9 4QY
Tel:- 01844-351694 Fax:- 01844-352554
Email:- enquiries@mauritron.co.uk
SS-136
CN501
W505
W510
CN502
CN511
FP-249
CN508
CHECK PIN
CN507 (MALE)
CN507 (FE MALE)
CN506 (MALE)
CN506 (FE MALE)
CN505
BUZER
FP-294
J201
VIDEO IN/OUT
RFU DC OUT
AUDIO IN/OUT
VA-70
CN901
CN508
CN401
CN703 (FE MALE)
CN704
CN601
W701
MV-104
0-768-364-01
FP-299
1-633-979-12
1-945-468-11
SV-71
CN705 (MALE)
W704
CT-40
CN901
CN930
W651
J951 REMOTE
J952 EARPONE
J650 EXT MIC
J651 DC OUT
MC-82
CN652
GND
S/S
MS-69
0-768-322-01
W900 2P
SW-175
CN650
MIC +B
MIC L
MIC GND
MIC R
MIC(L)
MIC(R)
STEREO MICROPHONE UNIT
09

FRAME FRAME

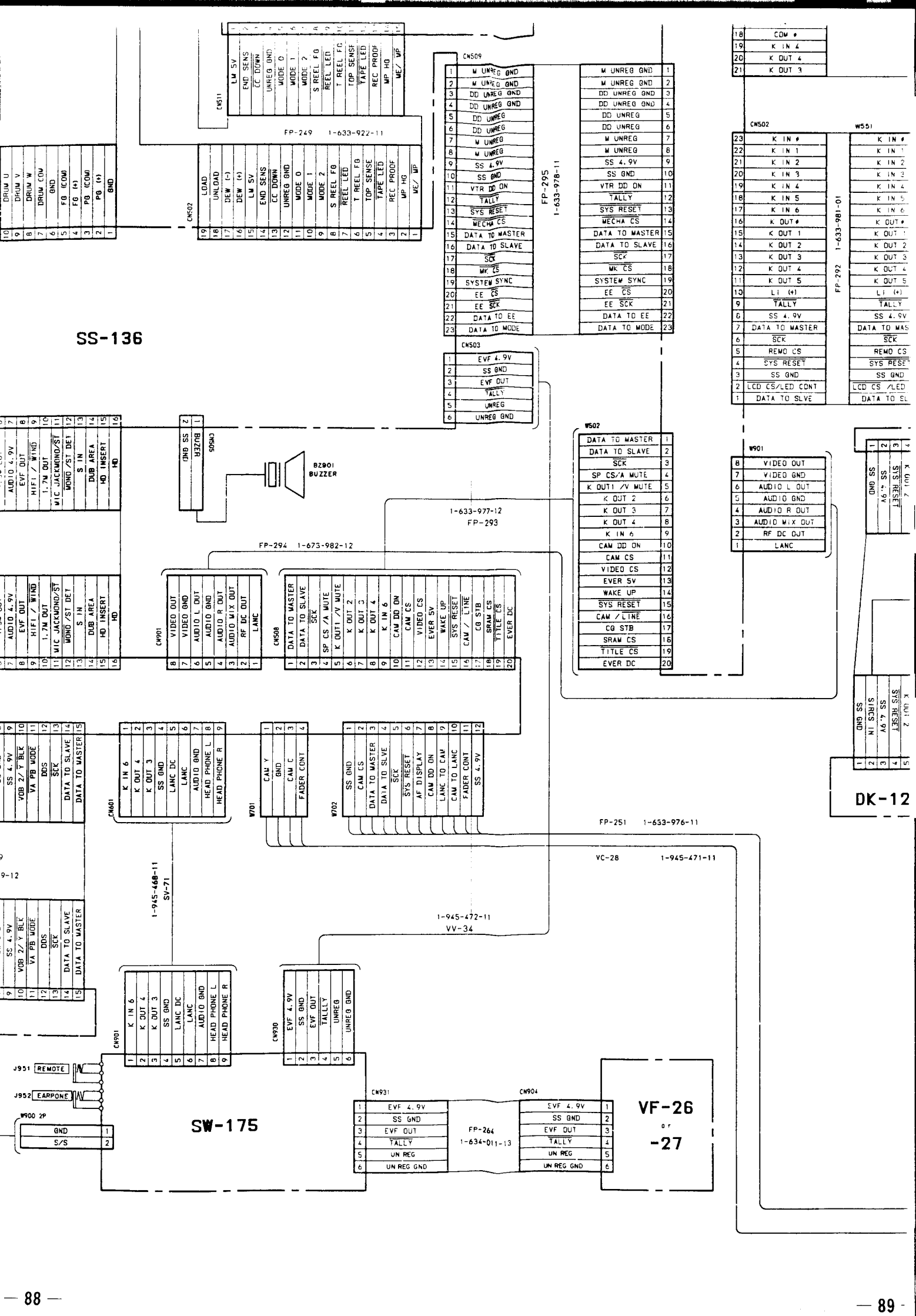
SS-136
SW-175
VF-26
or
-27
DK-12
FP-249 1-633-922-11
FP-295 1-633-978-11
FP-292 1-633-981-01
FP-294 1-673-982-12
FP-293 1-633-977-12
FP-251 1-633-976-11
VC-28 1-945-471-11
1-945-468-11 SV-71
1-945-472-11 VV-34
FP-264 1-634-011-13
BZ901 BUZZER
CN509
CN502
CN503
CN505
CN901
CN508
CN601
CN930
CN931
CN904
W551
W502
W901
W701
W702
J951 REMOTE
J952 EARPONE
W900 2P
GND
S/S

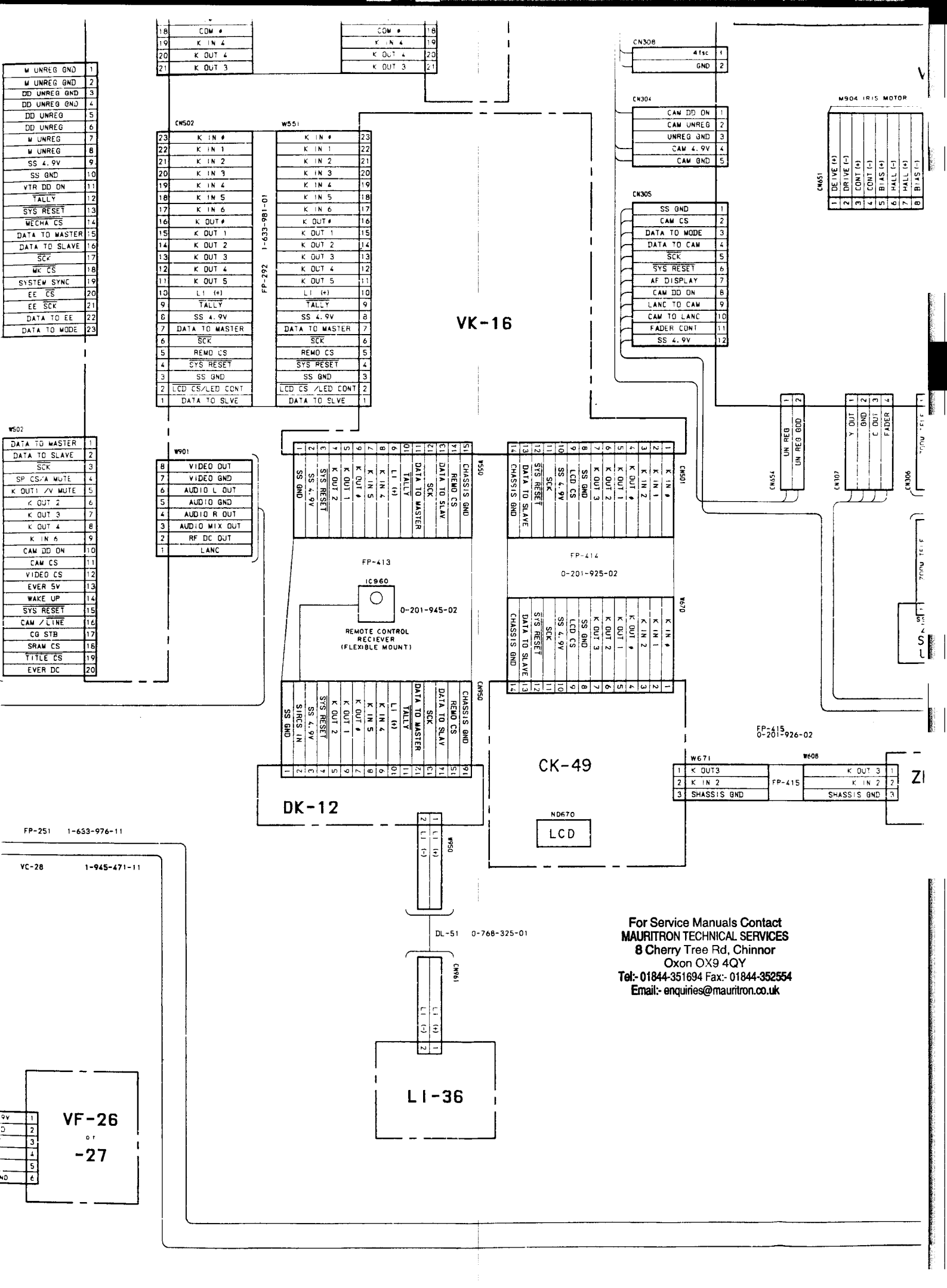

For Service Manuals Contact
MAURITRON TECHNICAL SERVICES
8 Cherry Tree Rd, Chinnor
Oxon OX9 4QY
Tel:- 01844-351694 Fax:- 01844-352554
Email:- enquiries@mauritron.co.uk

FRAME FRAME

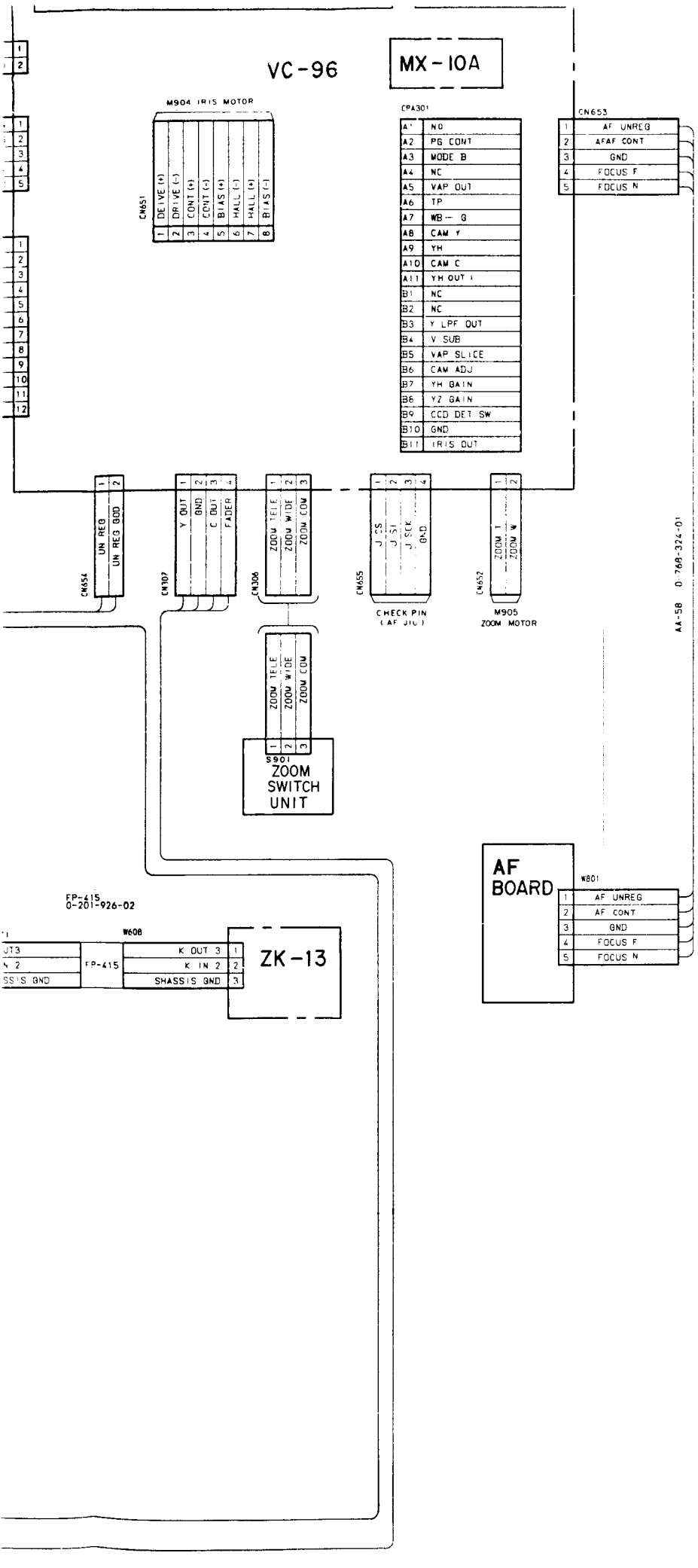
VC-96
MX-10A
M904 IRIS MOTOR
CN651
DRIVE (+)
DRIVE (-)
CONT (+)
CONT (-)
BIAS (+)
HALL (-)
HALL (+)
BIAS (-)
CPA301
A1 NC
A2 PG CONT
A3 MODE B
A4 NC
A5 VAP OUT
A6 TP
A7 WB -- G
A8 CAM Y
A9 YH
A10 CAM C
A11 YH OUT
B1 NC
B2 NC
B3 Y LPF OUT
B4 V SUB
B5 VAP SLICE
B6 CAM ADJ
B7 YH GAIN
B8 YZ GAIN
B9 CCD DET SW
B10 GND
B11 IRIS OUT
CN653
AF UNREG
AFAF CONT
GND
FOCUS F
FOCUS N
CN654
UN REG
UN REG GOD
CN307
Y OUT
GND
C OUT
FADER
CN308
ZOOM TELE
ZOOM WIDE
ZOOM COM
CN655
J CS
J SI
J SCK
GND
CHECK PIN
(AF UIC)
CN652
ZOOM T
ZOOM W
M905
ZOOM MOTOR
AA-58 0-768-324-01
S901
ZOOM
SWITCH
UNIT
AF
BOARD
W801
AF UNREG
AF CONT
GND
FOCUS F
FOCUS N
FP-415
0-201-926-02
W608
K OUT 3
K IN 2
SHASSIS GND
FP-415
ZK-13

ME FRAME

THIS NOTE IS COMMON FOR PRINTED WIRING BOARDS AND SCHEMATIC DIAGRAMS.

(In addition to this , the necessary note is printed in each block.)

- **For printed wiring boards.**
- ○— : indicated a lead wire mounted on the component side.
- —— : indicated a lead wire mounted on the conductor side.
- ■ : Parts mounted on the conductor side.
- : Pattern from the side which enables seeing.
- : Pattern of the rear side.
- Circled numbers refer to waveforms.
- (B) or (F), etc. of capacitors indicate the temperature characteristics.
- ● : Through hole.

Caution:	
Pattern face side: (Conductor Side)	Parts on the pattern face side seen from the pattern face are indicated.
Parts face side: (Component side)	Parts on the parts face side seen from the pattern face are indicated.

- **For schematic diagrams.**
- Caution when replacing chip parts.
  New parts must be attached after removal of chip.
  Be careful not to heat the minuts side of tantalum capacitor, because it is damaged by the heat.
- All resistors are in ohms, 1/4W unless otherwise noted.
  Chip resistor are 1/10W unless otherwise noted.
  kΩ : 1000Ω , MΩ : 1000kΩ .
- All capacitors are in μF unless otherwise noted. pF: μμF.
  50V or less are not indicated except for electrolytics and tantalums.
- All variable and adjustable resistors have characteristic curve B, unless otherwise noted.
- : nonflammable resistor.
- : fusible resistor.
- : panel designation.
- △ : internal component.
- : adjustment for repeair.
- —— : B+ Line.
- - - - : B– Line.
- : IN/OUT direction of (+, –) B LINE.
- Circled numbers refer to waveforms.

Note:
The components identi- fied by mark ⚠ or dotted line with mark ⚠ are critical for safty.
Replace only with part number specified.

When indicating parts by reference number, please include the board name.

- **Measuring conditions voltage value and waveform. (CAMERA, DIGITAL TITLE block)**
- The object is color bar chart of pattern box.
- Voltages are dc between ground and measurement points. Readings are taken with a digital multimeter (DC 10MΩ).
- Voltage variations may be noted due to normal production tolerances.

1. Connection

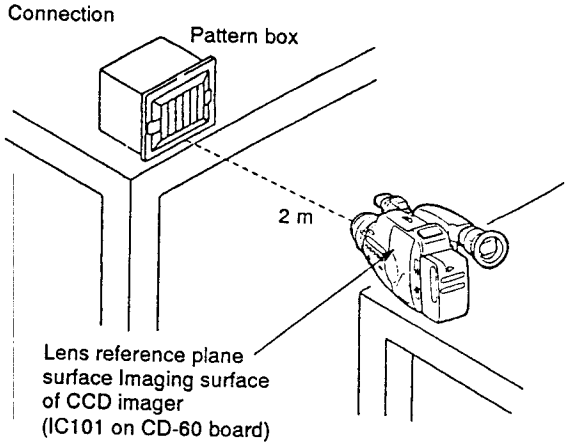

2. Adjust the distance so that the output waveform of Fig. a and the Fig. b can be obtain.

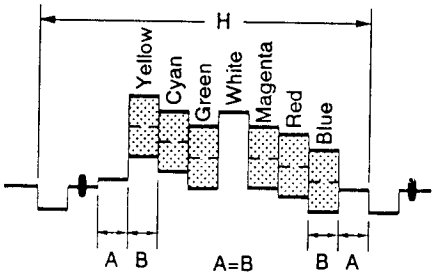

Fig. a (Video output terminal output waveform

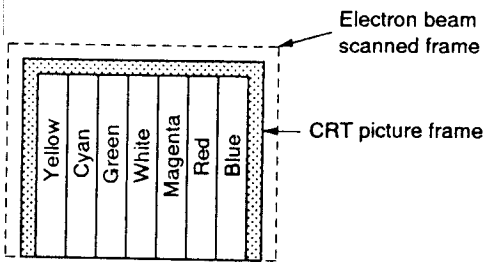

Fig. (Picture on monitor TV)

For Service Manuals Contact
MAURITRON TECHNICAL SERVICES
8 Cherry Tree Rd, Chinnor
Oxon OX9 4QY
Tel:- 01844-351694 Fax:- 01844-352554
Email:- enquiries@mauritron.co.uk

veform.

points.
MΩ).
production

Fig. a and

n

(VIDEO, SERVO/SYSTEM CONTROL, MODE CONTROL, VIEW FINDER block)

- Voltages are dc between ground and measurement points.
- Readings are taken with a color-bar signal input.
- Readings are taken with a digital multimeter (DC10MΩ).
- Voltage variations may be noted due to normal production tolerances.

There are not the external input terminal (VIDEO/AUDIO IN) and REC switch in AEP, UK model. Accordingly, perform as the followings for REC mode.

Signal input: Refer to the video signal input method for the model without the external input terminal described in VIDEO BLOCK ADJUSTMENTS (page 278, Fig. 10-1).

REC model: Refer to the transition method to REC mode for the model without the external input terminal in the same Fig. 10-2.

CC-60 (CCD IMAGER) PRINTED WIRING BOARD

— Ref. No. CD-60 BOARD: 6000 series —

* A-7062-777-A CD-60P BOARD, COMPLETE
****
(Ref. No 6,000 Series)

< DIODE >

D101	8-719-404-46	DIODE	MA110
D102	8-719-404-52	DIODE	MA143
D122	8-719-404-32	DIODE	MA141WA
D123	8-719-404-46	DIODE	MA110
D124	8-719-404-32	DIODE	MA141WA
D125	8-719-949-46	DIODE	1T32
D128	8-719-404-46	DIODE	MA110

< IC >

IC121	8-752-326-08	IC	CXD1159Q

< TRANSISTOR >

Q101	8-765-420-02	TRANSISTOR	2SK300-3/4
Q102	8-729-905-35	TRANSISTOR	2SC4081
Q121	8-729-907-47	TRANSISTOR	IMZ1
Q122	8-729-402-78	TRANSISTOR	XN6401
Q123	8-729-402-19	TRANSISTOR	XN6501
Q125	8-729-905-35	TRANSISTOR	2SC4081
Q126	8-729-907-47	TRANSISTOR	IMZ1
Q129	8-729-905-23	TRANSISTOR	2SA1576
Q130	8-729-905-35	TRANSISTOR	2SC4081
Q131	8-729-907-47	TRANSISTOR	IMZ1
Q132	8-729-907-47	TRANSISTOR	IMZ1
Q133	8-729-907-47	TRANSISTOR	IMZ1
Q135	8-729-907-47	TRANSISTOR	IMZ1
Q136	8-729-402-45	TRANSISTOR	UN5212

) IMAGER) PRINTED WIRING BOARD

-60 BOARD: 6000 series —

, CD-60P BOARD, COMPLETE
****
(Ref. No 6,000 Series)

< DIODE >

-404-46 DIODE MA110
-404-52 DIODE MA143
-404-32 DIODE MA141WA
-404-46 DIODE MA110
-404-32 DIODE MA141WA

-949-46 DIODE 1T32
-404-46 DIODE MA110

< IC >

-326-08 IC CXD1159Q

< TRANSISTOR >

-420-02 TRANSISTOR 2SK300-3/4
-905-35 TRANSISTOR 2SC4081
-907-47 TRANSISTOR IMZ1
-402-78 TRANSISTOR XN6401
-402-19 TRANSISTOR XN6501

-905-35 TRANSISTOR 2SC4081
-907-47 TRANSISTOR IMZ1
-905-23 TRANSISTOR 2SA1576
-905-35 TRANSISTOR 2SC4081
-907-47 TRANSISTOR IMZ1

-907-47 TRANSISTOR IMZ1
-907-47 TRANSISTOR IMZ1
-907-47 TRANSISTOR IMZ1
-402-45 TRANSISTOR UN5212

CD-60 BOARD (COMPONENT SIDE)

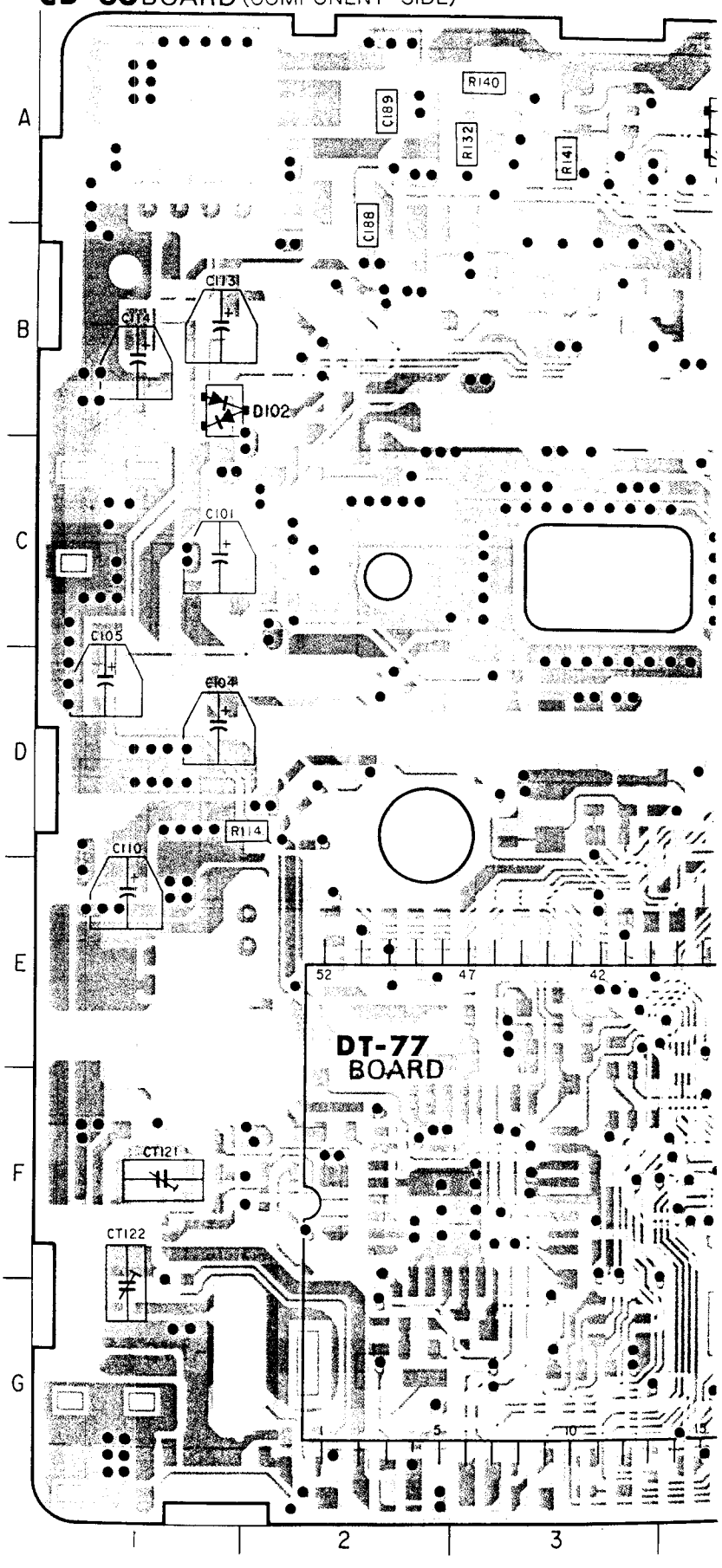

09

For Service Manuals Contact
MAURITRON TECHNICAL SERVICES
8 Cherry Tree Rd, Chinnor
Oxon OX9 4QY
Tel:- 01844-351694 Fax:- 01844-352554
Email:- enquiries@mauritron.co.uk

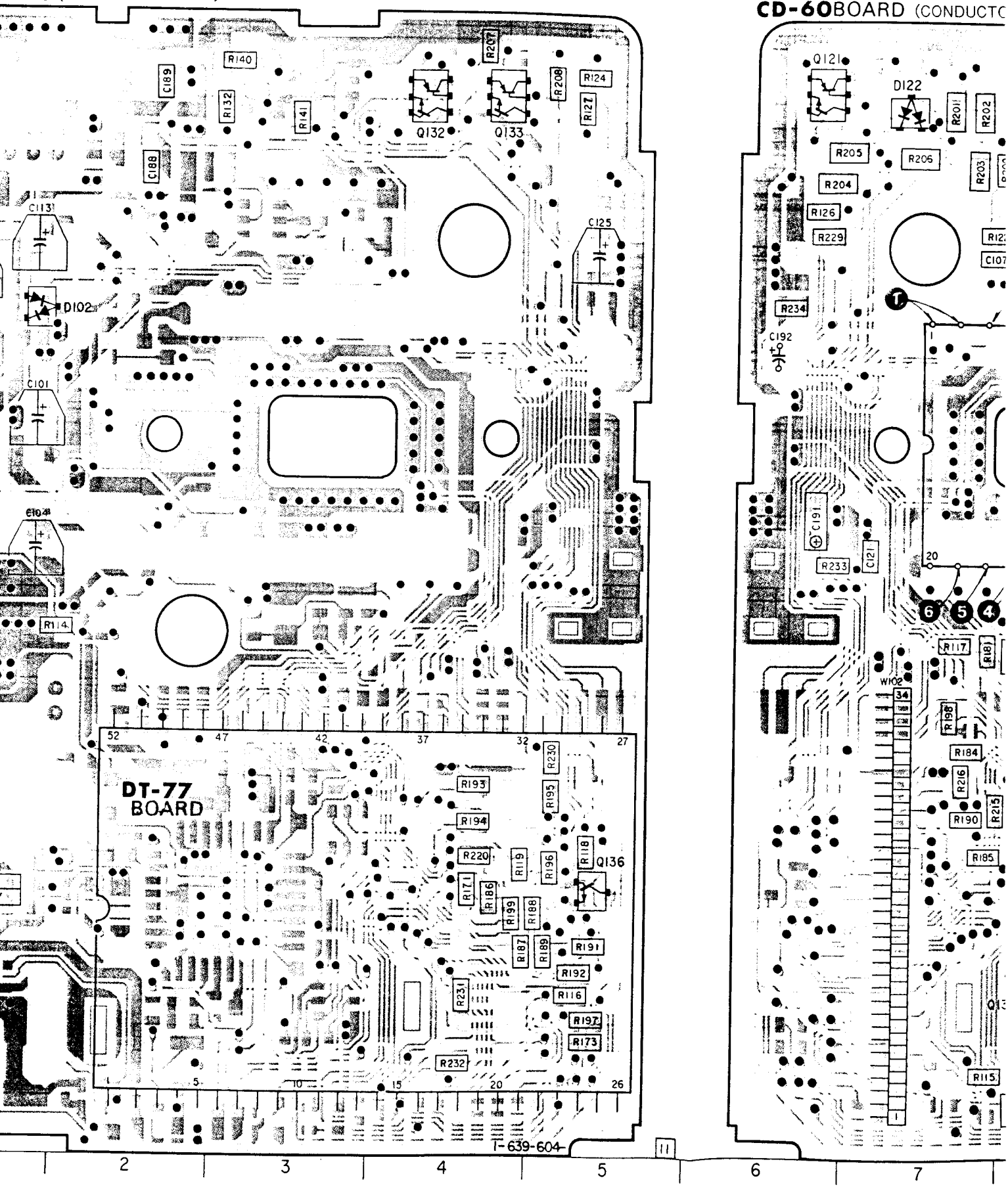

CAMERA CAMERA

CD-60BOARD (CONDUCTOR SIDE)

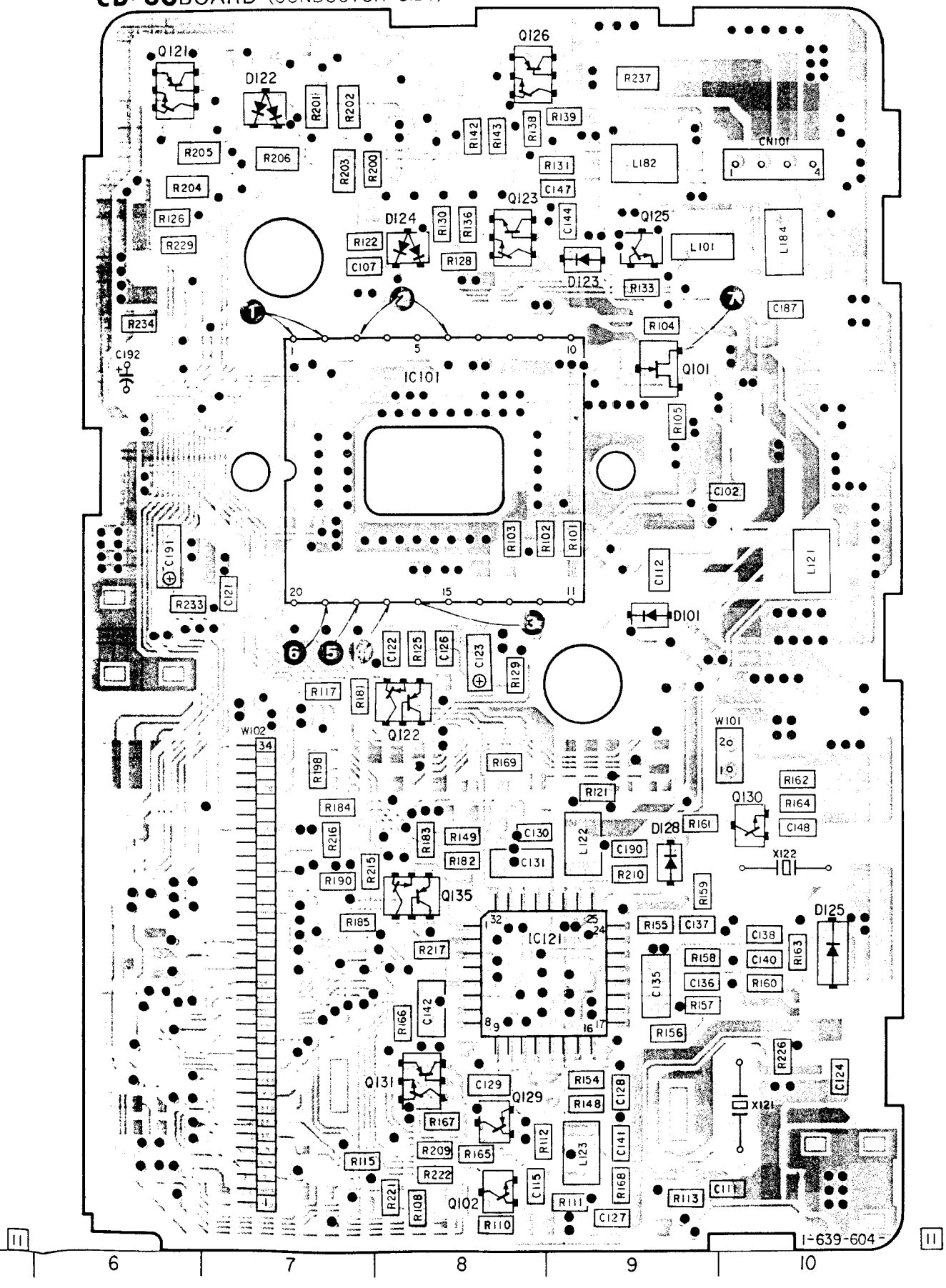

For Service Manuals Contact
MAURITRON TECHNICAL SERVICES
8 Cherry Tree Rd, Chinnor
Oxon OX9 4QY
Tel: 01844-351694 Fax:- 01844-352554
Email: enquiries@mauritron.co.uk

— Ref. No. CD-60 BOARD: 6000 series —

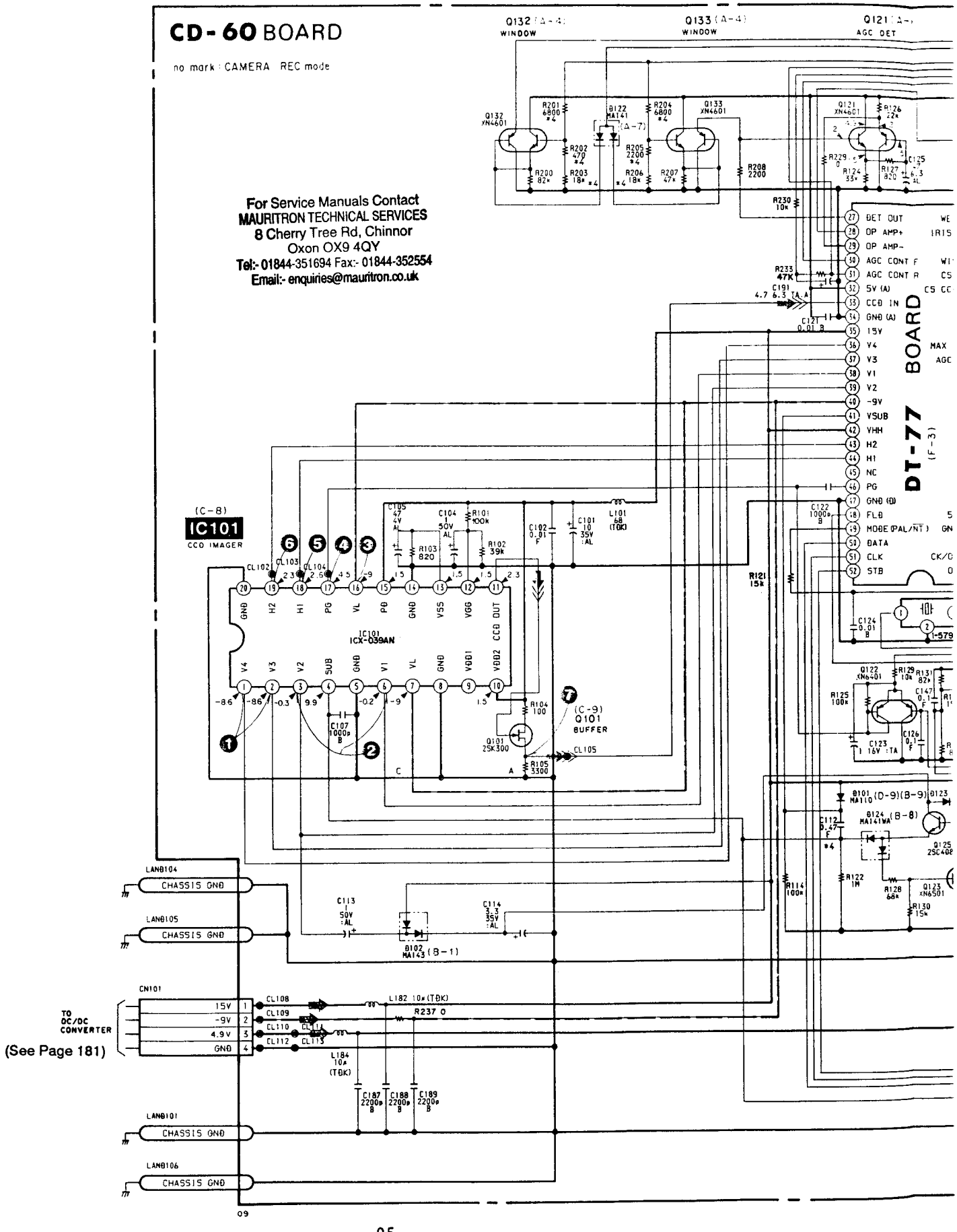

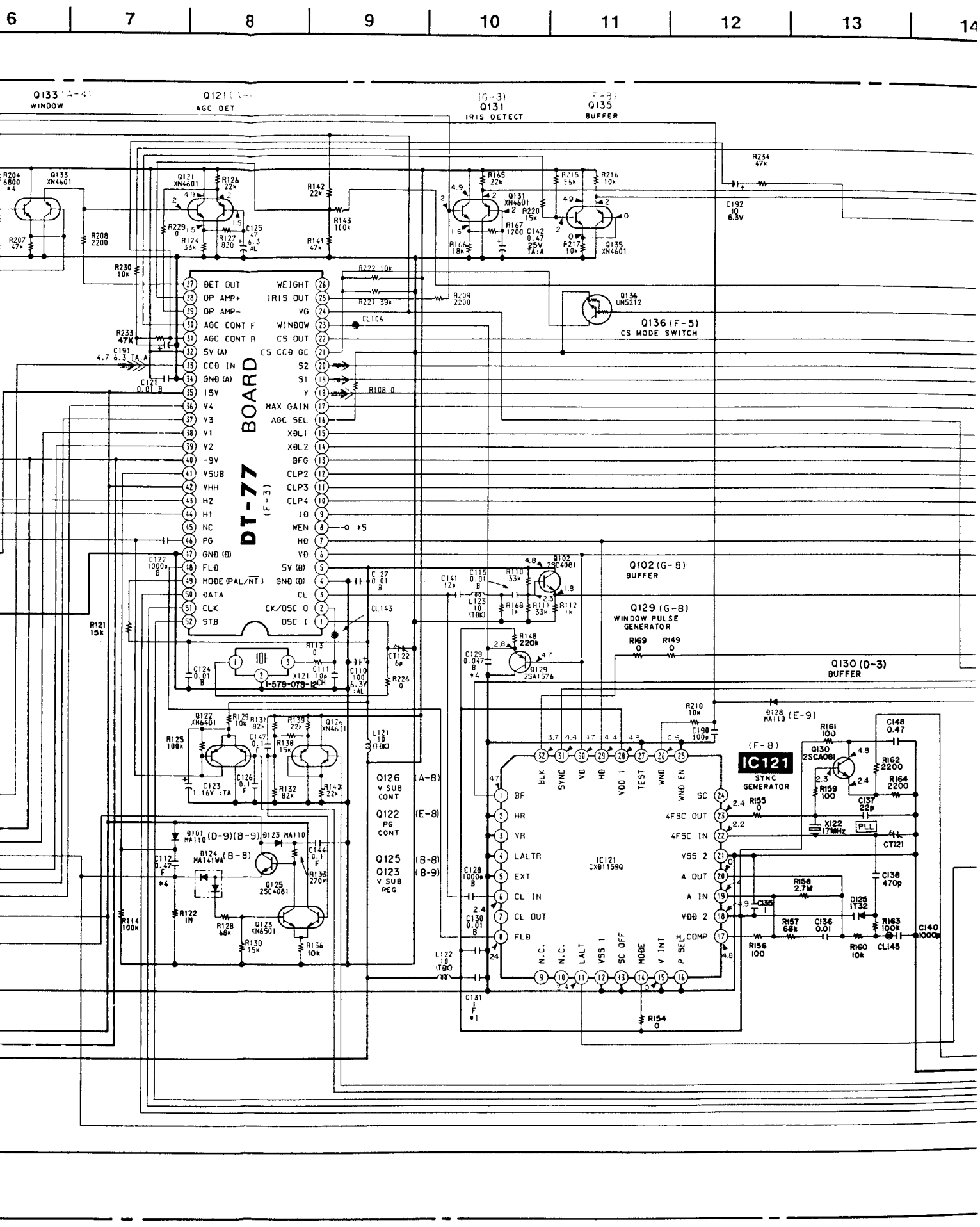
6
7
8
9
10
11
12
13
14
Q133 (A-4)
WINDOW
Q121 (A-
AGC DET
(G-3)
Q131
IRIS DETECT
(F-3)
Q135
BUFFER
Q136 (F-5)
CS MODE SWITCH
DT-77 BOARD
(F-3)
DET OUT
OP AMP+
OP AMP-
AGC CONT F
AGC CONT R
5V (A)
CCD IN
GND (A)
15V
V4
V3
V1
V2
-9V
VSUB
VHH
H2
H1
NC
PG
GND (D)
FLD
MODE (PAL/NT)
DATA
CLK
STB
WEIGHT
IRIS OUT
VG
WINDOW
CS OUT
CS CCD GC
S2
S1
Y
MAX GAIN
AGC SEL
XDL1
XDL2
BFG
CLP2
CLP3
CLP4
ID
WEN
HD
VD
5V (D)
GND (D)
CL
CK/OSC O
OSC I
Q102 (G-8)
BUFFER
Q129 (G-8)
WINDOW PULSE GENERATOR
Q130 (D-3)
BUFFER
Q126 (A-8)
V SUB CONT
Q122 (E-8)
PG CONT
Q125 (B-8)
Q123 (B-9)
V SUB REG
(F-8)
IC121
SYNC GENERATOR
IC121 CXD1159Q
BLK
SYNC
VD
HD
VDD 1
TEST
WND
WND EN
BF
HR
VR
LALTR
EXT
CL IN
CL OUT
FLD
SC
4FSC OUT
4FSC IN
VSS 2
A OUT
A IN
VDD 2
H COMP
N.C.
N.C.
LALT
VSS 1
SC OFF
MODE
V INT
P SEL
X122 17MHz
PLL
CT121
CL145
Q125 2SC4081
Q123 XN6501
Q130 2SCA081
Q129 2SA1576
Q102 2SC4081
Q136 UN5212
Q133 XN4601
Q121 XN4601
Q131 XN4601
Q135 XN4601
Q122 XN6401
Q126 XN4601
X121 1-579-078-12
D101 MA110 (D-9)(B-9)
D123 MA110
D124 MA141WA (B-8)
D128 MA110 (E-9)
D125 1T32
R234 47k
C192 10 6.3V
R209 2200
R222 10k
R221 39k
R108 0
R233 47K
C191 4.7 6.3 TA:A
C121 0.01 B
R121 15k
R114 100k
R122 1M
R128 68k
R130 15k
R136 10k
R133 270k
R125 100k
R129 10k
R131 82k
R139 22k
R138 15k
R132 82k
R143 22k
R113 0
C111 10p
C110 100 6.3V :AL
C124 0.01 B
C122 1000p B
C127 0.01 B
C141 12p
C115 0.01 B
L123 10 (TBK)
R110 33k
R168 1k
R111 33k
R112 1k
R148 220k
C129 0.047 B
R169 0
R149 0
R210 10k
C190 100p
R161 100
C148 0.47
R162 2200
R164 2200
R159 100
C137 22p
R155 0
C138 470p
R158 2.7M
R157 68k
C136 0.01
R163 100k
C140 1000p
R156 100
R160 10k
R154 0
C128 1000p B
C130 0.01 B
C131 1 F *1
L121 10 (TBK)
L122 10 (TBK)
C112 0.47 F *4
C144 0.1 F
C126 0.1 F
C123 1 16V :TA
C147 0.1 F
C125 47 6.3 AL
R124 33k
R127 820
R229 0
R142 22k
R143 100k
R141 47k
R165 22k
R167 1200
R166 18k
R220 15k
C142 0.47 25V TA:A
R215 55k
R216 10k
R217 10k
R207 47k
R208 2200
R204 6800 *4
R230 10k
C122 1000p B
C124 0.01 B
C127 0.01 B
CL143
CT122 6p
R226 0
R121 15k
R114 100k
R122 1M
R128 68k
R130 15k
R136 10k
R133 270k
R125 100k
R129 10k
R131 82k
R139 22k
R138 15k
R132 82k
R143 22k
C112 0.47 F *4
C144 0.1 F
C126 0.1 F
C123 1 16V :TA
C147 0.1 F
C128 1000p B
C130 0.01 B
C131 1 F *1
C135 1
C136 0.01
C140 1000p
R163 100k
R160 10k
R154 0
R156 100
R157 68k
R158 2.7M
R159 100
R161 100
R162 2200
R164 2200
C137 22p
C138 470p
C148 0.47
R155 0
R169 0
R149 0
R148 220k
C129 0.047 B *4
R210 10k
C190 100p
R168 1k
R111 33k
R112 1k
R110 33k
C141 12p
C115 0.01 B
L123 10 (TBK)
C127 0.01 B
C124 0.01 B
C111 10p
C110 100 6.3V :AL
R226 0
R113 0
R209 2200
R222 10k
R221 39k
R108 0
R233 47K
C191 4.7 6.3 TA:A
C121 0.01 B
R121 15k
R234 47k
C192 10 6.3V
R204 6800 *4
R207 47k
R208 2200
R230 10k
R124 33k
R127 820
R229 0
R125 47 6.3 AL
R126 22k
R142 22k
R143 100k
R141 47k
R165 22k
R167 1200
R166 18k
R220 15k
C142 0.47 25V TA:A
R215 55k
R216 10k
R217 10k

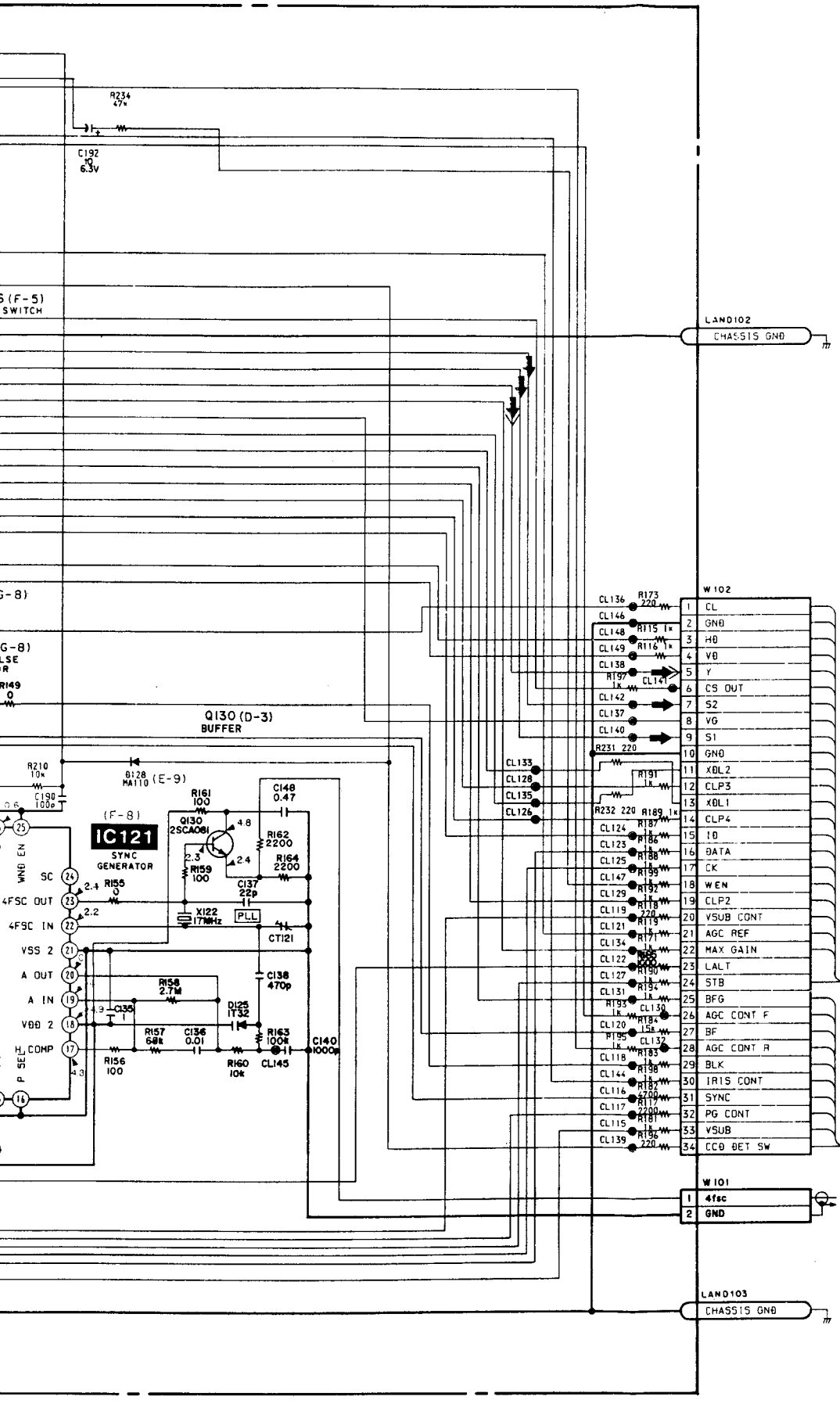

(See Page 103)

(See Page 106)

For Service Manuals Contact
MAURITRON TECHNICAL SERVICES
8 Cherry Tree Rd, Chinnor
Oxon OX9 4QY
Tel:- 01844-351694 Fax:- 01844-352554
Email:- enquiries@mauritron.co.uk

• SIGNAL PATH

	CHROM
REC	➡
PB	

CAUTIONS FOR REPLACING THE CCD IMAGER

- According to type of CCD imager (IC101 on the CD-60 board), it is necessary to require the compensating ROM (IC001 on the DT-77F board).
  The repairing CCD imager does not require the compensating ROM.
  So when replacing the CCD imager on which the compensating ROM is installed, remove the compensating ROM before replacement.
- Since the mounted CD-60 and DT-77F boards which are supplied as a repair parts are not installed IC101 and IC001 respectively, replace the respective ICs from the previous board to the new when replacing each board.
- When you replaced the CCD imager, perform the overall camera head adjustment.
- CCD imager has such a structure that it may be spoiled by static electricity, so handle it with a care similar for MOS IC. Further, be sure that the light receiving part has no stick of dust and no entry of bright light.

CD-60 BOARD

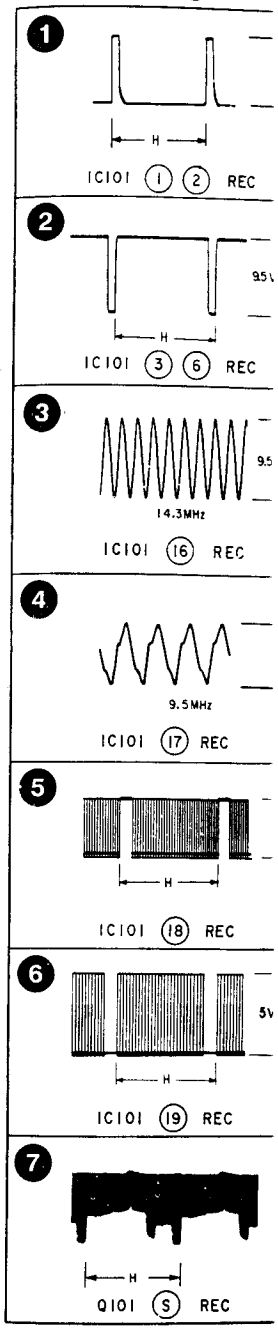

FP-416 FLEXIBLE (1/2)

TO VC-96 BOARD CN301

(See Page 103)

FP-416 FLEXIBLE (2/2)

TO VC-96 BOARD CN302

TO VC-96 BOARD CN308

(See Page 106)

• **SIGNAL PATH**

	VIDEO SIGNAL			AUDIO SIGNAL
	CHROMA	Y	Y/CHROMA/DATA	
REC	➡	➡≫	➡⋙	
PB				

CD-60 BOARD

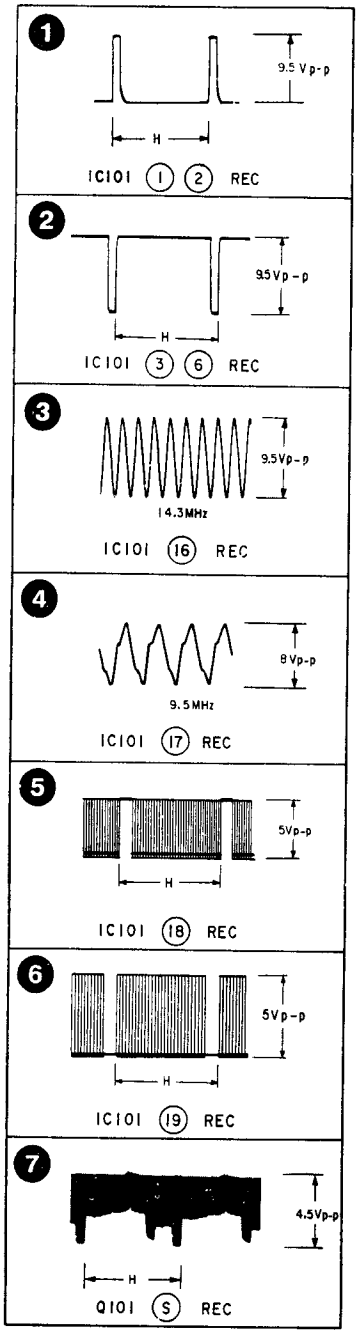

For Service Manuals Contact
MAURITRON TECHNICAL SERVICES
8 Cherry Tree Rd, Chinnor
Oxon OX9 4QY
Tel:- 01844-351694 Fax:- 01844-352554
Email:- enquiries@mauritron.co.uk

VC-96 BOARD(1/2)

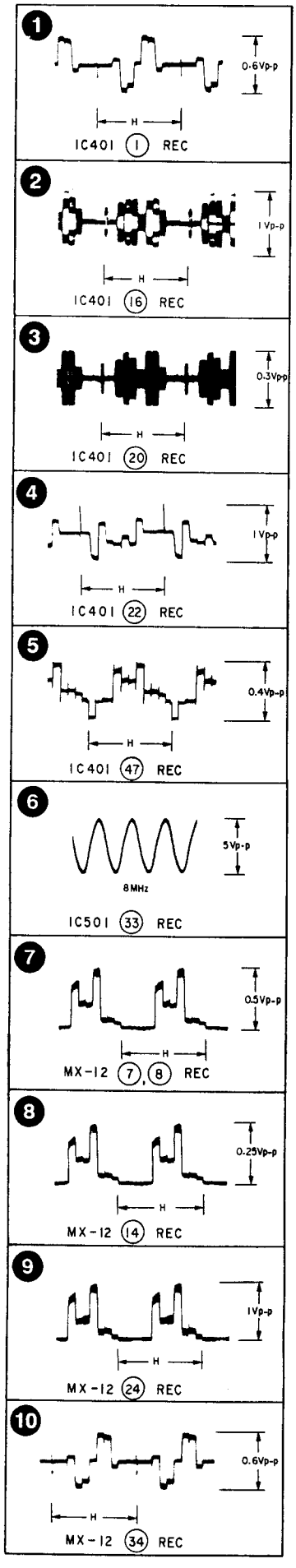

VC-96 (CAMERA PROCESS) PRINTED WIRING BOARD

— Ref. No. VC-96 BOARD: 6000 series —

* A-7062-776-A VC-96P BOARD, COMPLETE

****

(Ref. No 6,000 Series)

< DIODE >

D501	8-719-404-46	DIODE	MA110
D502	8-719-404-46	DIODE	MA110
D503	8-719-404-46	DIODE	MA110
D504	8-719-404-46	DIODE	MA110
D651	8-719-976-90	DIODE	DTZ4.3A

< IC >

IC301	8-759-635-27	IC	M62352GP
IC401	8-752-038-XX	IC	CXA1392R
IC501	8-759-038-85	IC	MC68HC11E9FU-SC400226
IC504	8-759-635-27	IC	M62352GP
IC508	8-759-937-56	IC	S-8054ALB-LM
IC509	8-759-509-05	IC	XRU4066BF
IC510	8-759-998-96	IC	LM324DR
IC651	8-759-981-82	IC	RC3414M
IC652	8-759-998-96	IC	LM324DR
IC653	8-759-500-11	IC	MM1036XFF
IC656	8-759-998-96	IC	LM324DR

< TRANSISTOR >

Q301	8-729-905-23	TRANSISTOR	2SA1576
Q302	8-729-905-23	TRANSISTOR	2SA1576
Q303	8-729-907-47	TRANSISTOR	IMZ1
Q401	8-729-907-47	TRANSISTOR	IMZ1
Q402	8-729-907-47	TRANSISTOR	IMZ1
Q403	8-729-905-23	TRANSISTOR	2SA1576
Q404	8-729-905-35	TRANSISTOR	2SC4081
Q504	8-729-925-39	TRANSISTOR	IMH8
Q505	8-729-925-39	TRANSISTOR	IMH8
Q506	8-729-925-77	TRANSISTOR	IMH6
Q507	8-729-420-50	TRANSISTOR	UN5215
Q508	8-729-402-78	TRANSISTOR	XN6401
Q509	8-729-925-39	TRANSISTOR	IMH8
Q510	8-729-905-35	TRANSISTOR	2SC4081
Q513	8-729-907-47	TRANSISTOR	IMZ1
Q516	8-729-905-35	TRANSISTOR	2SC4081
Q652	8-729-402-42	TRANSISTOR	UN5213
Q653	8-729-905-23	TRANSISTOR	2SA1576
Q654	8-729-106-60	TRANSISTOR	2SB1115A
Q655	8-729-905-35	TRANSISTOR	2SC4081
Q656	8-729-821-88	TRANSISTOR	2SK1332-3

For Service Manuals Contact
MAURITRON TECHNICAL SERVICES
8 Cherry Tree Rd, Chinnor
Oxon OX9 4QY
Tel:- 01844-351694 Fax:- 01844-352554
Email:- enquiries@mauritron.co.uk

VC-96 BOARD (

A B C D E F

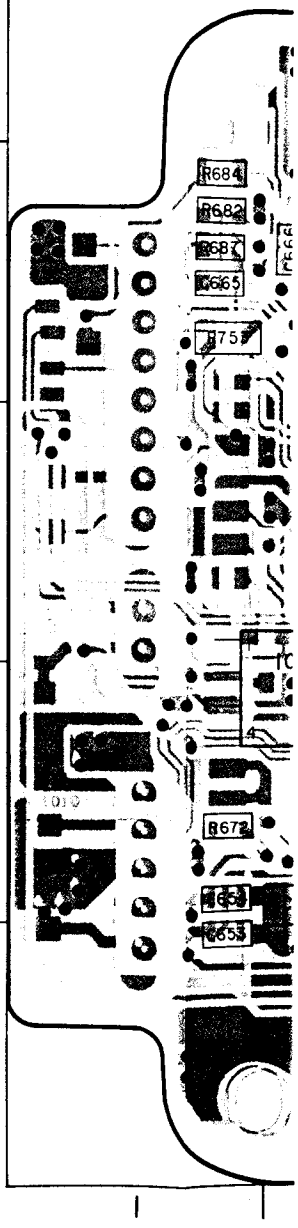

09

VC-96 BOARD (COMPONENT SIDE)

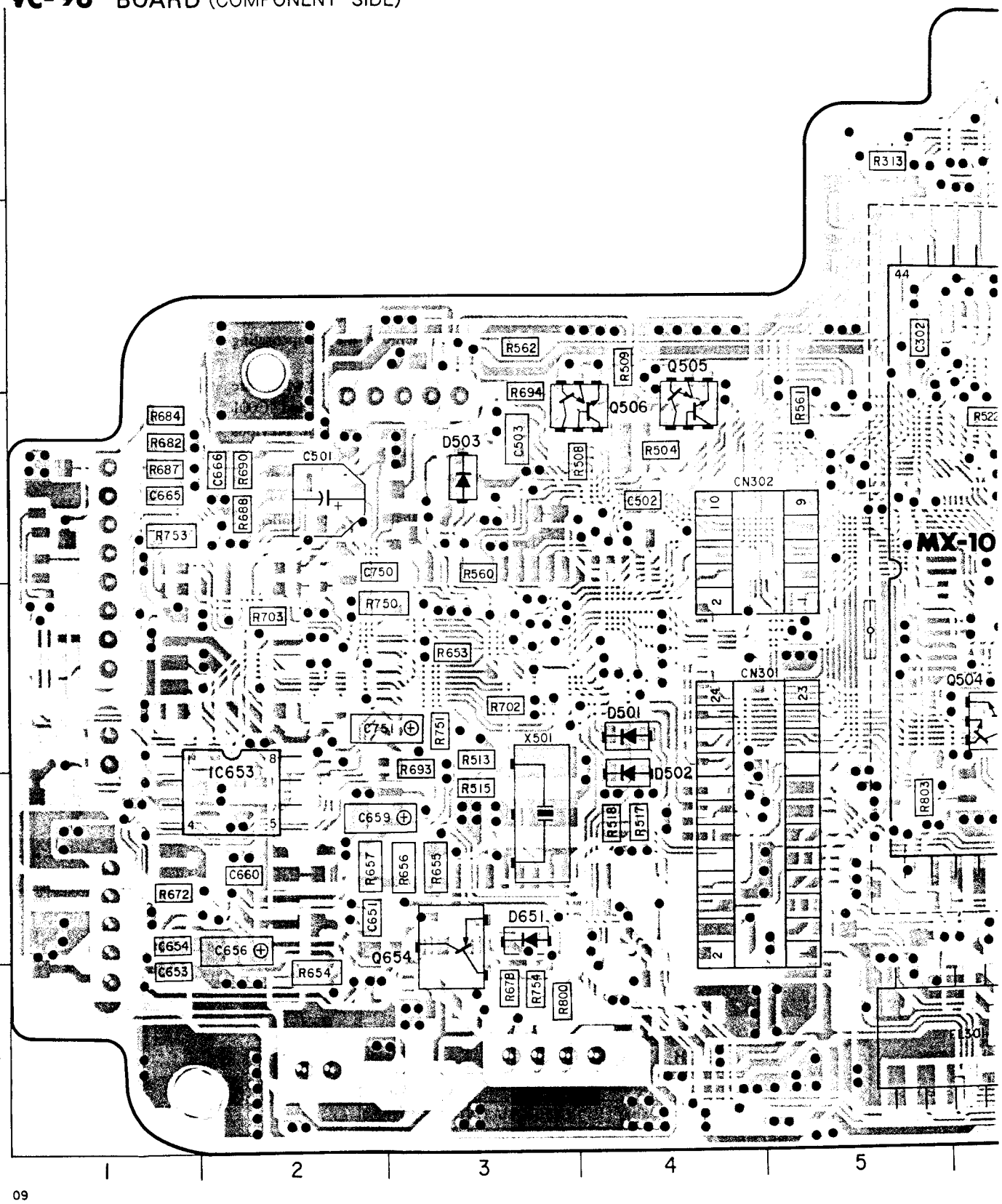

CAMERA CAMERA

For Service Manuals Contact
MAURITRON TECHNICAL SERVICES
8 Cherry Tree Rd, Chinnor
Oxon OX9 4QY
Tel:- 01844-351694 Fax:- 01844-352554
Email:- enquiries@mauritron.co.uk

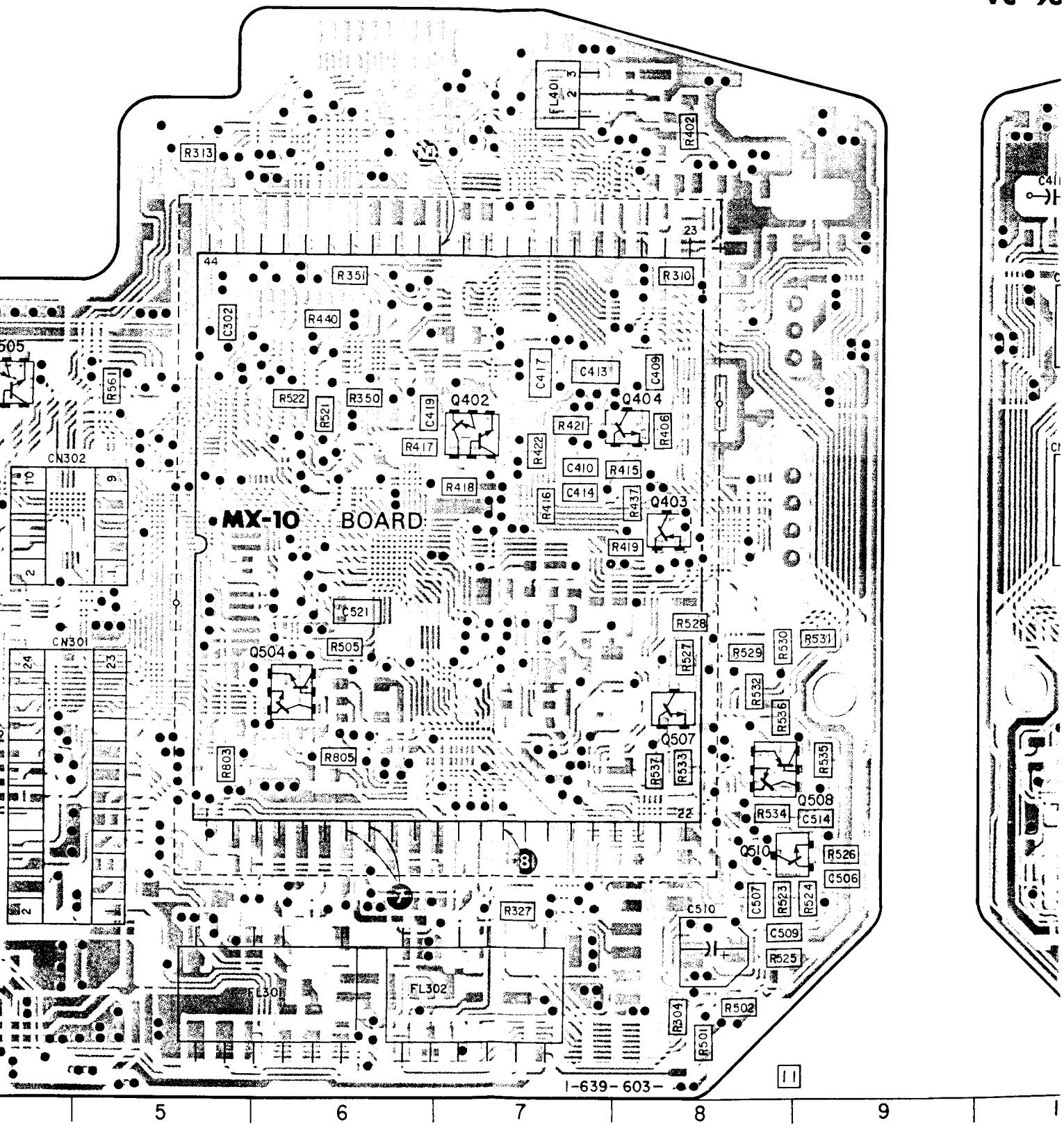

VC-96 BOARD (CONDUCTOR SIDE)

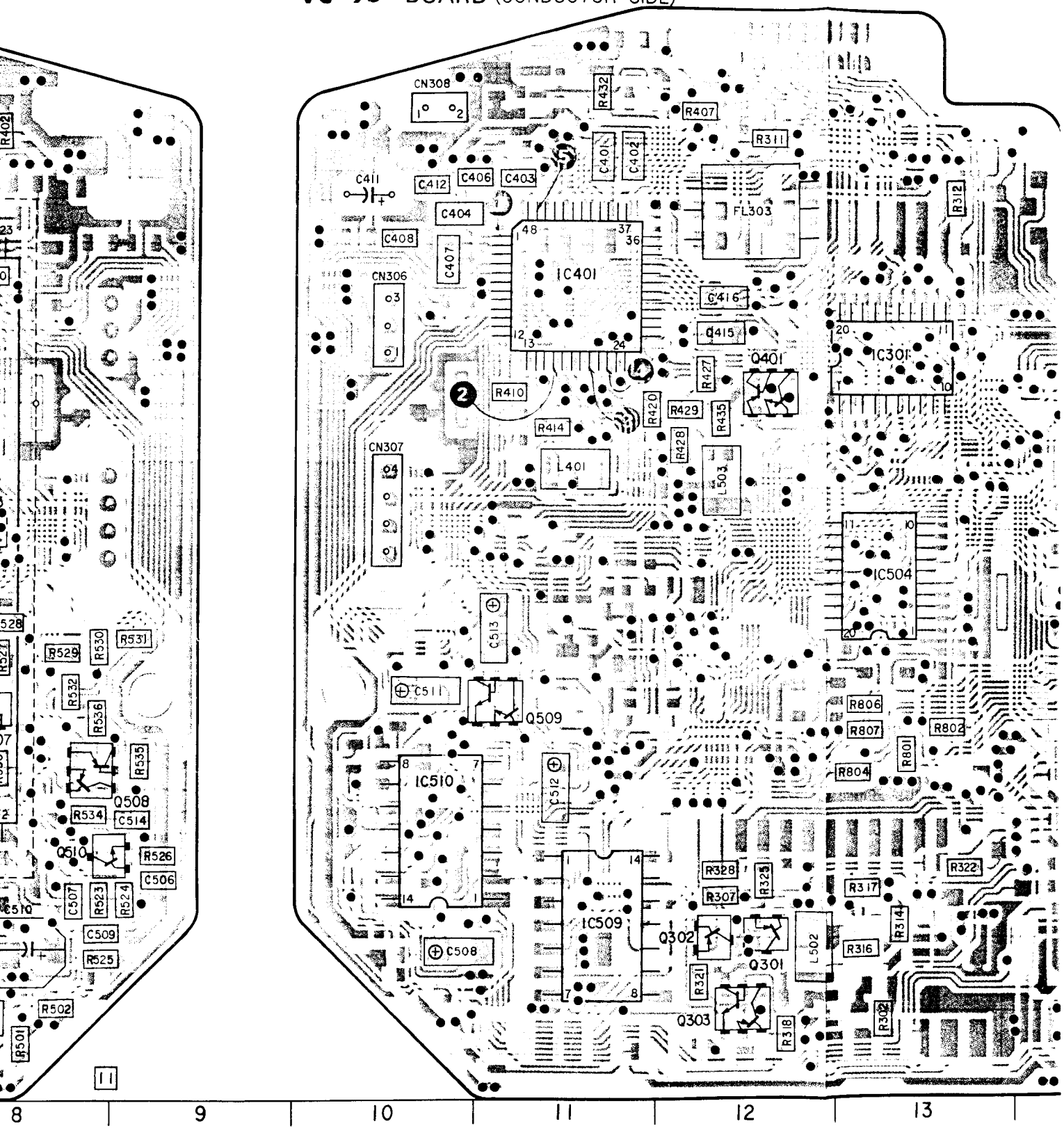

For Service Manuals Contact
MAURITRON TECHNICAL SERVICES
8 Cherry Tree Rd, Chinnor
Oxon OX9 4QY
Tel:- 01844-351694 Fax:- 01844-352554
Email:- enquiries@mauritron.co.uk

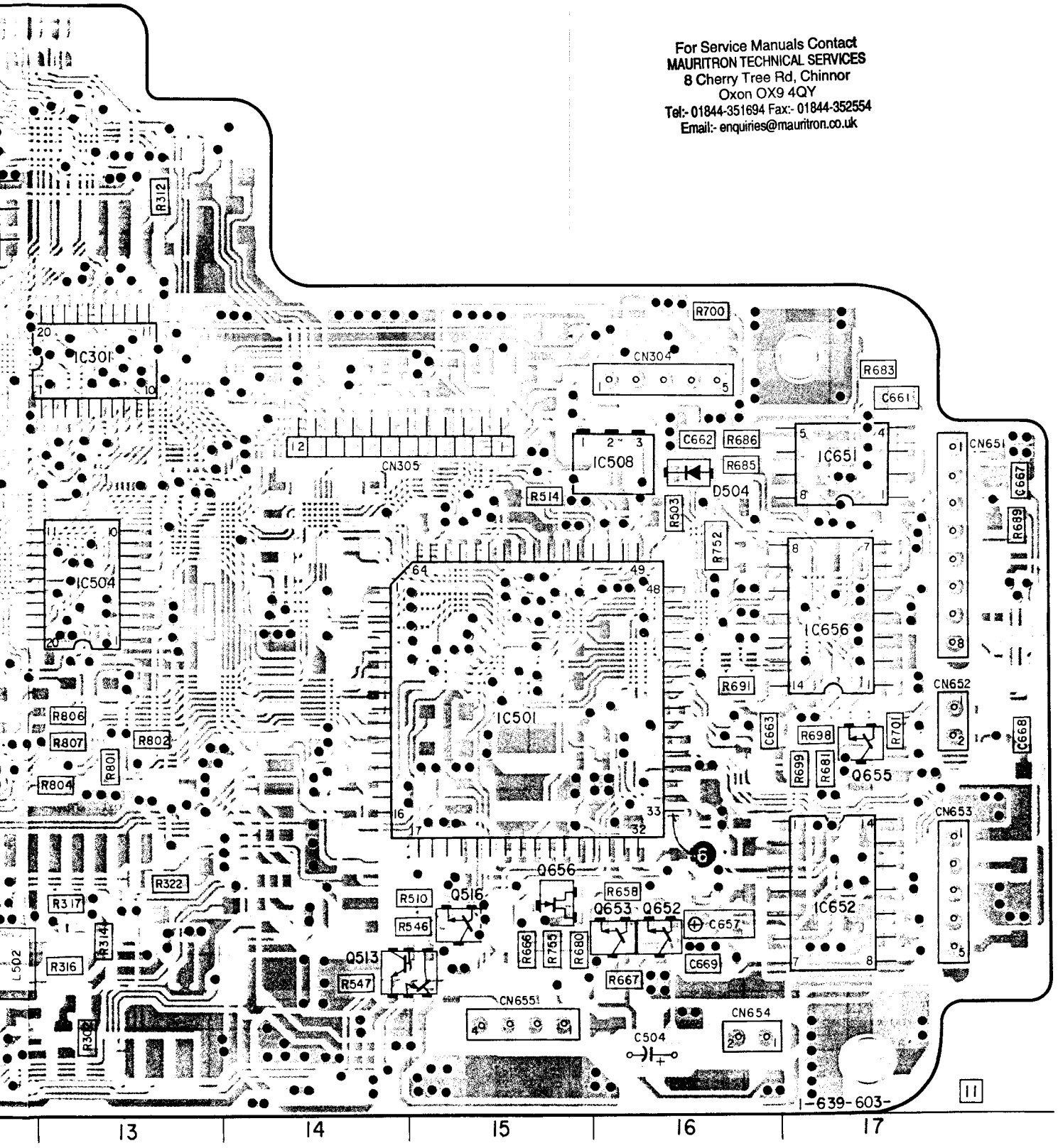

For Service Manuals Contact
MAURITRON TECHNICAL SERVICES
8 Cherry Tree Rd, Chinnor
Oxon OX9 4QY
Tel:- 01844-351694 Fax:- 01844-352554
Email:- enquiries@mauritron.co.uk

VC-96 (1/2) (CAMERA PROCESS) SCHEMATIC DIAGRAM

— Ref. No. VC-96 (1/2) BOARD: 6000 series —

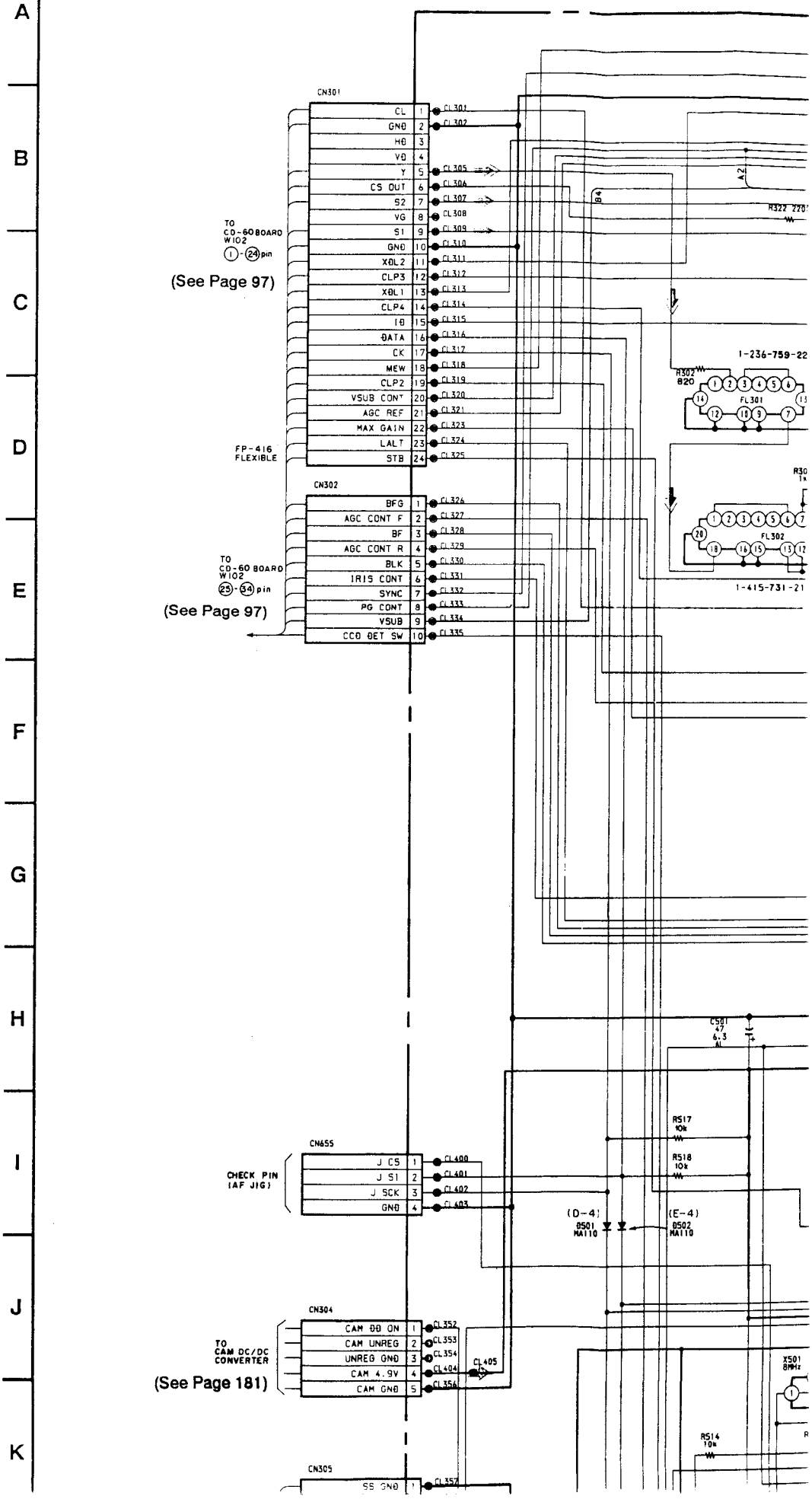

For Service Manuals Contact
MAURITRON TECHNICAL SERVICES
8 Cherry Tree Rd, Chinnor
Oxon OX9 4QY
Tel:- 01844-351694 Fax:- 01844-352554
Email:- enquiries@mauritron.co.uk

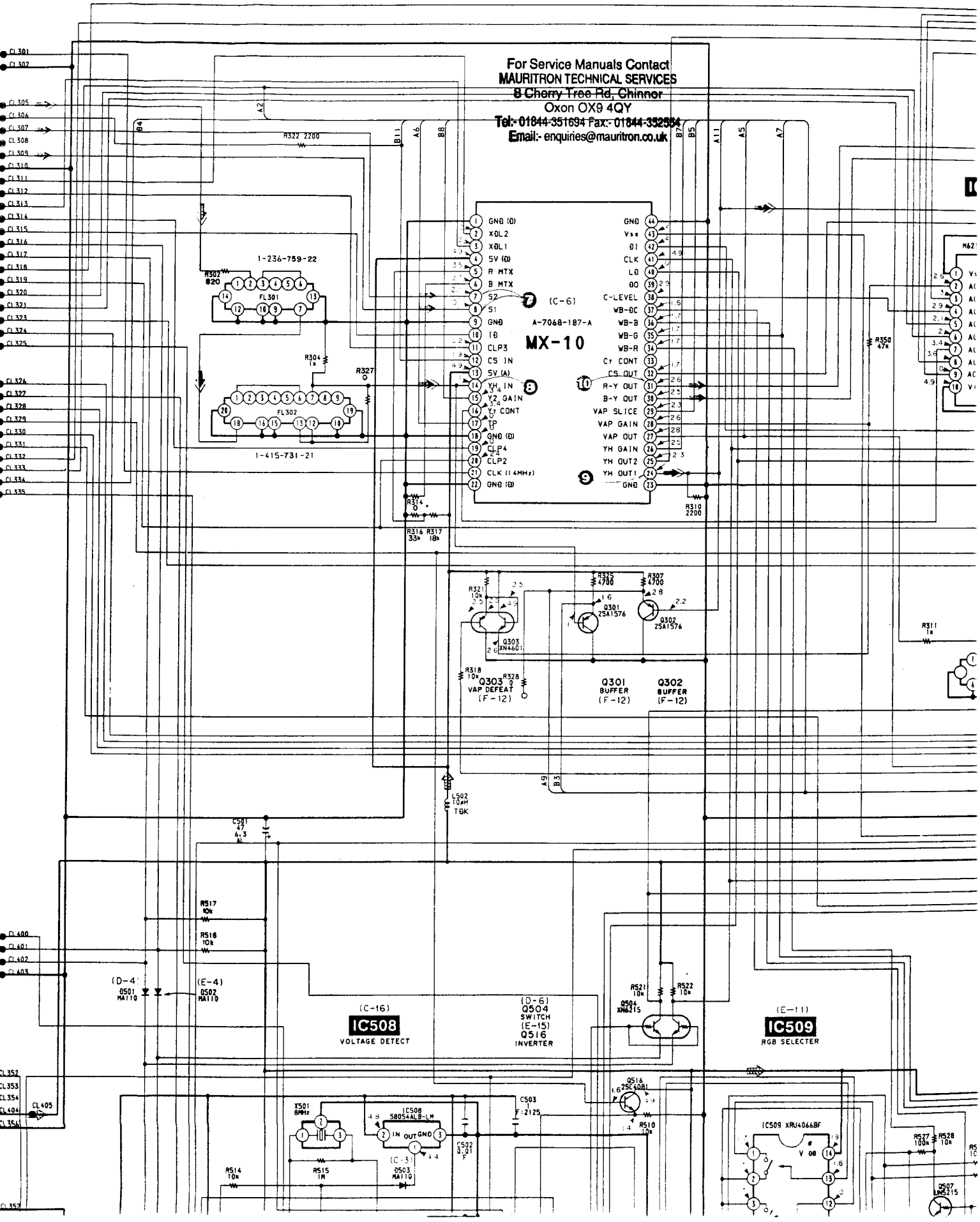

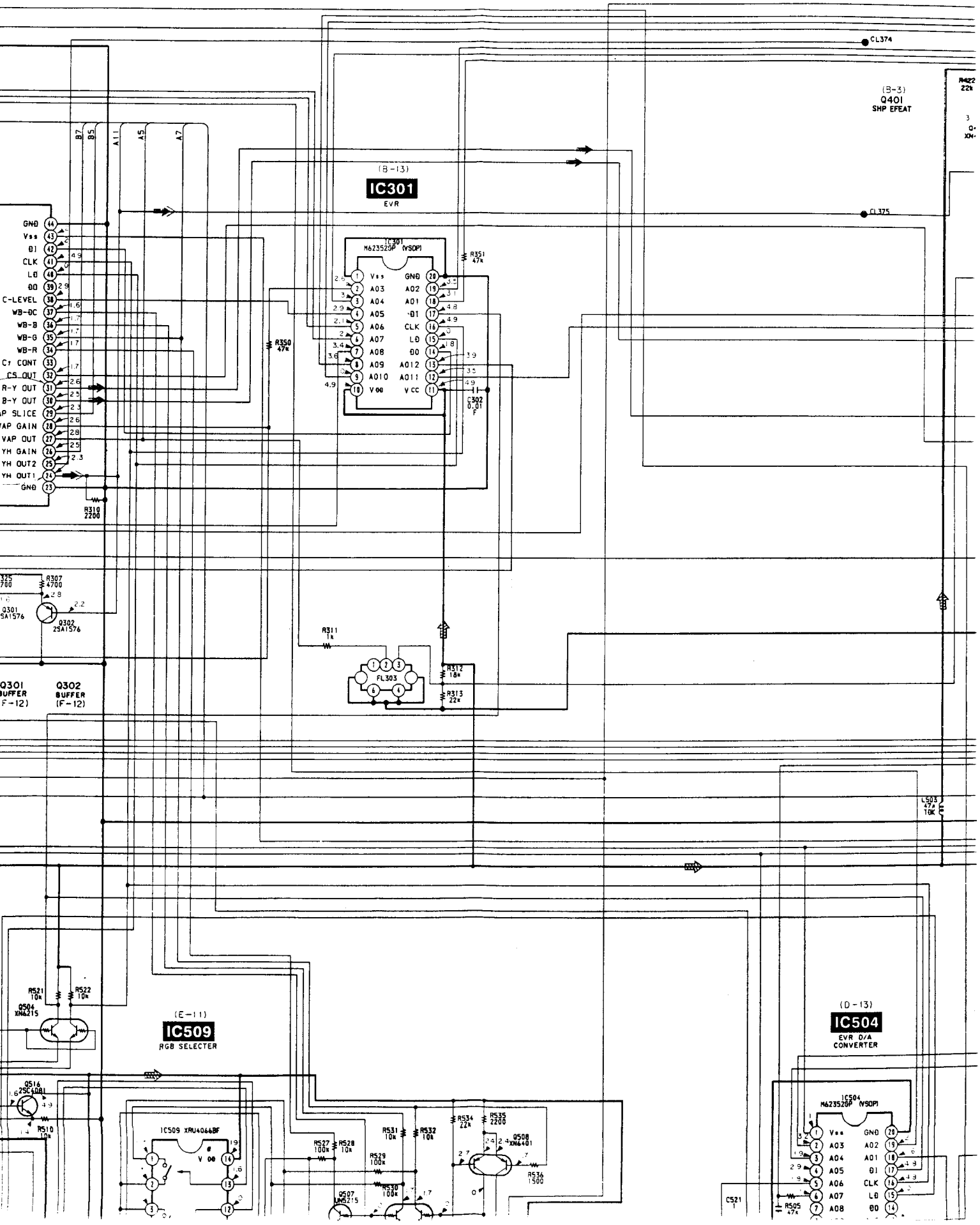
(B-13)
IC301
EVR
IC301
M62352GP (VSOP)
Vss
A03
A04
A05
A06
A07
A08
A09
A010
VDD
GND
A02
A01
01
CLK
L0
00
A012
A011
VCC
R351 47k
R350 47k
C302 0.01 F
CL374
CL375
(B-3)
Q401
SHP EFEAT
R422 22k
GND
Vss
01
CLK
L0
00
C-LEVEL
WB-DC
WB-B
WB-G
WB-R
CONT
CS OUT
R-Y OUT
B-Y OUT
SLICE
VAP GAIN
VAP OUT
YH GAIN
YH OUT2
YH OUT1
GND
R310 220Ω
R307 4700
Q301 2SA1576
Q302 2SA1576
Q301 BUFFER (F-12)
Q302 BUFFER (F-12)
R311 1k
FL303
R312 18k
R313 22k
LS03 47k 10K
(E-11)
IC509
RGB SELECTER
R521 10k
R522 10k
Q504 XN4215
Q516 2SC4081
R510 10k
IC509 XRU4066BF
VDD
R527 100k
R528 10k
R529 100k
R530 100k
R531 10k
R532 10k
R534 22k
R535 2200
Q508 XN6401
R536 1500
Q507 UN5215
(D-13)
IC504
EVR D/A CONVERTER
IC504
M62352GP (VSOP)
C521
R505 47k

For Service Manuals Contact
MAURITRON TECHNICAL SERVICES
8 Cherry Tree Rd, Chinnor
Oxon OX9 4QY
Tel:- 01844-351694 Fax:- 01844-352554
Email:- enquiries@mauritron.co.uk

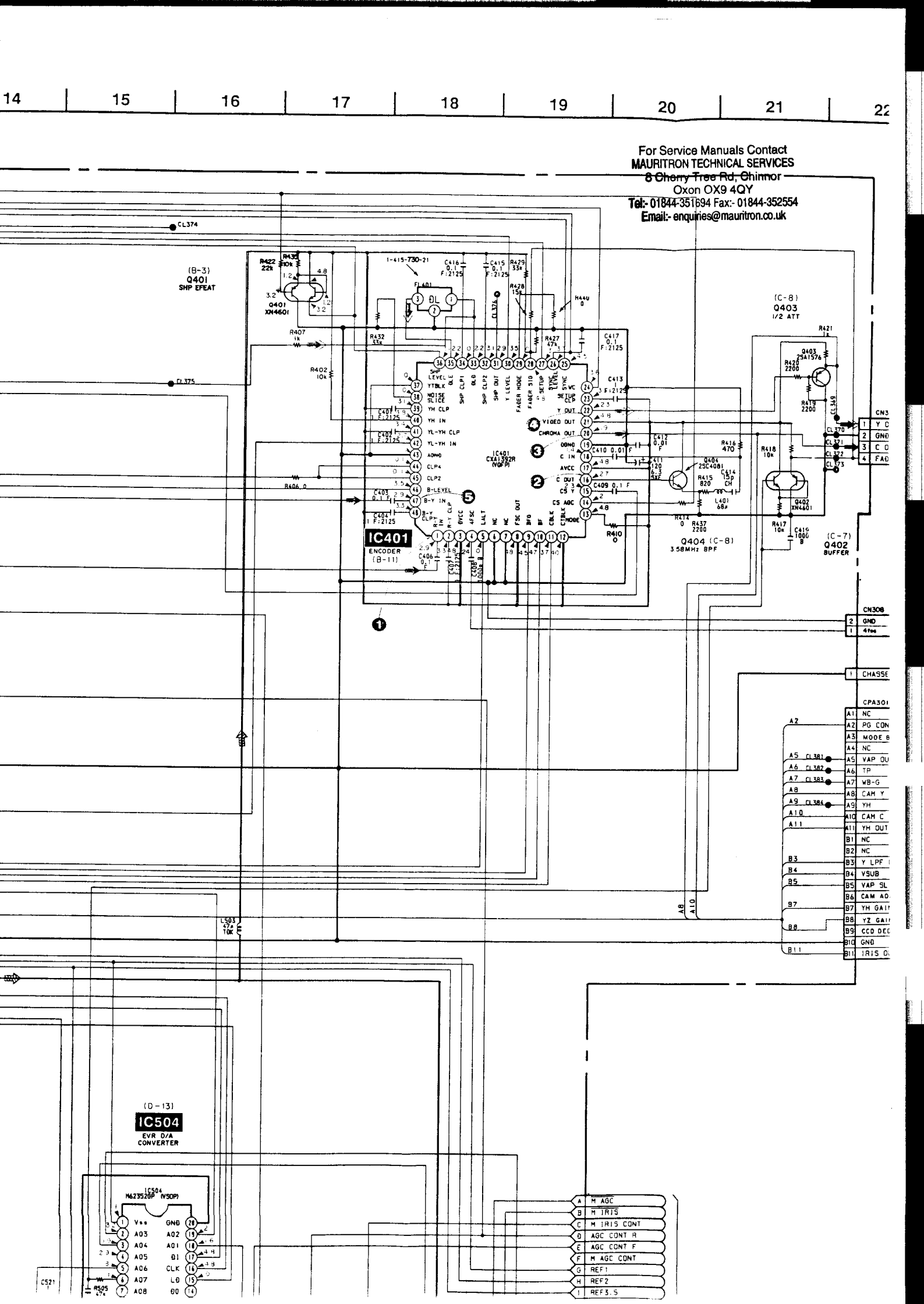

20 | 21 | 22 | 23 | 24 | 25 | 26 | 27

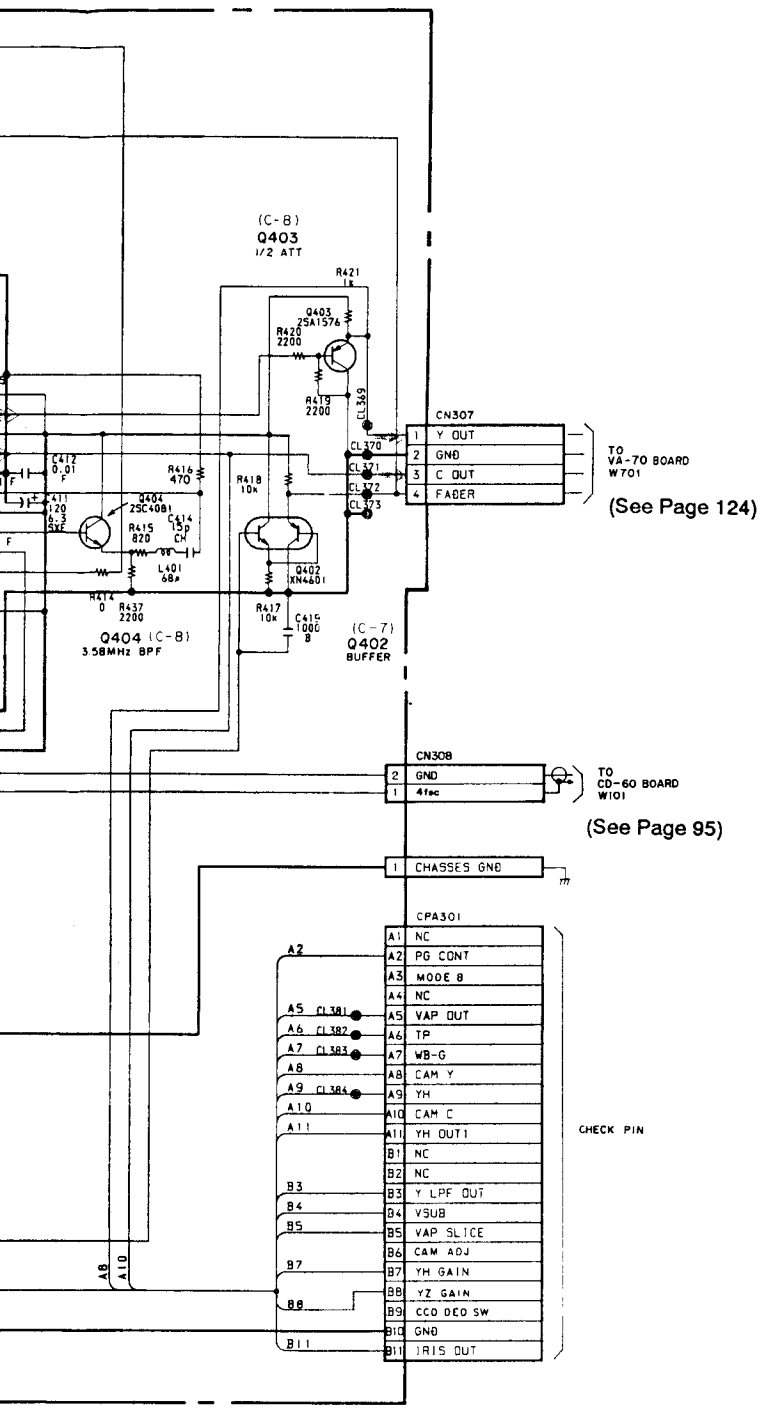

CONT
NT R
NT F
CONT

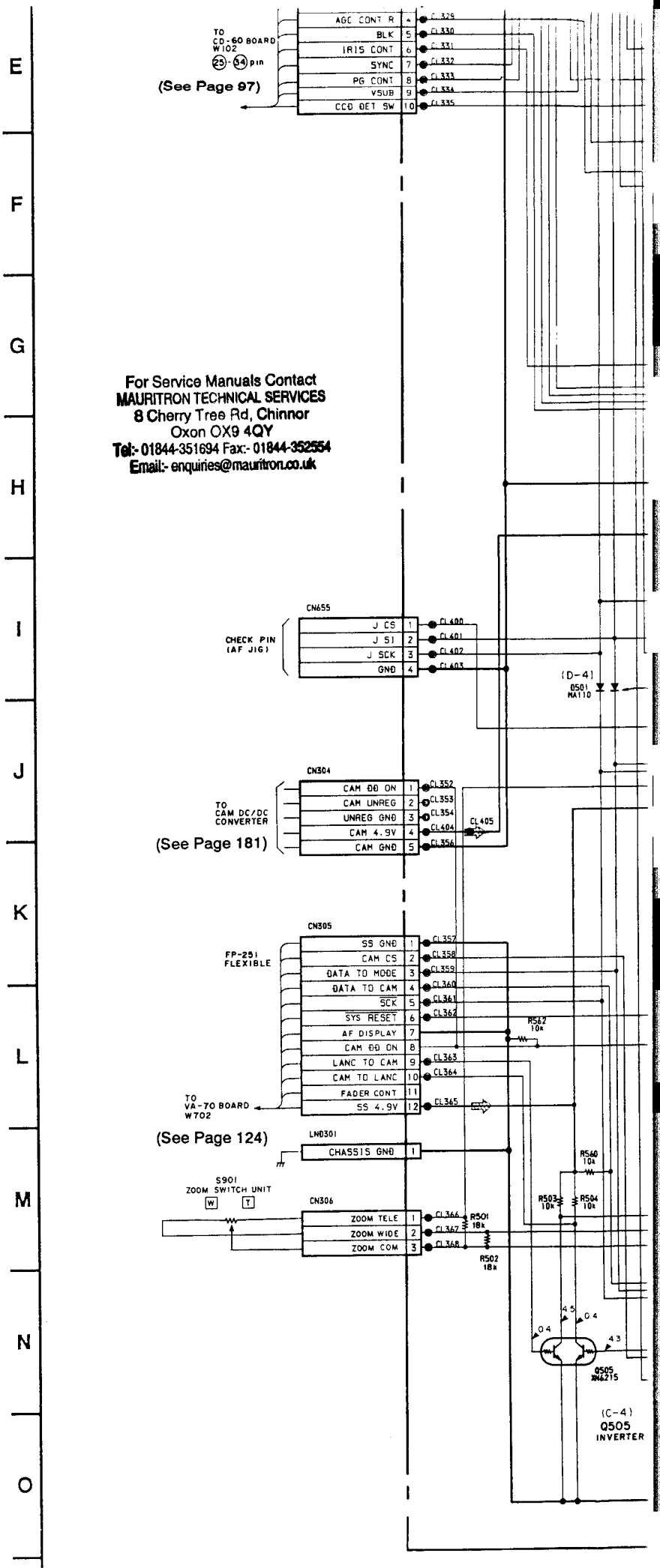

For Service Manuals Contact
MAURITRON TECHNICAL SERVICES
8 Cherry Tree Rd, Chinnor
Oxon OX9 4QY
Tel:- 01844-351694 Fax:- 01844-352554
Email:- enquiries@mauritron.co.uk

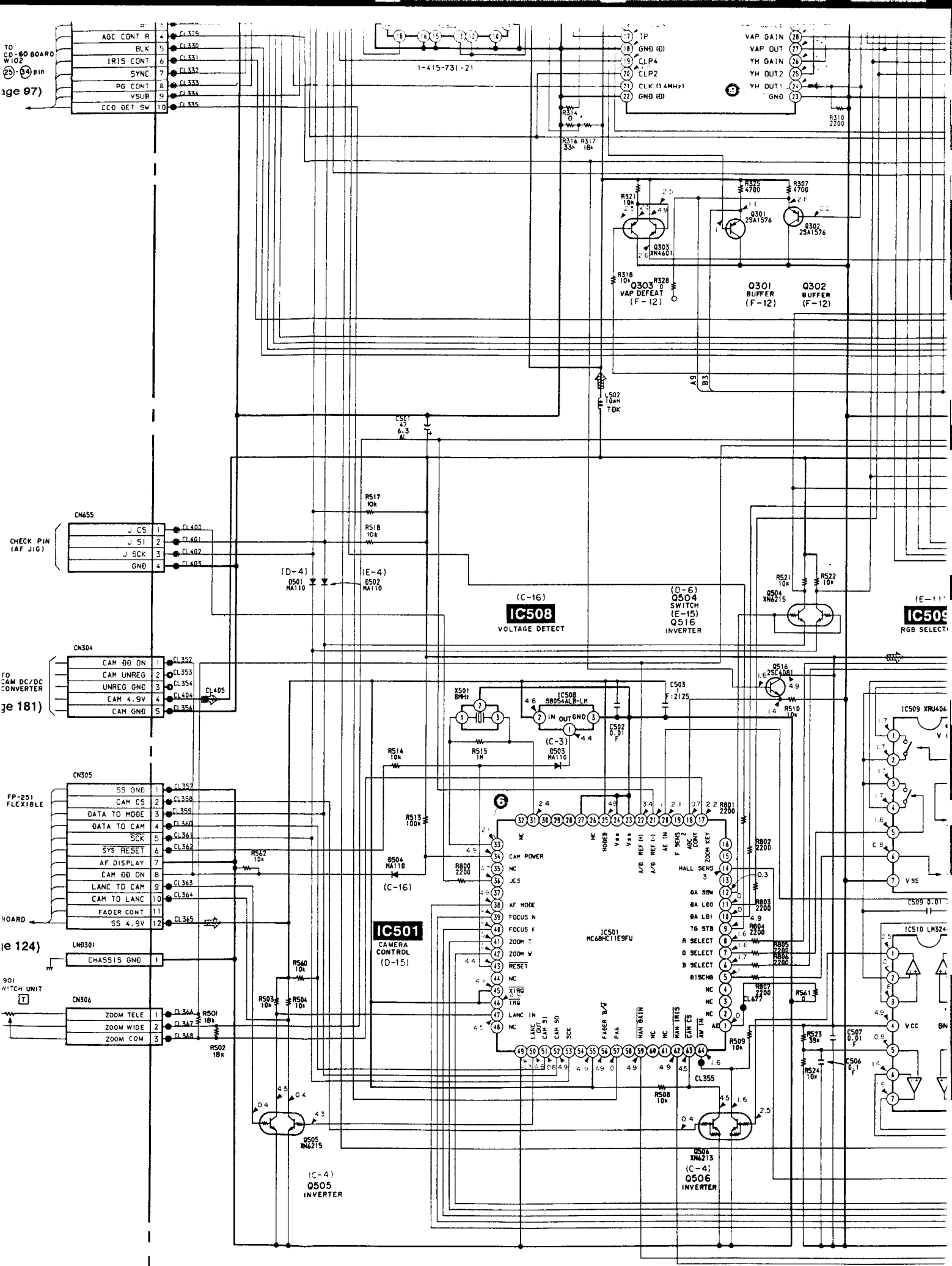

TO CD-60 BOARD W102
AGC CONT R
BLK
IRIS CONT
SYNC
PG CONT
VSUB
CCD DET SW
1-415-731-21
TP
GND (D)
CLP4
CLP2
CLK (14MHz)
GND (D)
VAP GAIN
VAP OUT
YH GAIN
YH OUT2
YH OUT1
GND
Q303 VAP DEFEAT (F-12)
Q301 BUFFER (F-12)
Q302 BUFFER (F-12)
CN655
CHECK PIN (AF JIG)
J CS
J SI
J SCK
GND
CN304
TO CAM DC/DC CONVERTER
CAM DD ON
CAM UNREG
UNREG GND
CAM 4.9V
CAM GND
CN305
FP-251 FLEXIBLE
SS GND
CAM CS
DATA TO MODE
DATA TO CAM
SCK
SYS RESET
AF DISPLAY
CAM DD ON
LANC TO CAM
CAM TO LANC
FADER CONT
SS 4.9V
LND301
CHASSIS GND
CN306
ZOOM TELE
ZOOM WIDE
ZOOM COM
(C-16)
IC508
VOLTAGE DETECT
(D-6)
Q504
SWITCH
(E-15)
Q516
INVERTER
IC509
RGB SELECT
IC501
CAMERA CONTROL
(D-15)
IC501 MC68HC11E9FU
CAM POWER
NC
JCS
AF MODE
FOCUS N
FOCUS F
ZOOM T
ZOOM W
RESET
NC
XIRQ
IRQ
LANC IN
NC
HALL SENS
DA SSW
DA LDD
DA LDI
TG STB
R SELECT
G SELECT
B SELECT
DISCHG
NC
NC
NC
AE
Q505 XN6215
(C-4)
Q505
INVERTER
Q506 XN6213
(C-4)
Q506
INVERTER
IC509 XRU406
IC510 LM324
VSS
VCC

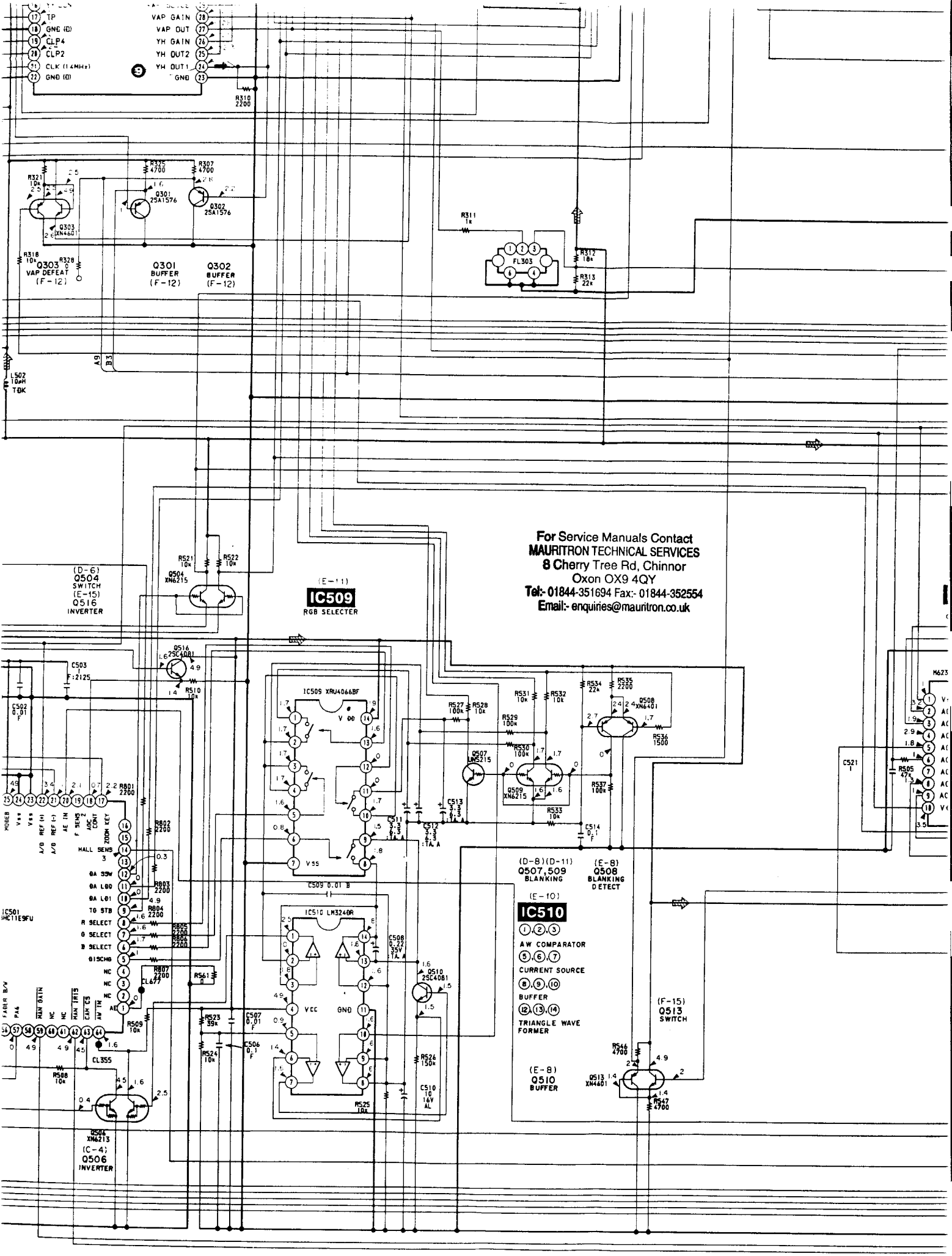

For Service Manuals Contact
MAURITRON TECHNICAL SERVICES
8 Cherry Tree Rd, Chinnor
Oxon OX9 4QY
Tel:- 01844-351694 Fax:- 01844-352554
Email:- enquiries@mauritron.co.uk

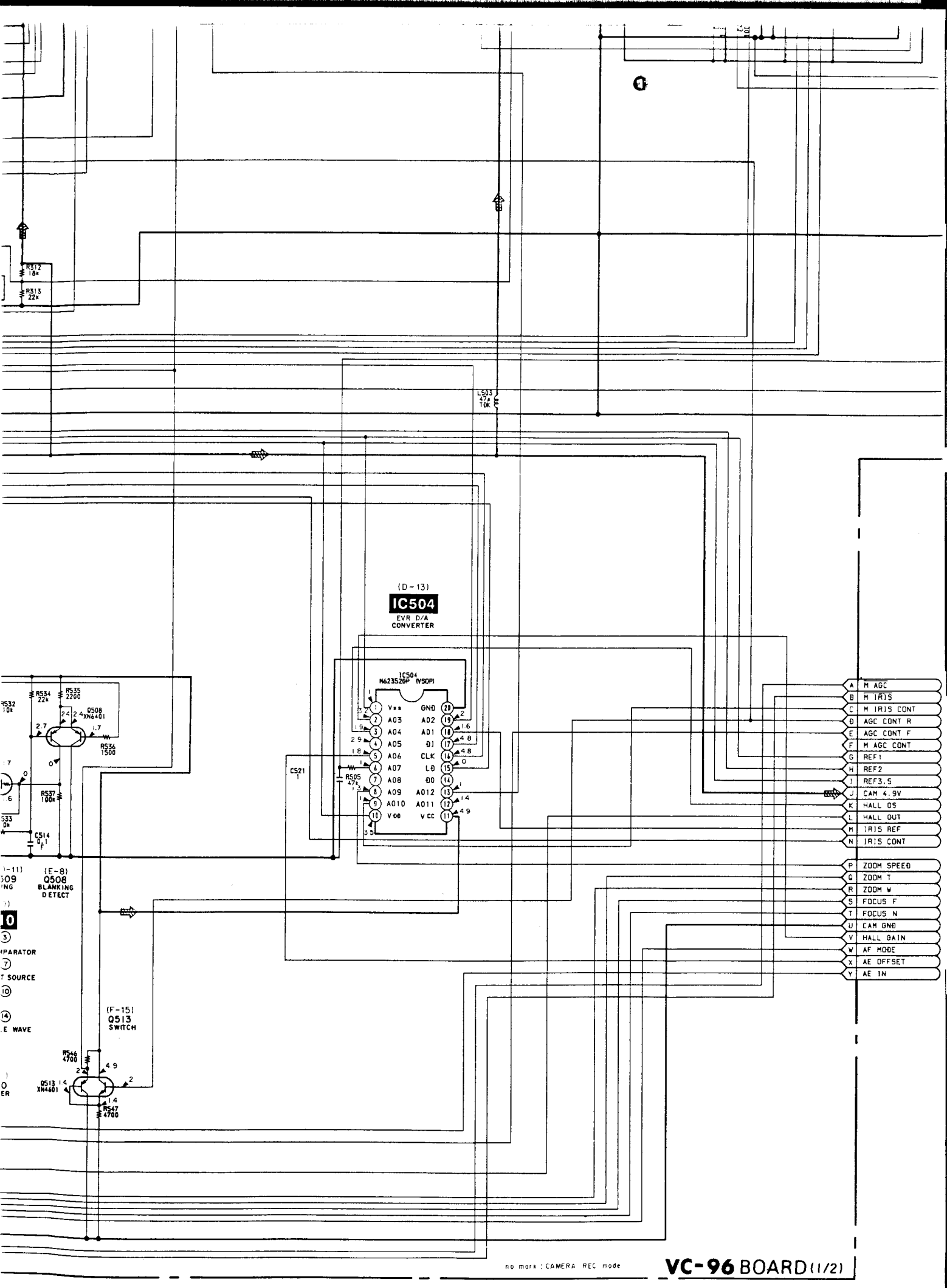

VC-96 BOARD (1/2)

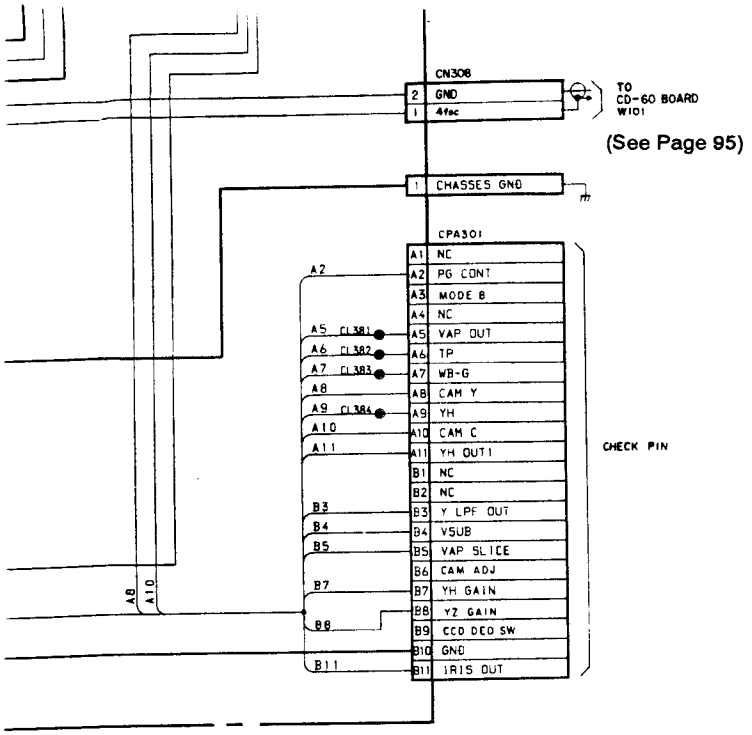

AGC
IRIS
IRIS CONT
C CONT R
C CONT F
AGC CONT
F1
F2
F3.5
M 4.9V
LL OS
LL OUT
IS REF
IS CONT

OM SPEED
OM T
OM W
OCUS F
OCUS N
AM GND
ALL GAIN
MODE
OFFSET
IN

TO VC-96 BOARD (2/2)

(See Page 111)

For Service Manuals Contact
MAURITRON TECHNICAL SERVICES
8 Cherry Tree Rd, Chinnor
Oxon OX9 4QY
Tel:- 01844-351694 Fax:- 01844-352554
Email:- enquiries@mauritron.co.uk

• SIGNAL PATH

	VIDEO SIGNAL			AUDIO SIGNAL
	CHROMA	Y	Y/CHROMA/DATA	
REC	➡	➡		
PB				

VC-96, AF (CAMERA LENS DRIVE) PRINTED WIRING BOARDS

— Ref. No. VC-96 (2/2) BOARD: 6000 series —

AF board is replaced as a block, so that the PRINTED WIRING BOARD of it is omitted.

* A-7062-776-A VC-96P BOARD, COMPLETE
****
(Ref. No 6,000 Series)

< DIODE >

D501	8-719-404-46	DIODE	MA110
D502	8-719-404-46	DIODE	MA110
D503	8-719-404-46	DIODE	MA110
D504	8-719-404-46	DIODE	MA110
D651	8-719-976-90	DIODE	DTZ4.3A

< IC >

IC301	8-759-635-27	IC	M62352GP
IC401	8-752-038-XX	IC	CXA1392R
IC501	8-759-038-85	IC	MC68HC11E9FU-SC400226
IC504	8-759-635-27	IC	M62352GP
IC508	8-759-937-56	IC	S-8054ALB-LM
IC509	8-759-509-05	IC	XRU4066BF
IC510	8-759-998-96	IC	LM324DR
IC651	8-759-981-82	IC	RC3414M
IC652	8-759-998-96	IC	LM324DR
IC653	8-759-500-11	IC	MM1036XFF
IC656	8-759-998-96	IC	LM324DR

< TRANSISTOR >

Q301	8-729-905-23	TRANSISTOR	2SA1576
Q302	8-729-905-23	TRANSISTOR	2SA1576
Q303	8-729-907-47	TRANSISTOR	IMZ1
Q401	8-729-907-47	TRANSISTOR	IMZ1
Q402	8-729-907-47	TRANSISTOR	IMZ1
Q403	8-729-905-23	TRANSISTOR	2SA1576
Q404	8-729-905-35	TRANSISTOR	2SC4081
Q504	8-729-925-39	TRANSISTOR	IMH8
Q505	8-729-925-39	TRANSISTOR	IMH8
Q506	8-729-925-77	TRANSISTOR	IMH6
Q507	8-729-420-50	TRANSISTOR	UN5215
Q508	8-729-402-78	TRANSISTOR	XN6401
Q509	8-729-925-39	TRANSISTOR	IMH8
Q510	8-729-905-35	TRANSISTOR	2SC4081
Q513	8-729-907-47	TRANSISTOR	IMZ1
Q516	8-729-905-35	TRANSISTOR	2SC4081
Q652	8-729-402-42	TRANSISTOR	UN5213
Q653	8-729-905-23	TRANSISTOR	2SA1576
Q654	8-729-106-60	TRANSISTOR	2SB1115A
Q655	8-729-905-35	TRANSISTOR	2SC4081
Q656	8-729-821-88	TRANSISTOR	2SK1332-3

VC-96 BOARD (COMPONENT

For Service Manuals Contact
MAURITRON TECHNICAL SERVICES
8 Cherry Tree Rd, Chinnor
Oxon OX9 4QY
Tel:- 01844-351694 Fax- 01844-352554
Email:- enquiries@mauritron.co.uk

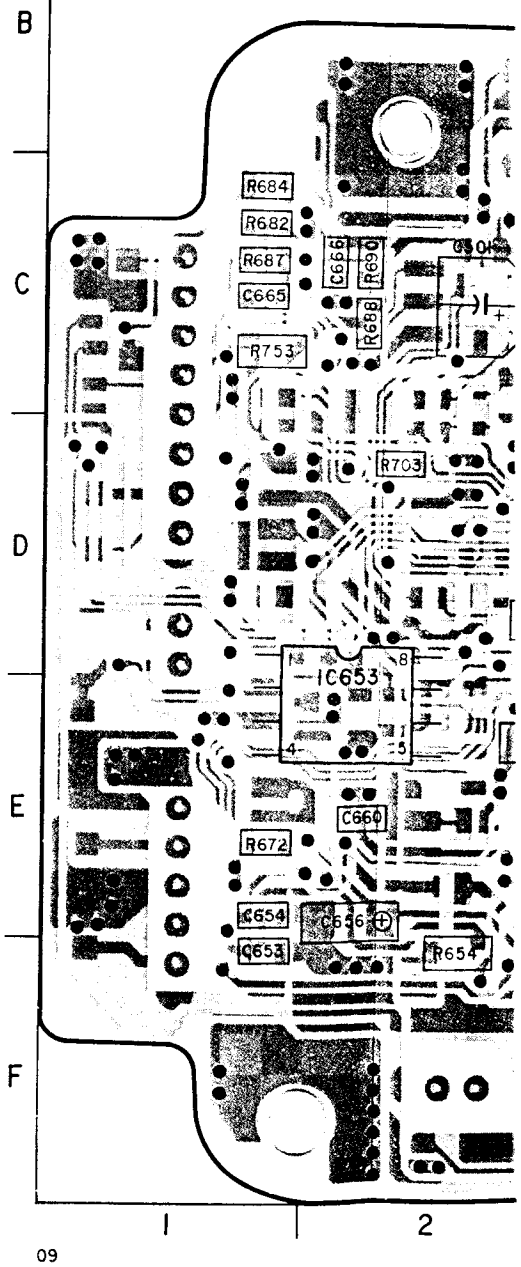

09

tted.

-96 BOARD (COMPONENT SIDE)

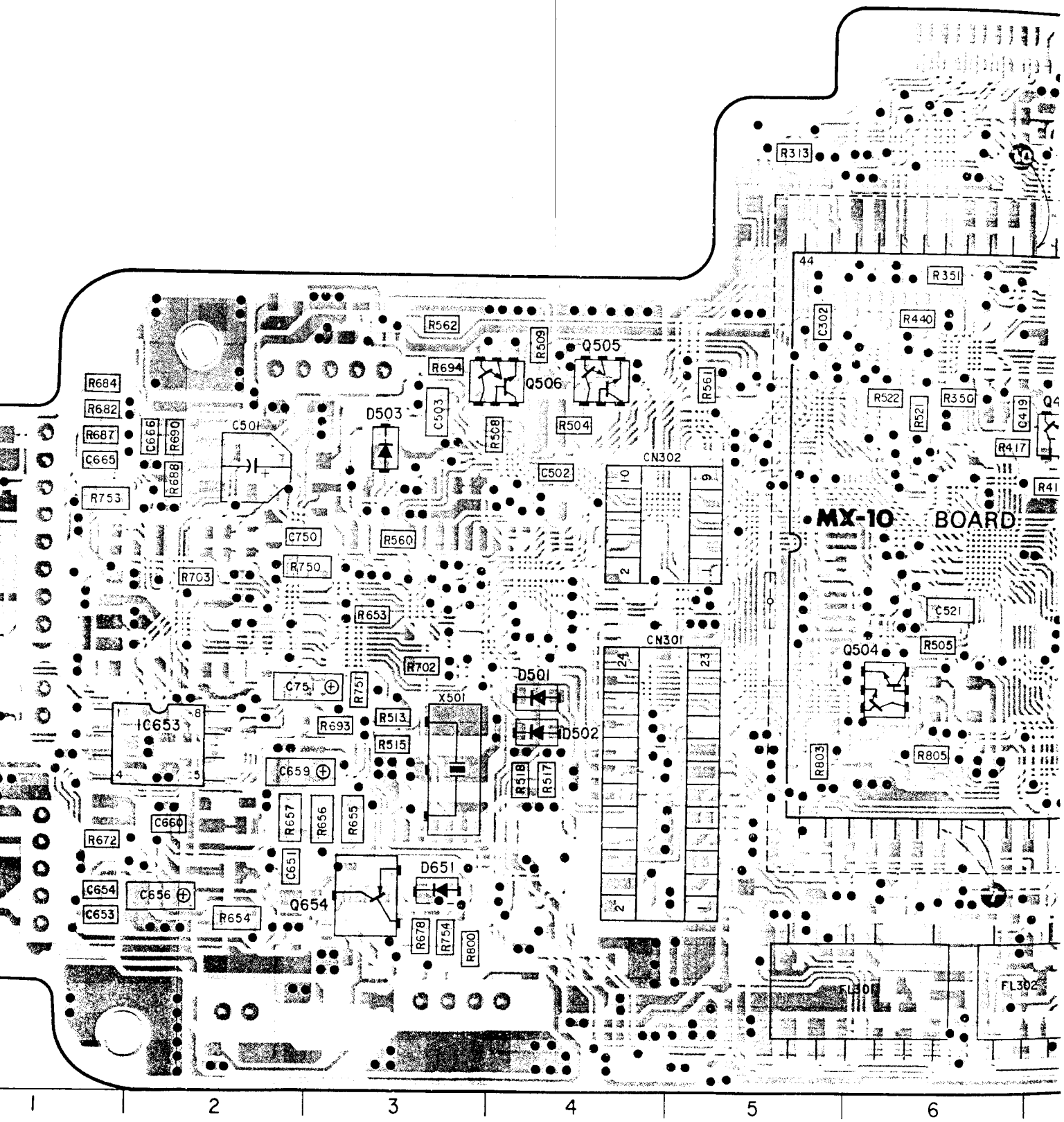

CAMERA CAMERA

For Service Manuals Contact
MAURITRON TECHNICAL SERVICES
8 Cherry Tree Rd, Chinnor
Oxon OX9 4QY
Tel:- 01844-351694 Fax:- 01844-352554
Email:- enquiries@mauritron.co.uk

VC-96 BOARD (CONDUCTOR SIDE)

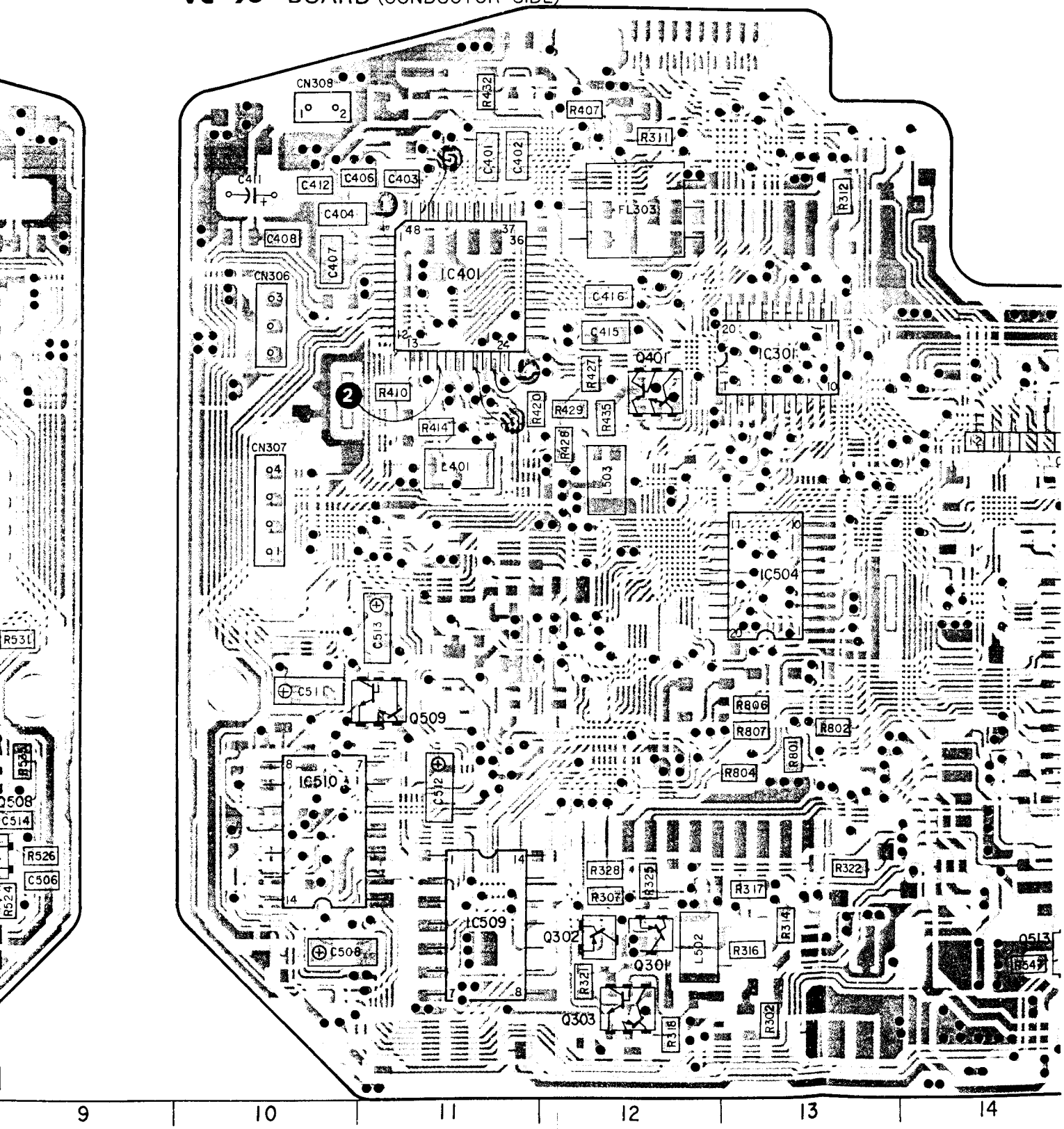

For Service Manuals Contact
MAURITRON TECHNICAL SERVICES
8 Cherry Tree Rd, Chinnor
Oxon OX9 4QY
Tel:- 01844-351694 Fax:- 01844-352554
Email:- enquiries@mauritron.co.uk

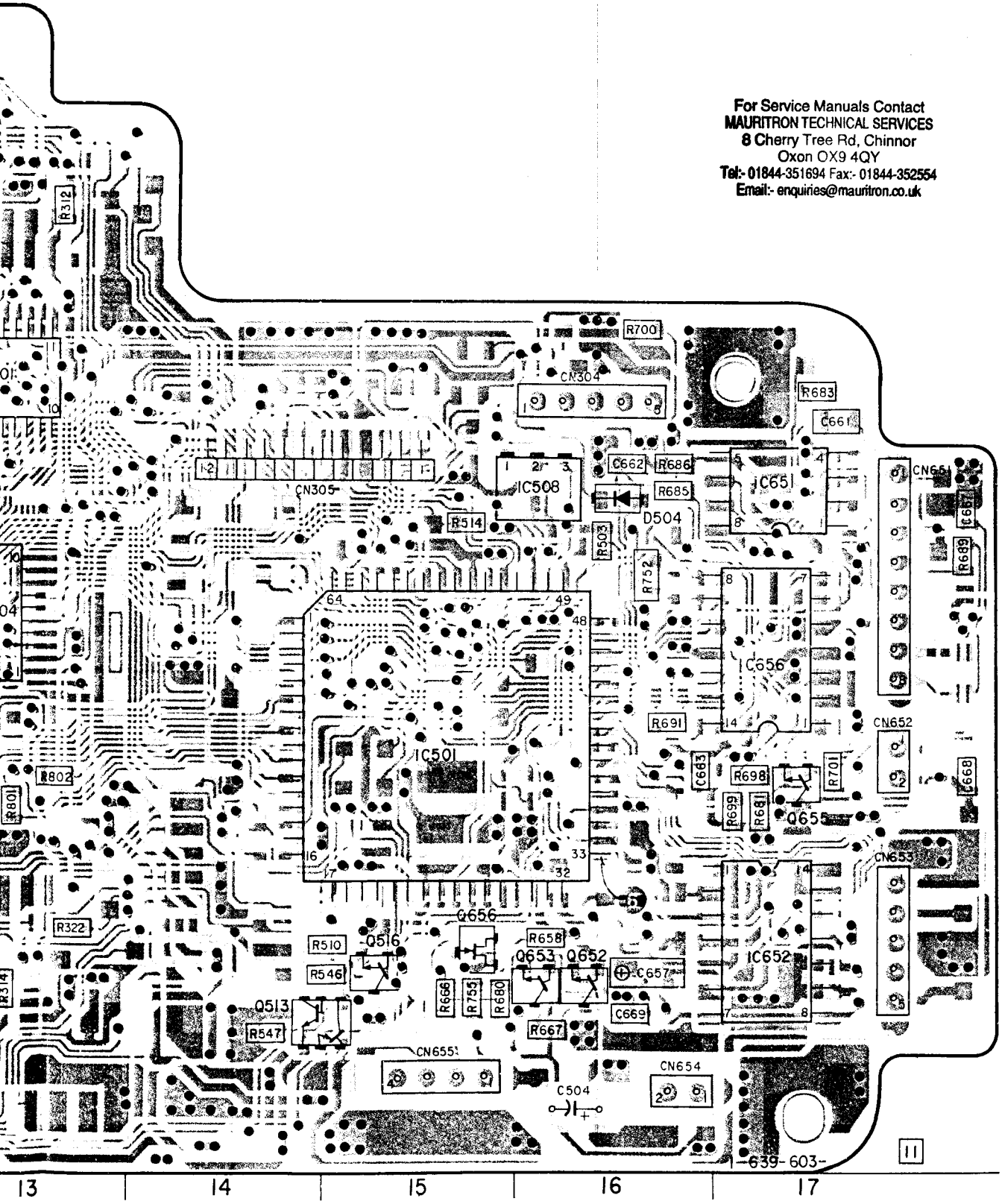

— Ref. No. VC-96 (2/2) BOARD: 6000 series —

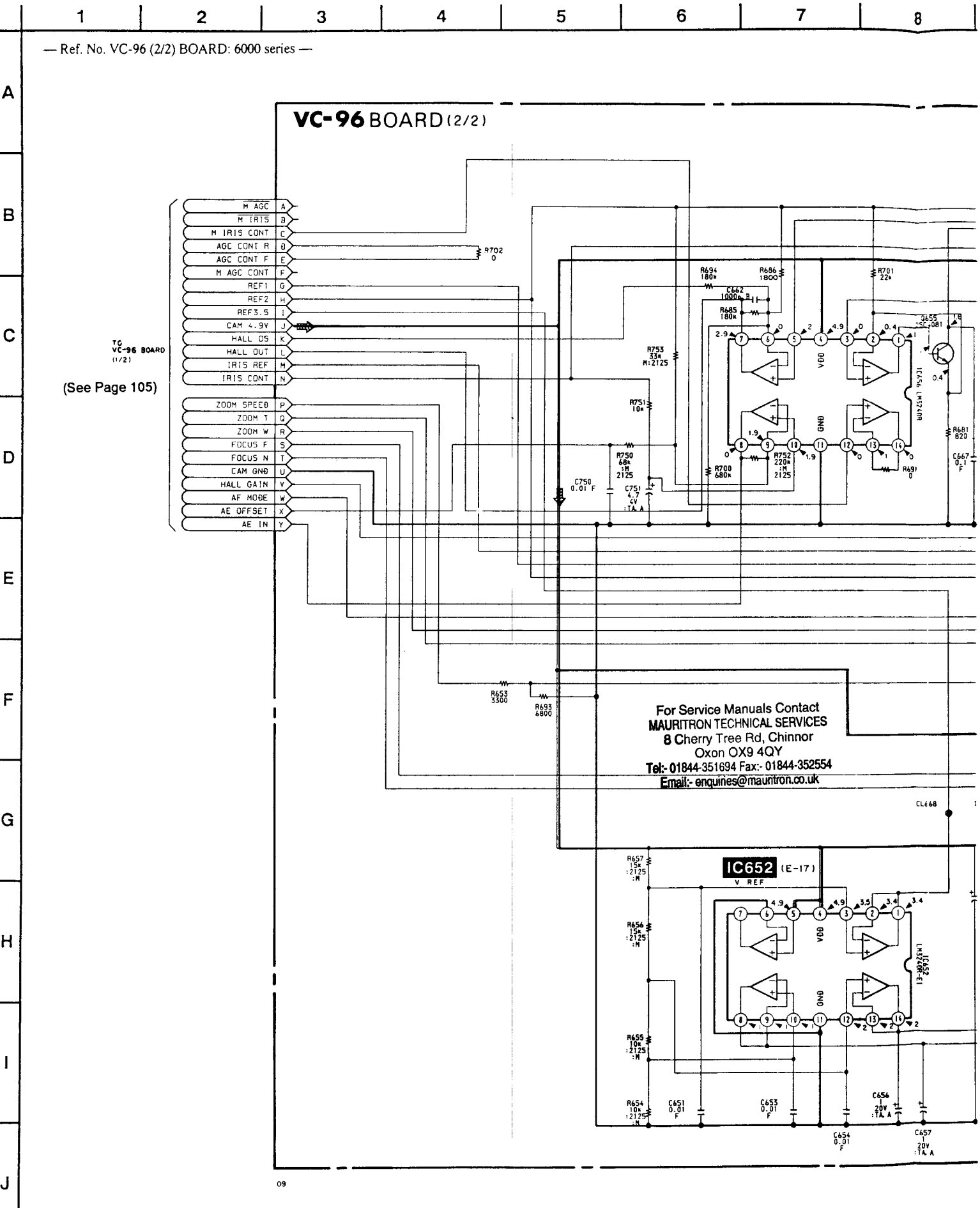

For Service Manuals Contact
MAURITRON TECHNICAL SERVICES
8 Cherry Tree Rd, Chinnor
Oxon OX9 4QY
Tel:- 01844-351694 Fax:- 01844-352554
Email:- enquiries@maurtron.co.uk

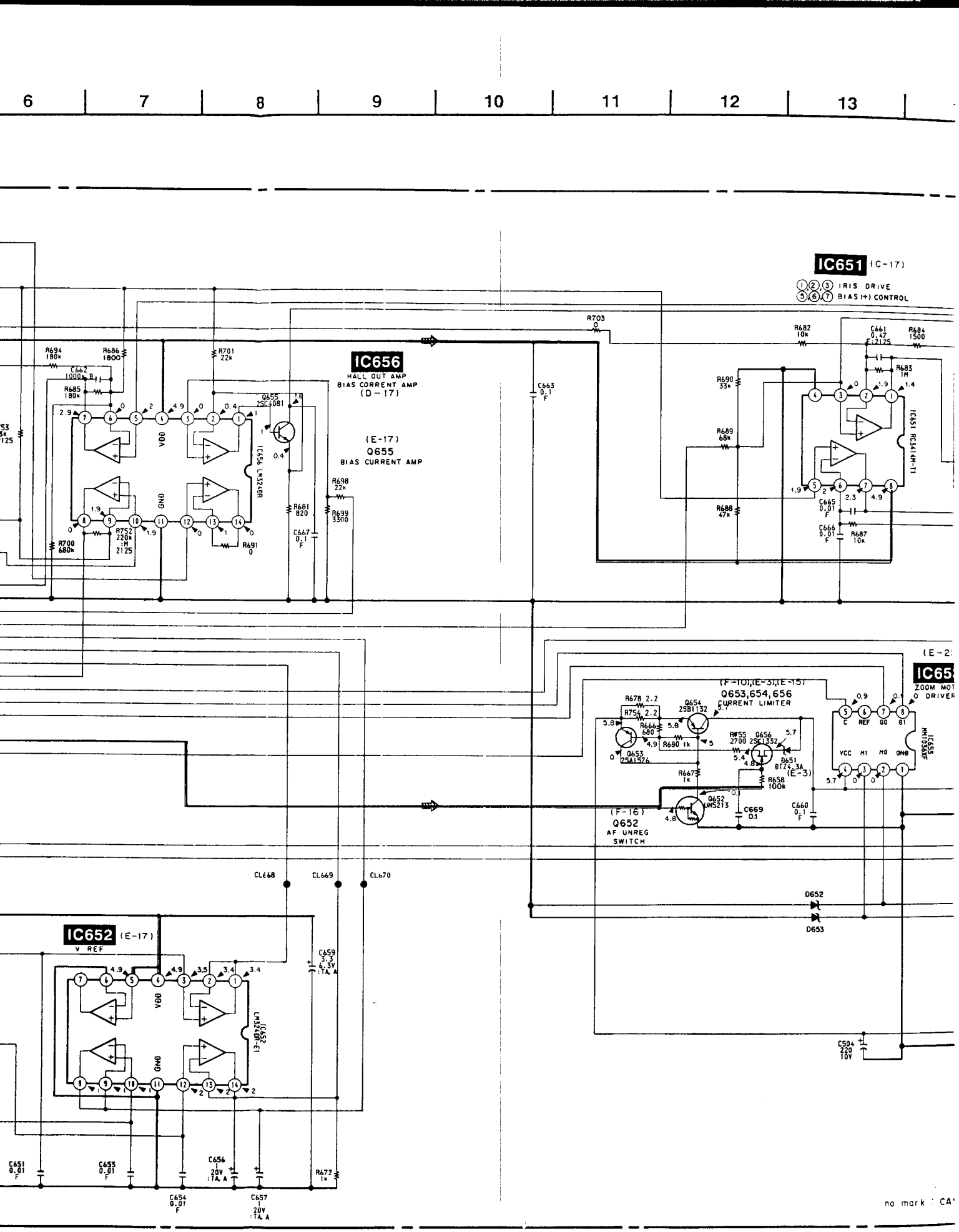
6
7
8
9
10
11
12
13
IC651 (C-17)
IRIS DRIVE
BIAS (+) CONTROL
IC656
HALL OUT AMP
BIAS CORRENT AMP
(D-17)
(E-17)
Q655
BIAS CURRENT AMP
IC656 LM324DR
IC651 RC3414M-T1
(F-10),(E-3),(E-15)
Q653,654,656
CURRENT LIMITER
(F-16)
Q652
AF UNREG
SWITCH
IC653 MM1036XF
IC652 (E-17)
V REF
IC652 LM324DR-E1
CL668
CL669
CL670
D652
D653
no mark : CA

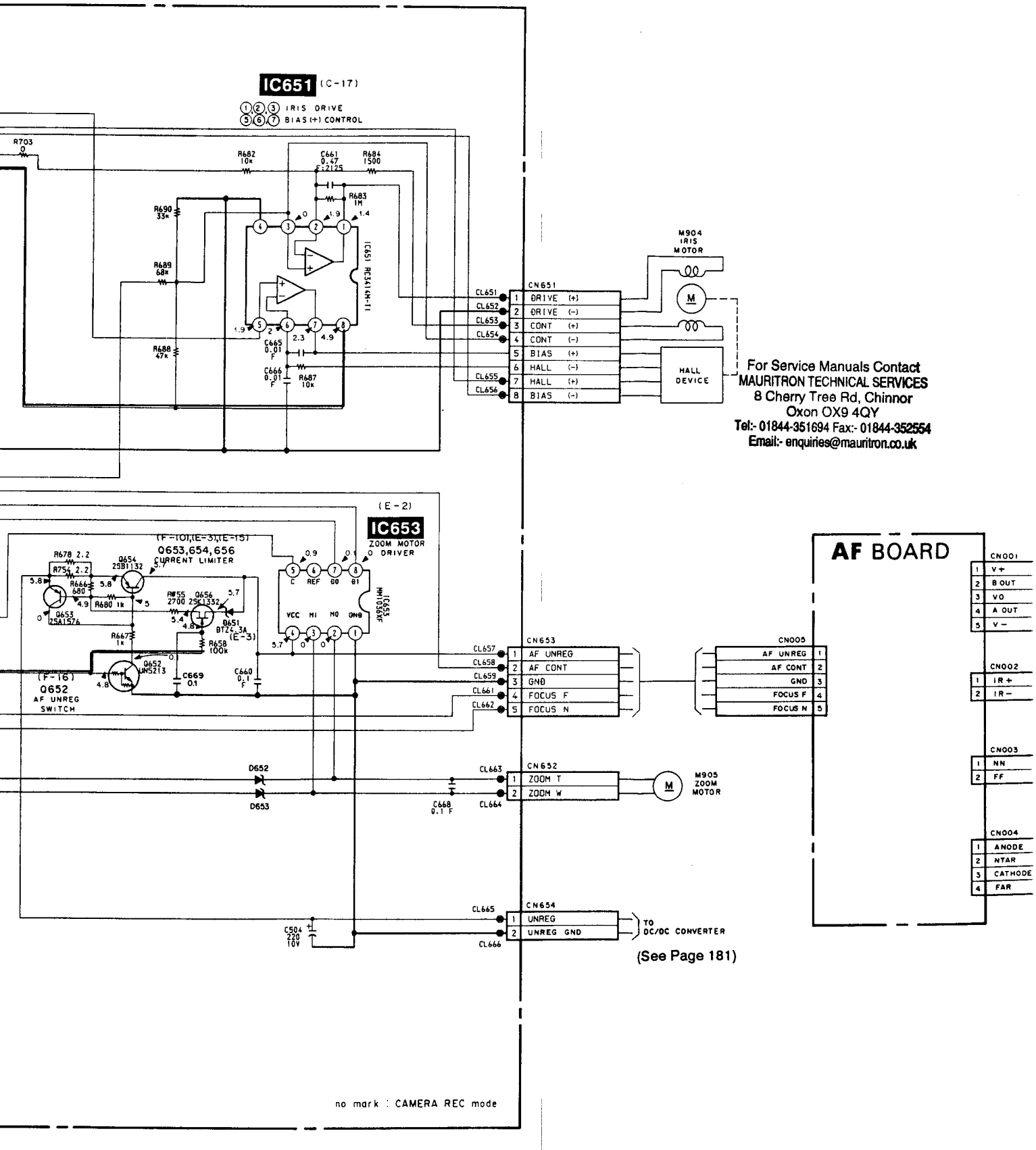

For Service Manuals Contact
MAURITRON TECHNICAL SERVICES
8 Cherry Tree Rd, Chinnor
Oxon OX9 4QY
Tel:- 01844-351694 Fax:- 01844-352554
Email:- enquiries@mauritron.co.uk

(See Page 181)

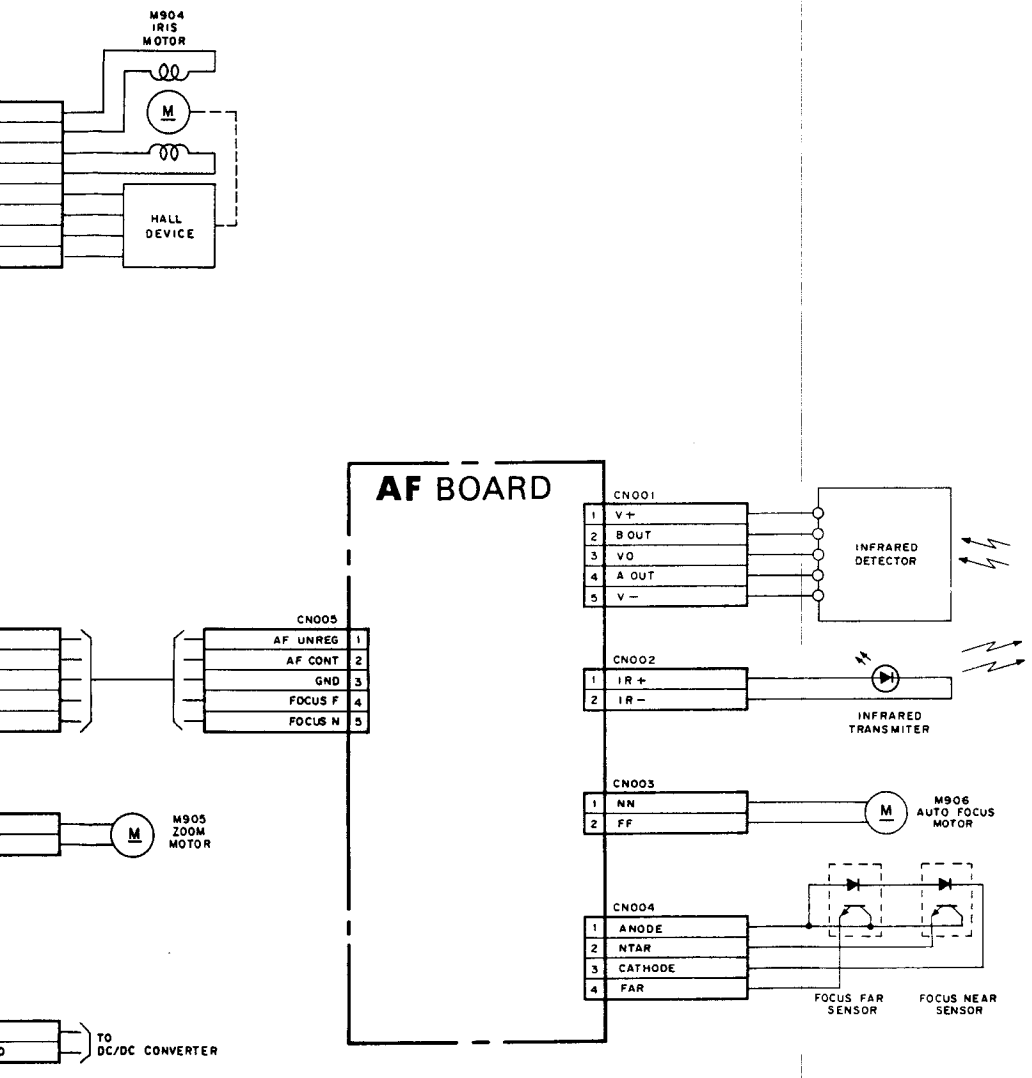
M904
IRIS
MOTOR
M
HALL
DEVICE
AF BOARD
CN001
1 V+
2 B OUT
3 VO
4 A OUT
5 V−
INFRARED
DETECTOR
CN005
AF UNREG 1
AF CONT 2
GND 3
FOCUS F 4
FOCUS N 5
CN002
1 IR+
2 IR−
INFRARED
TRANSMITER
CN003
1 NN
2 FF
M906
AUTO FOCUS
MOTOR
M905
ZOOM
MOTOR
CN004
1 ANODE
2 NTAR
3 CATHODE
4 FAR
FOCUS FAR
SENSOR
FOCUS NEAR
SENSOR
TO
DC/DC CONVERTER

(See Page 181)

For Service Manuals Contact
MAURITRON TECHNICAL SERVICES
8 Cherry Tree Rd, Chinnor
Oxon OX9 4QY
Tel:- 01844-351694 Fax:- 01844-352554
Email:- enquiries@mauritron.co.uk

For Service Manuals Contact
MAURITRON TECHNICAL SERVICES
8 Cherry Tree Rd, Chinnor
Oxon OX9 4QY
Tel:- 01844-351694 Fax:- 01844-352554
Email:- enquiries@mauritron.co.uk

CT-40 BOARD

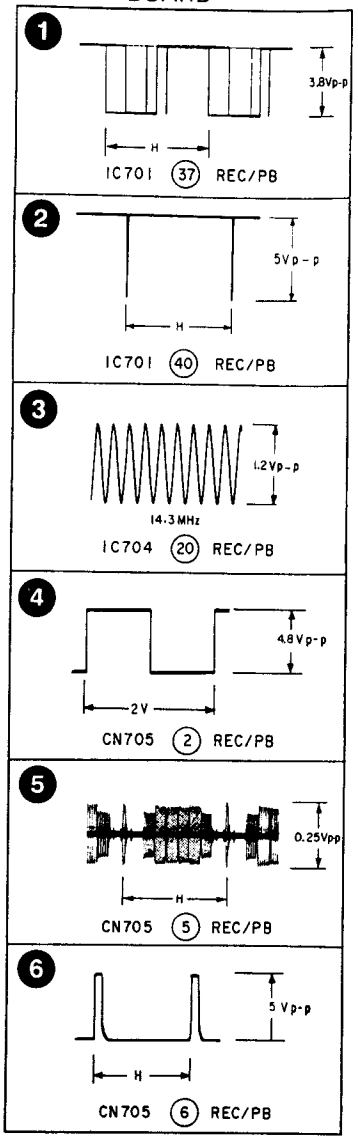

T-40 BOARD

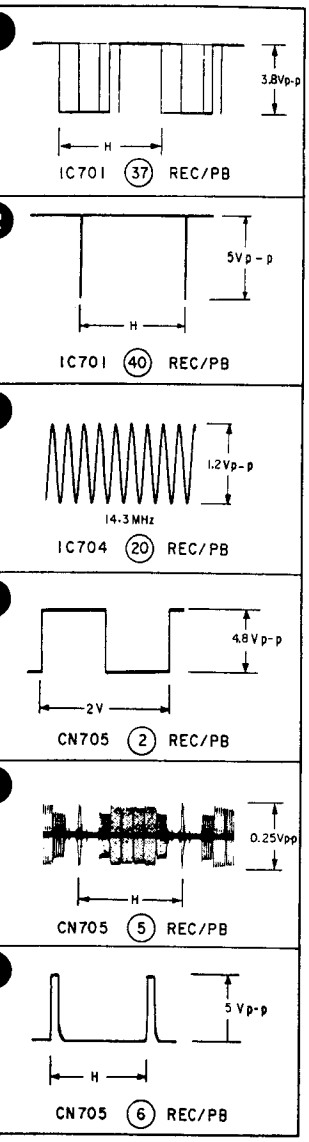

* A-7062-779-A CT-40P BOARD, COMPLETE

****

(Ref. No 1,000 Series)

< DIODE >

D901	8-719-949-46	DIODE	1T32
D903	8-719-404-46	DIODE	MA110
D904	8-719-404-46	DIODE	MA110
D905	8-719-404-46	DIODE	MA110
D906	8-719-404-46	DIODE	MA110

< IC >

IC701	8-759-998-30	IC	CF79028PG
IC702	8-759-515-28	IC	MS6264CLL-15FC
IC703	8-752-039-49	IC	CXA1393AN
IC704	8-759-634-47	IC	M51285BGP
IC707	8-759-710-29	IC	NJM2235M
IC708	8-759-710-09	IC	NJM2233AM
IC709	8-759-710-09	IC	NJM2233AM
IC713	8-759-234-20	IC	TC7S08F
IC901	8-759-970-80	IC	MB673198U
IC902	8-759-153-41	IC	uPD6451AGT-611

< TRANSISTOR >

Q701	8-729-925-91	TRANSISTOR	DTC115EU
Q702	8-729-907-03	TRANSISTOR	FMG5
Q703	8-729-905-18	TRANSISTOR	DTC144EU
Q704	8-729-905-35	TRANSISTOR	2SC4081
Q705	8-729-905-24	TRANSISTOR	2SA1576
Q706	8-729-905-18	TRANSISTOR	DTC144EU
Q707	8-729-905-35	TRANSISTOR	2SC4081
Q708	8-729-905-15	TRANSISTOR	DTC144WU
Q709	8-729-905-35	TRANSISTOR	2SC4081
Q710	8-729-905-35	TRANSISTOR	2SC4081
Q720	8-729-905-18	TRANSISTOR	DTC144EU
Q726	8-729-905-23	TRANSISTOR	2SA1576
Q727	8-729-905-35	TRANSISTOR	2SC4081
Q728	8-729-905-35	TRANSISTOR	2SC4081
Q729	8-729-905-18	TRANSISTOR	DTC144EU
Q730	8-729-905-12	TRANSISTOR	DTA144EU
Q800	8-729-905-18	TRANSISTOR	DTC144EU
Q801	8-729-905-23	TRANSISTOR	2SA1576

CT-40 BOARD (COMPONE

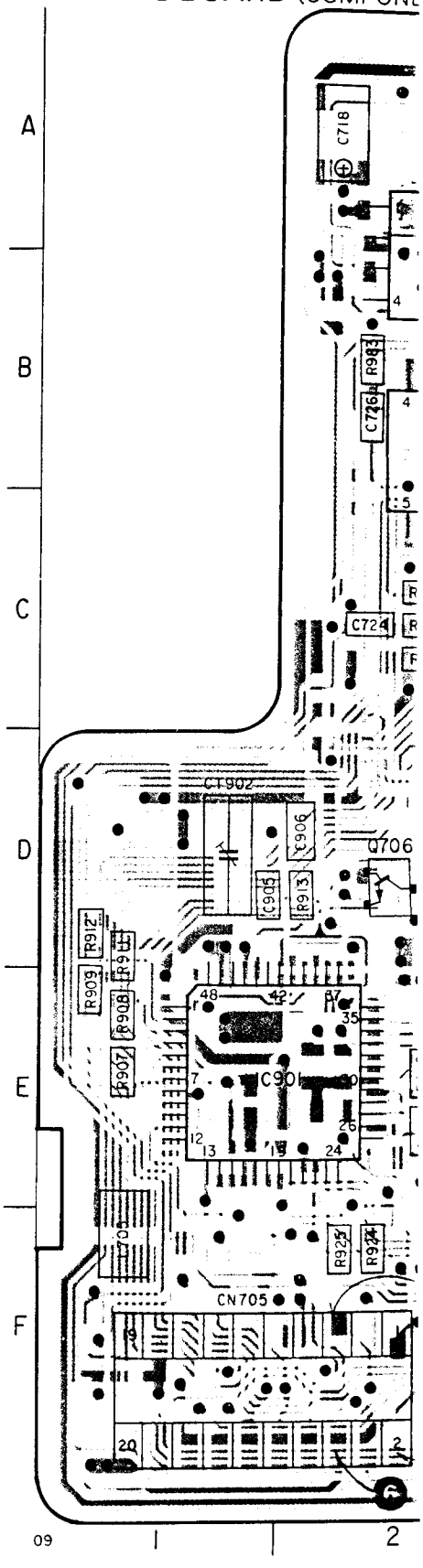

TITLE TITLE

For Service Manuals Contact
MAURITRON TECHNICAL SERVICES
8 Cherry Tree Rd, Chinnor
Oxon OX9 4QY
Tel:- 01844-351694 Fax:- 01844-352554
Email:- enquiries@mauritron.co.uk

Ref. No. CT-40 BOARD: 1000 series —

CT-40 BOARD (COMPONENT SIDE)

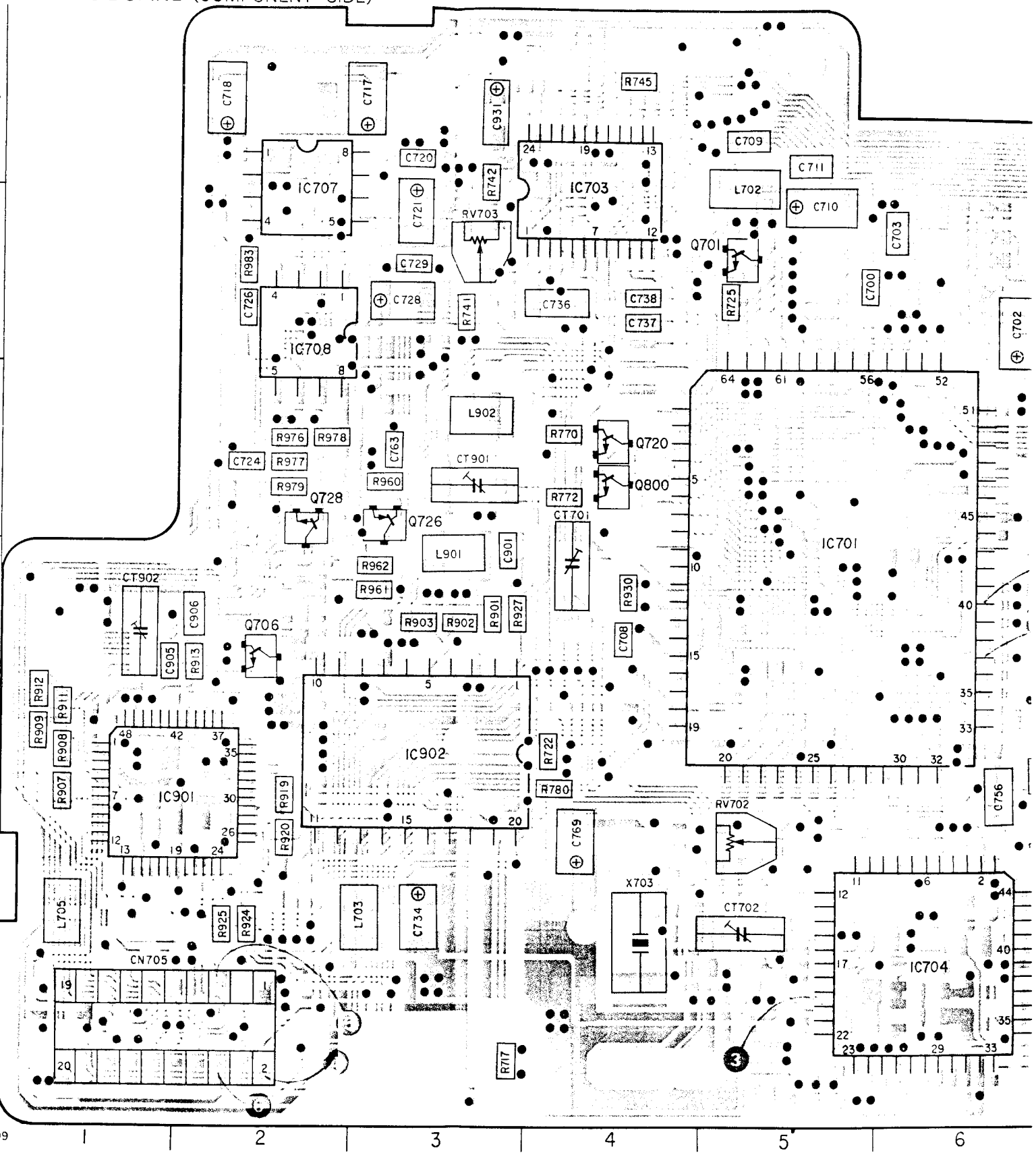

CT-40 BOARD (CONDUCTOR SIDE)

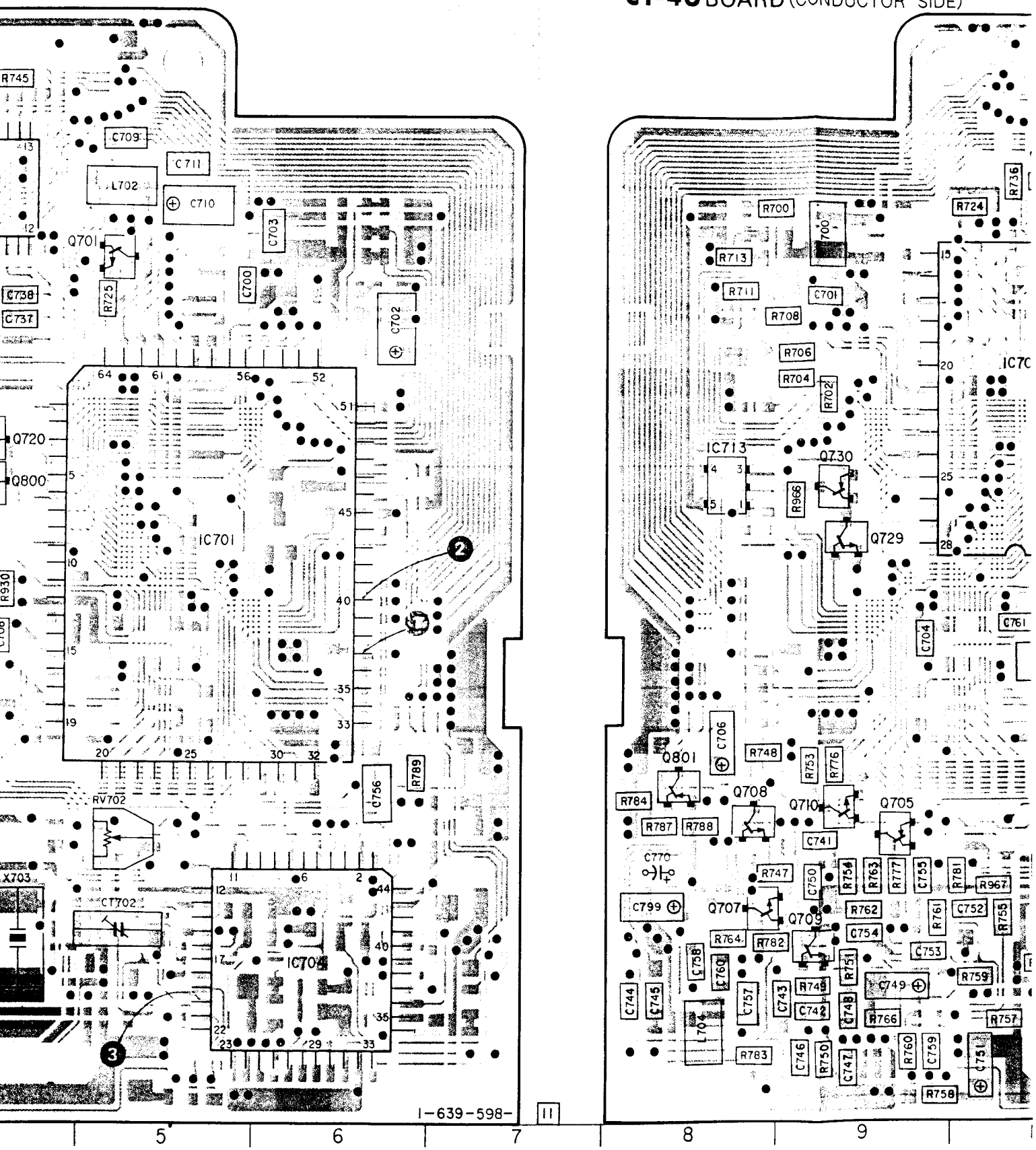

TITLE TITLE

(CONDUCTOR SIDE)

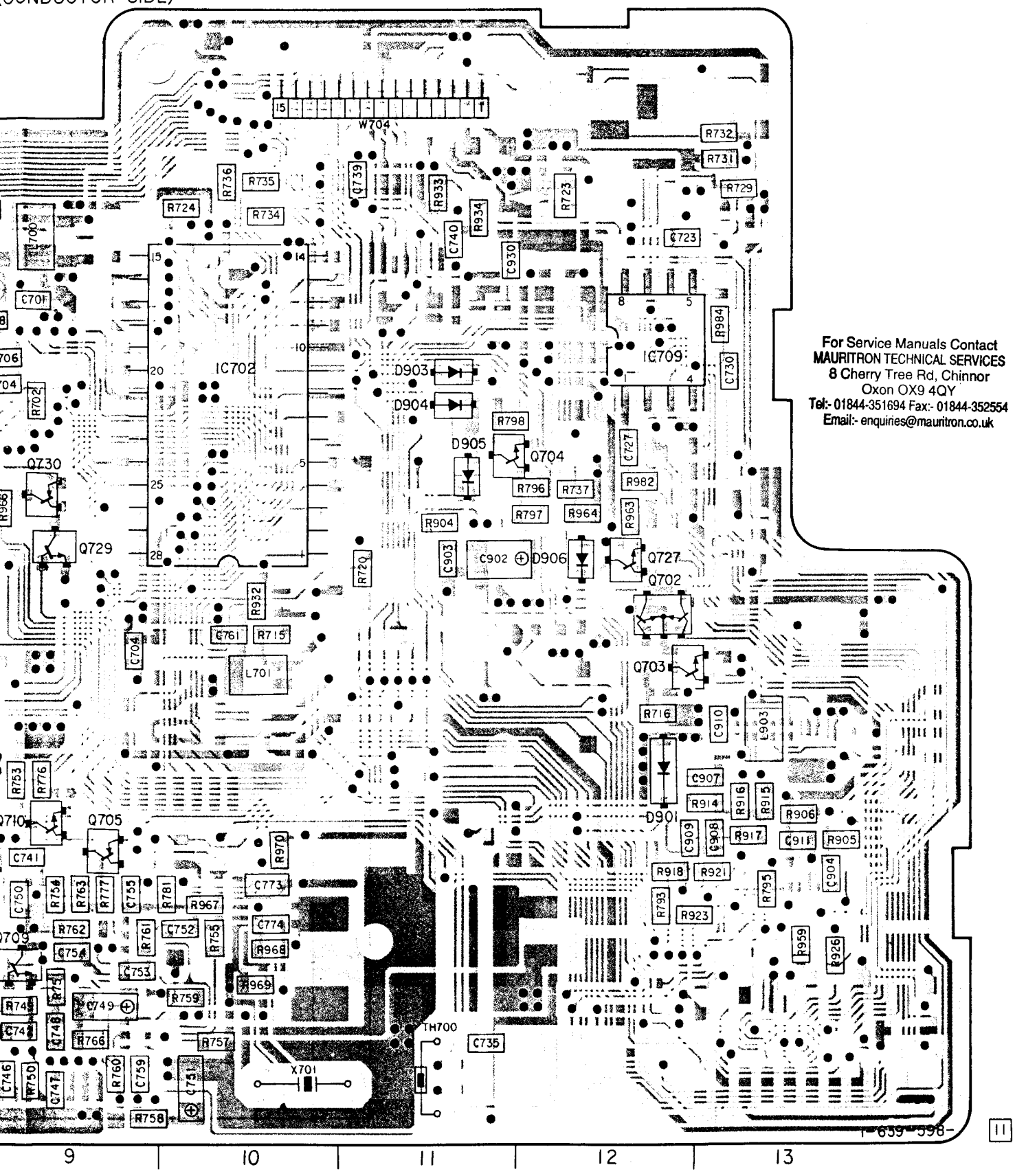

For Service Manuals Contact
MAURITRON TECHNICAL SERVICES
8 Cherry Tree Rd, Chinnor
Oxon OX9 4QY
Tel:- 01844-351694 Fax:- 01844-352554
Email:- enquiries@mauritron.co.uk

9 10 11 12 13

11

TITLE

CT-40 (TITLER PROCESS) SCHEMATIC DIAGRAM

— Ref. No. CT-40 BORRD: 1000 series —

For Service Manuals Contact
MAURITRON TECHNICAL SERVICES
8 Cherry Tree Rd, Chinnor
Oxon OX9 4QY
Tel:- 01844-351694 Fax:- 01844-352554
Email:- enquiries@mauritron.co.uk

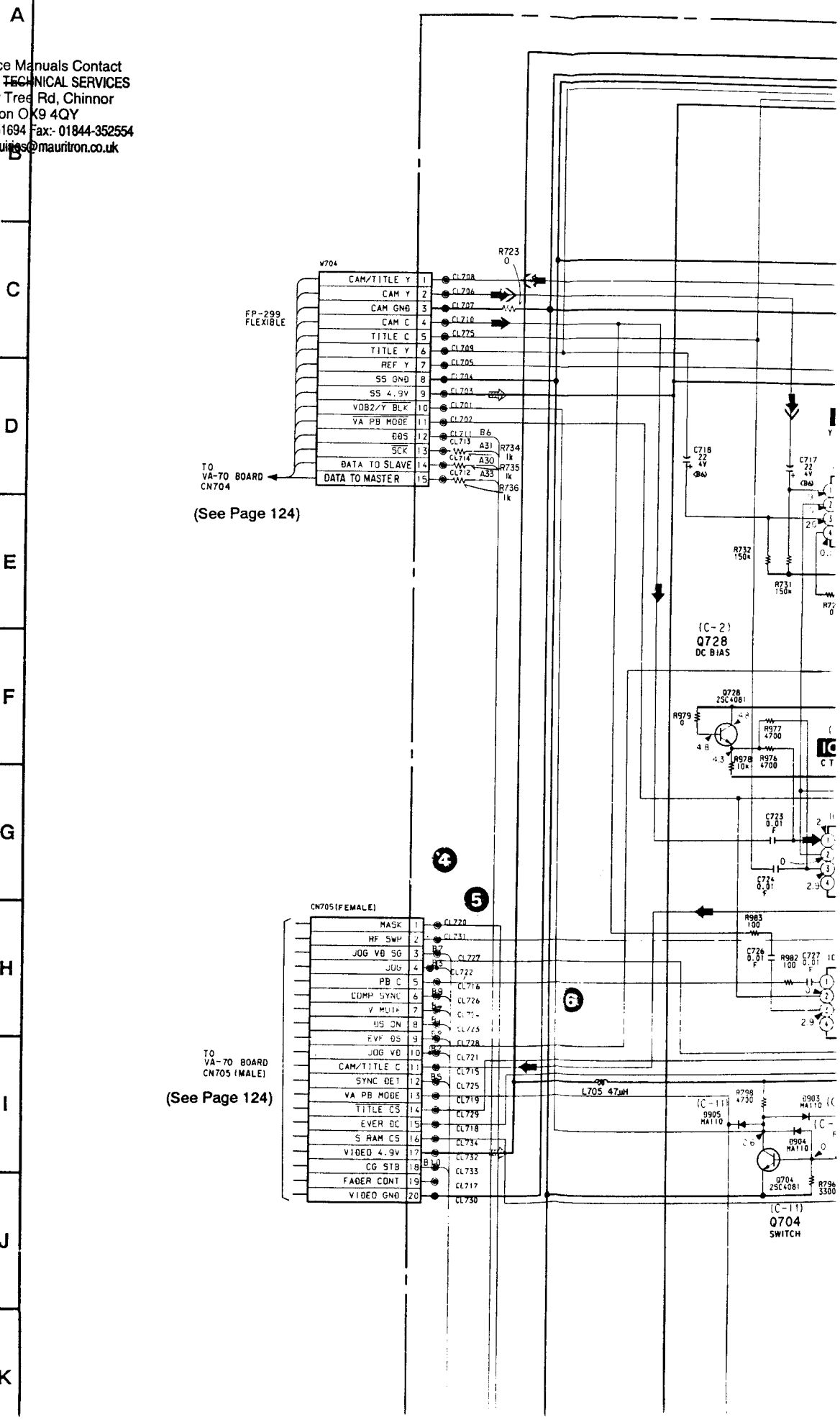

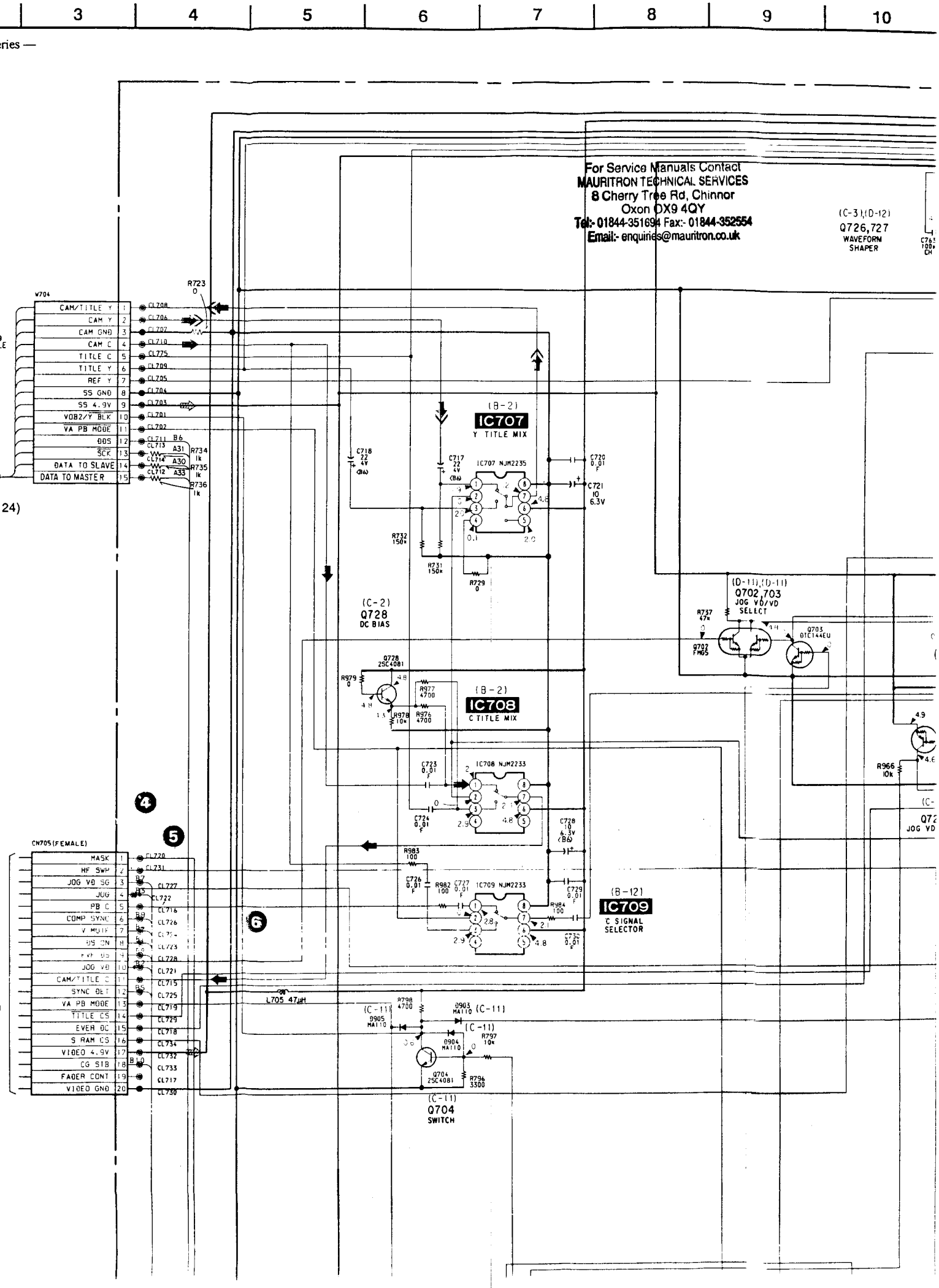
3
4
5
6
7
8
9
10
eries —
For Service Manuals Contact
MAURITRON TECHNICAL SERVICES
8 Cherry Tree Rd, Chinnor
Oxon OX9 4QY
Tel:- 01844-351694 Fax:- 01844-352554
Email:- enquiries@mauritron.co.uk
(C-3),(D-12)
Q726,727
WAVEFORM SHAPER
W704
CAM/TITLE Y
CAM Y
CAM GND
CAM C
TITLE C
TITLE Y
REF Y
SS GND
SS 4.9V
VOB2/Y BLK
VA PB MODE
SDS
SCK
DATA TO SLAVE
DATA TO MASTER
R723
R734 1k
R735 1k
R736 1k
(B-2)
IC707
Y TITLE MIX
IC707 NJM2235
C717 22 4V
C718 22 4V
C720 0.01
C721 10 6.3V
R732 150k
R731 150k
R729 0
(C-2)
Q728
DC BIAS
Q728 2SC4081
R979 0
R977 4700
R978 10k
R976 4700
(B-2)
IC708
C TITLE MIX
IC708 NJM2233
C723 0.01
C724 0.01
C728 10 6.3V
R983 100
C726 0.01
R982 100
C727 0.01
IC709 NJM2233
C729 0.01
R984 100
C730 0.01
(B-12)
IC709
C SIGNAL SELECTOR
(D-11),(D-11)
Q702,703
JOG VD/VD SELECT
R737 47k
Q707 FMG5
Q703 DTC144EU
R966 10k
CN705(FEMALE)
MASK
HF SWP
JOG VD SG
JOG
PB C
COMP SYNC
V MUTE
SS ON
EVEN DC
JOG VD
CAM/TITLE C
SYNC DET
VA PB MODE
TITLE CS
EVEN DC
S RAM CS
VIDEO 4.9V
CG STB
FADER CONT
VIDEO GND
L705 47μH
R798 4700
0905 MA110
0903 MA110
0904 MA110
R797 10k
Q704 2SC4081
R796 3300
(C-11)
Q704
SWITCH

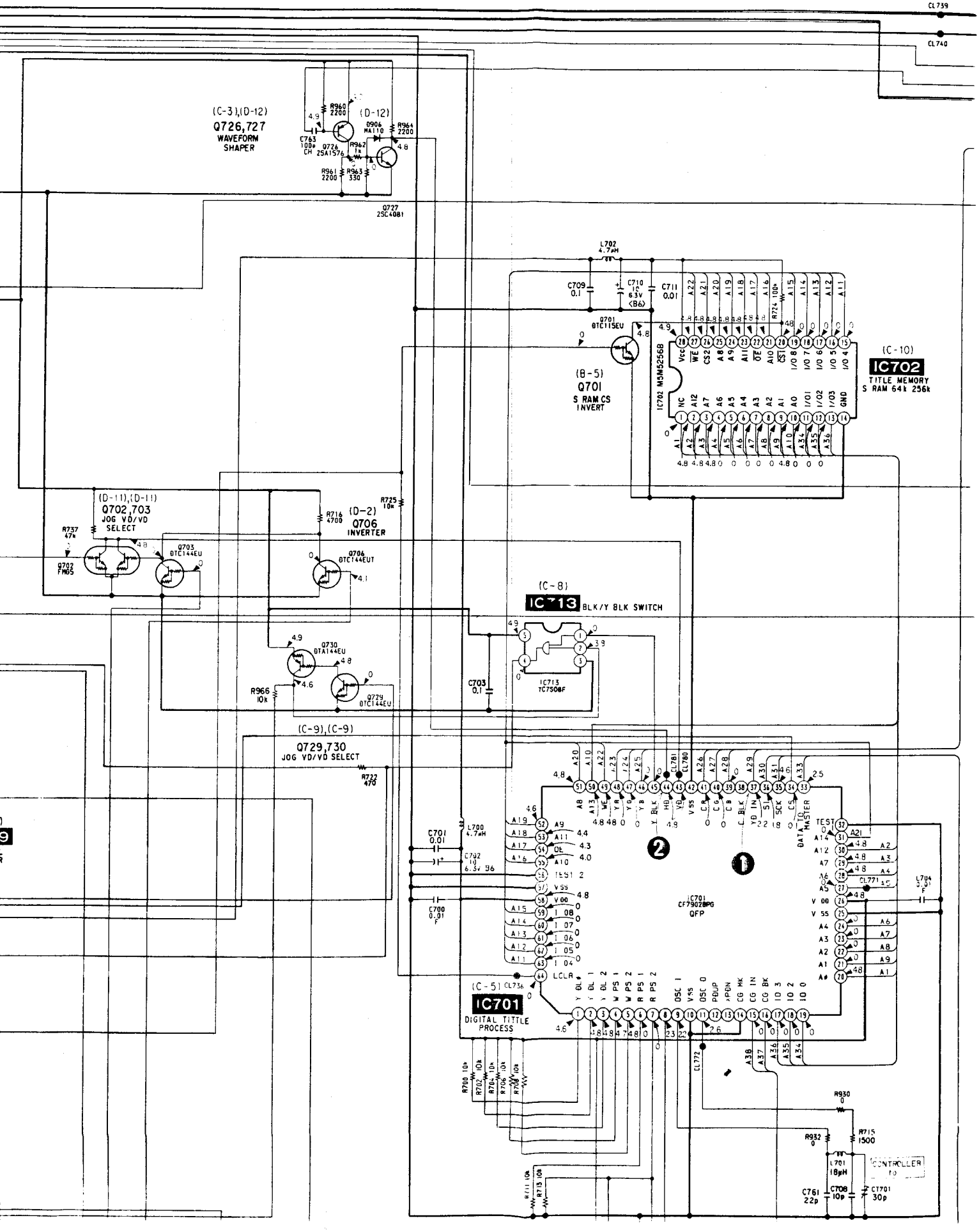
(C-3),(D-12)
Q726,727
WAVEFORM SHAPER
(D-12)
Q727
2SC4081
(C-10)
IC702
TITLE MEMORY
S RAM 64k 256k
IC702 M5M52568
(B-5)
Q701
S RAM CS INVERT
(D-11),(D-11)
Q702,703
JOG VD/VD SELECT
(D-2)
Q706
INVERTER
(C-8)
IC713 BLK/Y BLK SWITCH
IC713
TC7S08F
(C-9),(C-9)
Q729,730
JOG VD/VD SELECT
(C-5)
IC701
DIGITAL TITTLE PROCESS
IC701
CF79028PG
QFP
CONTROLLER

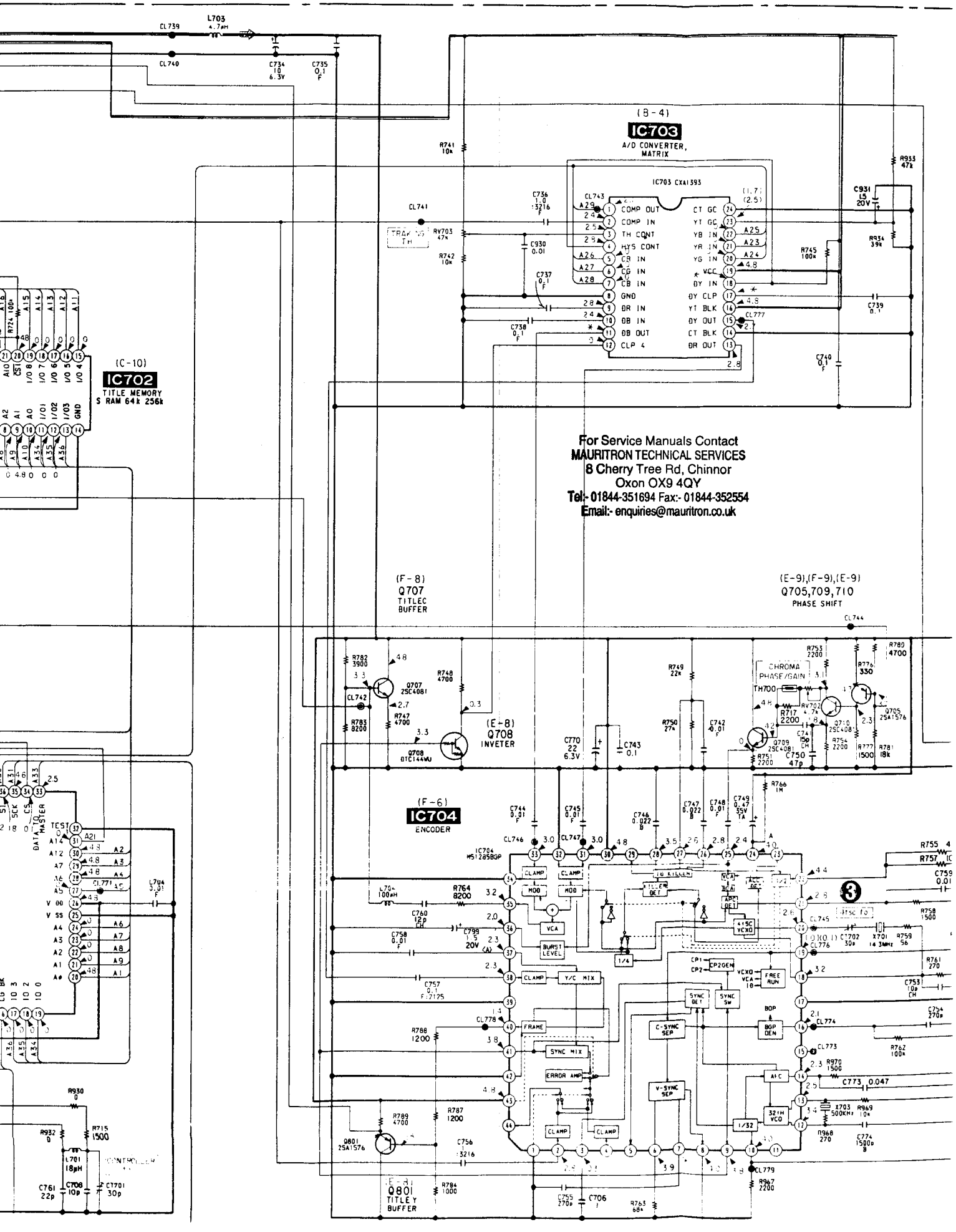
(B-4)
IC703
A/D CONVERTER, MATRIX
IC703 CXA1393
(C-10)
IC702
TITLE MEMORY
S RAM 64k 256k
(F-8)
Q707
TITLEC BUFFER
(E-8)
Q708
INVETER
(E-9),(F-9),(E-9)
Q705,709,710
PHASE SHIFT
(F-6)
IC704
ENCODER
(E-8)
Q801
TITLEY BUFFER
For Service Manuals Contact
MAURITRON TECHNICAL SERVICES
8 Cherry Tree Rd, Chinnor
Oxon OX9 4QY
Tel:- 01844-351694 Fax:- 01844-352554
Email:- enquiries@mauritron.co.uk

20 | 21 | 22 | 23 | 24 | 25 | 26 | 27

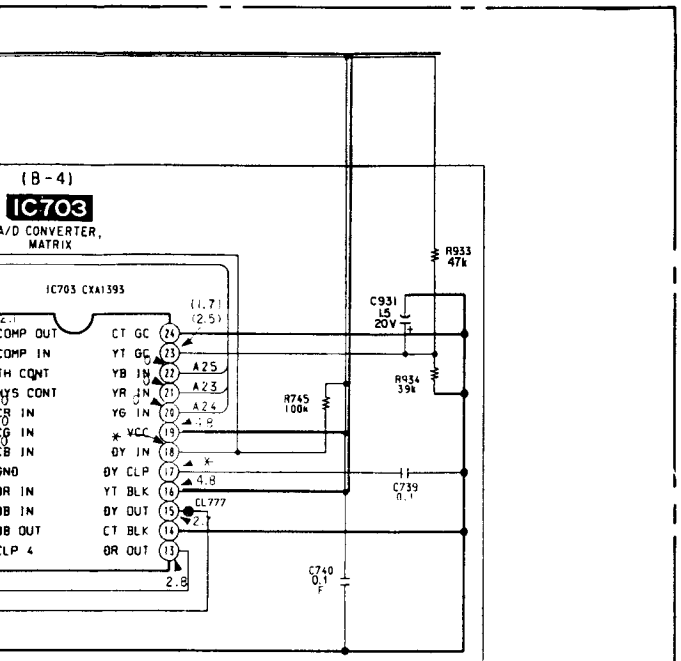

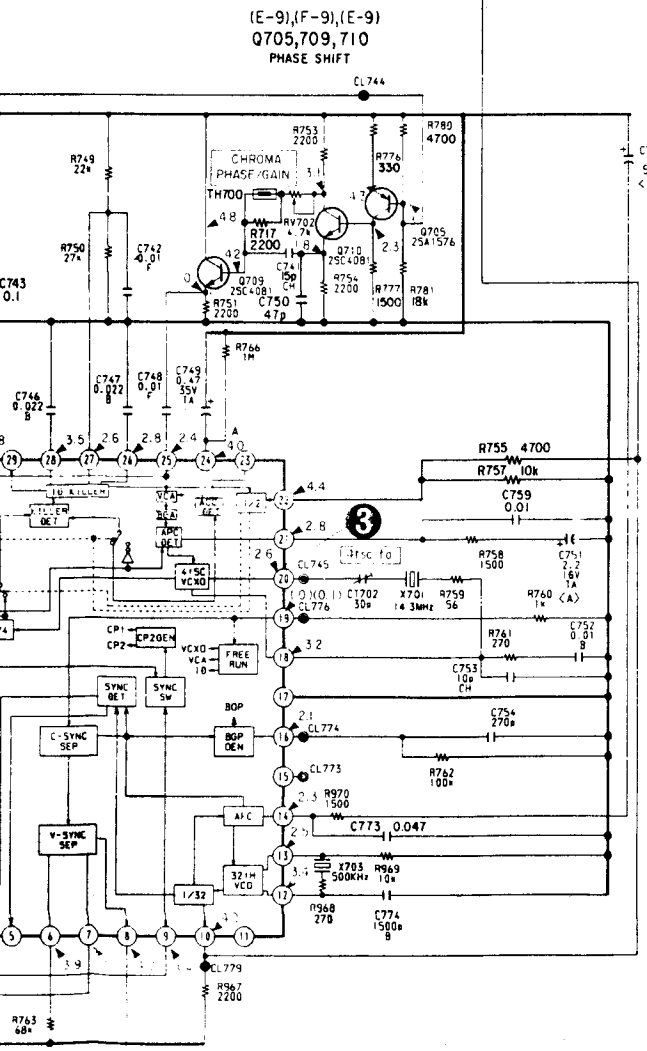

(See Page 124)

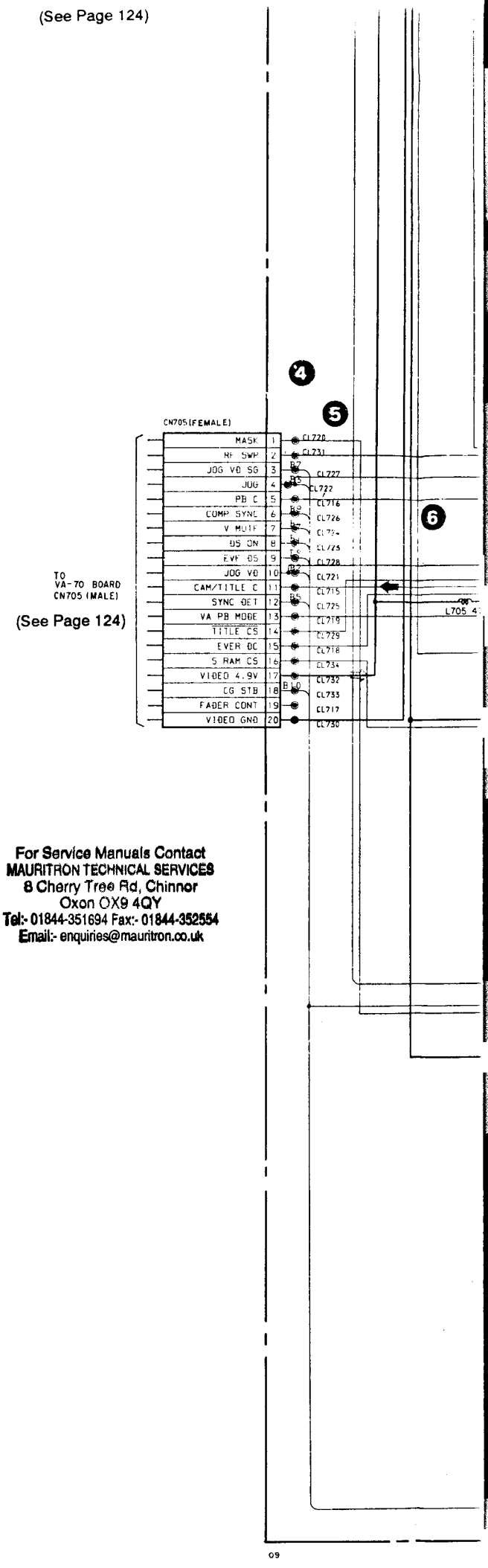

For Service Manuals Contact
MAURITRON TECHNICAL SERVICES
8 Cherry Tree Rd, Chinnor
Oxon OX9 4QY
Tel:- 01844-351694 Fax:- 01844-352554
Email:- enquiries@mauritron.co.uk

24)

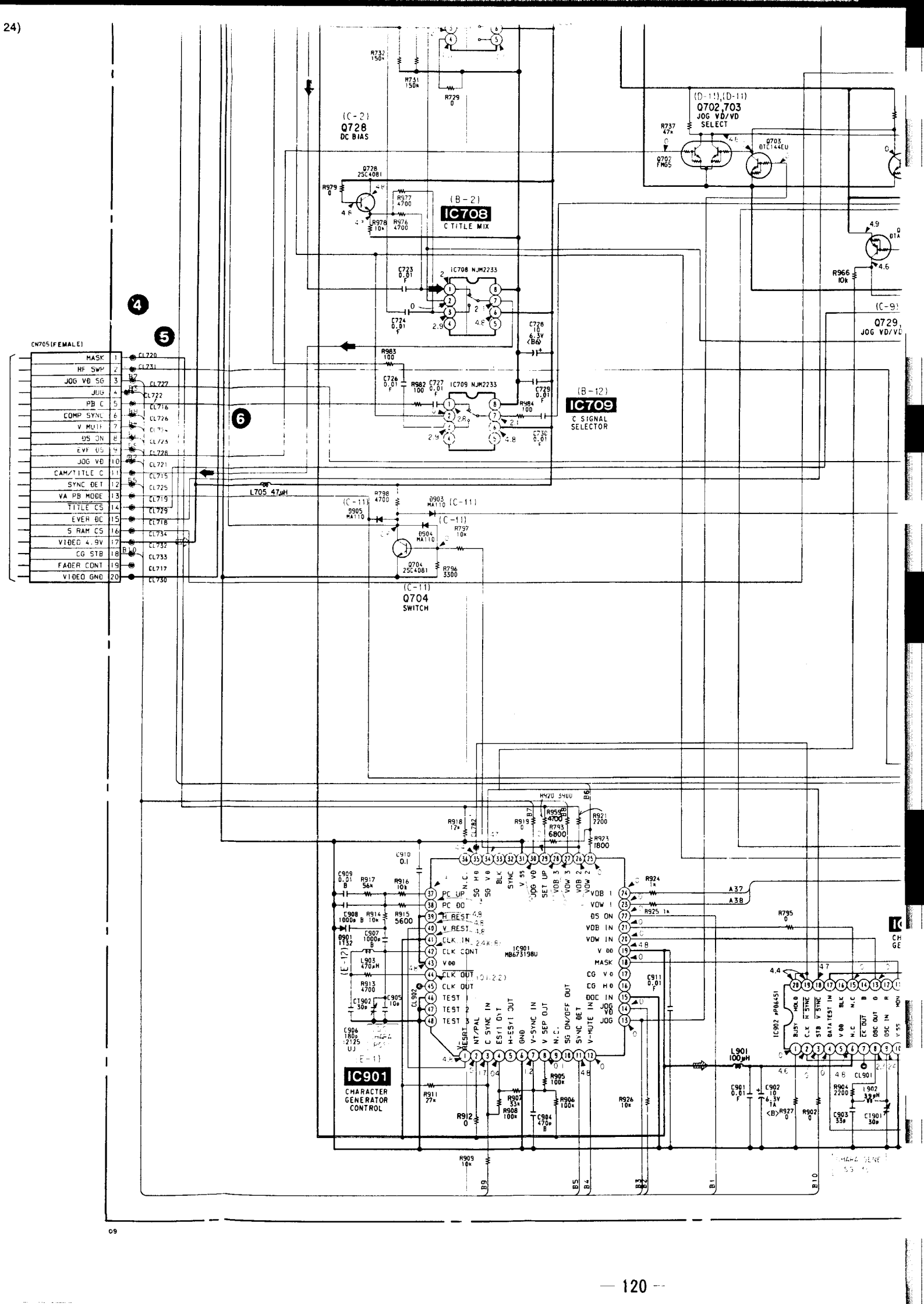

CN705(FEMALE)
MASK
RF SWP
JOG VD SG
JOG
PB C
COMP SYNC
V MUTE
DS ON
EVF DS
JOG VD
CAM/TITLE C
SYNC DET
VA PB MODE
TITLE CS
EVER DC
S RAM CS
VIDEO 4.9V
CG STB
FADER CONT
VIDEO GND
(C-2)
Q728
DC BIAS
(B-2)
IC708
C TITLE MIX
IC708 NJM2233
IC709 NJM2233
(B-12)
IC709
C SIGNAL SELECTOR
(D-11),(D-11)
Q702,703
JOG VD/VD SELECT
(C-9)
Q729
JOG VD/VD
L705 47μH
(C-11)
Q704
SWITCH
IC901
CHARACTER GENERATOR CONTROL
IC901 MB673198U
IC902 μP06451
L901 100μH

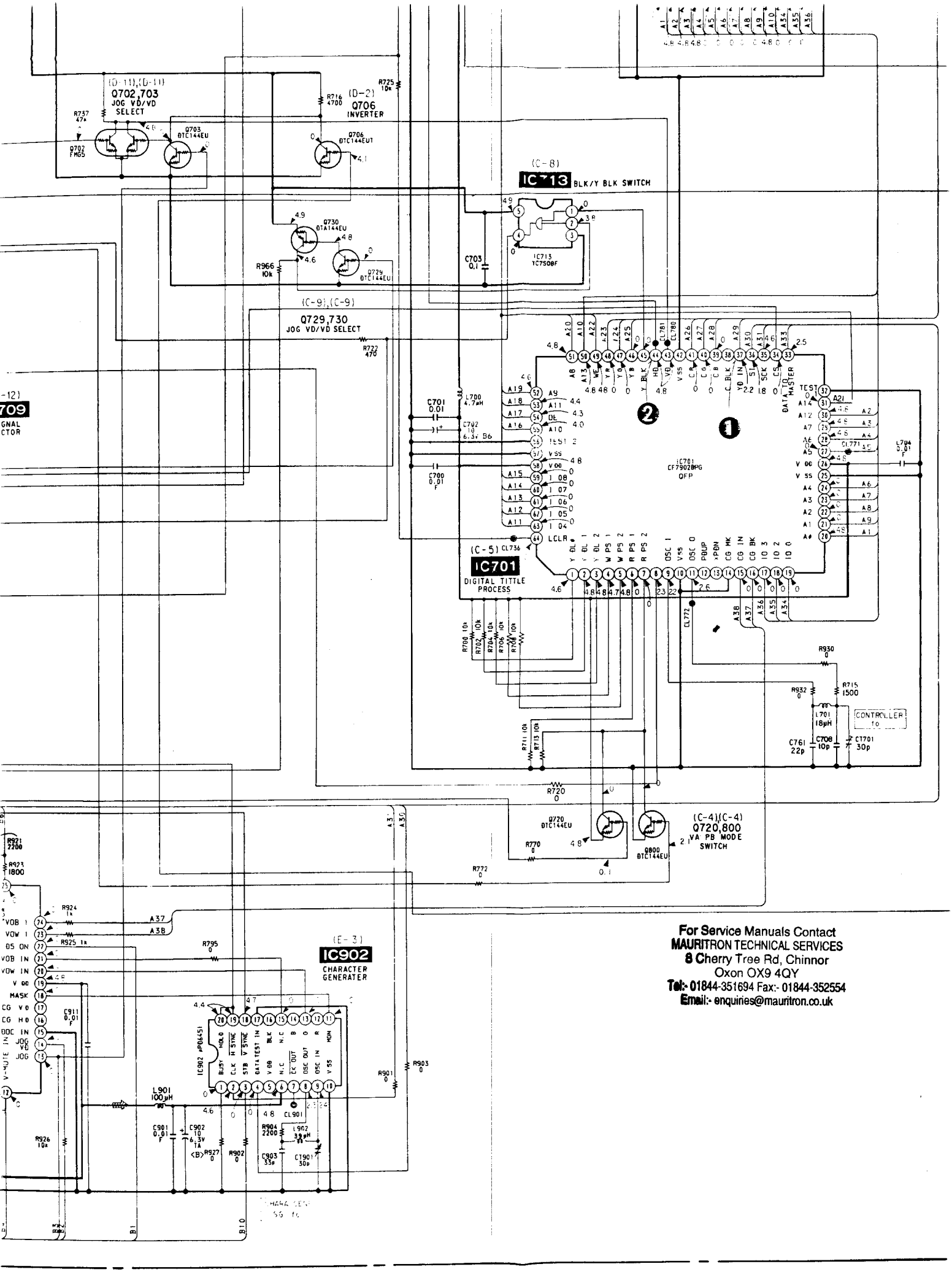

For Service Manuals Contact
MAURITRON TECHNICAL SERVICES
8 Cherry Tree Rd, Chinnor
Oxon OX9 4QY
Tel:- 01844-351694 Fax:- 01844-352554
Email:- enquiries@mauritron.co.uk

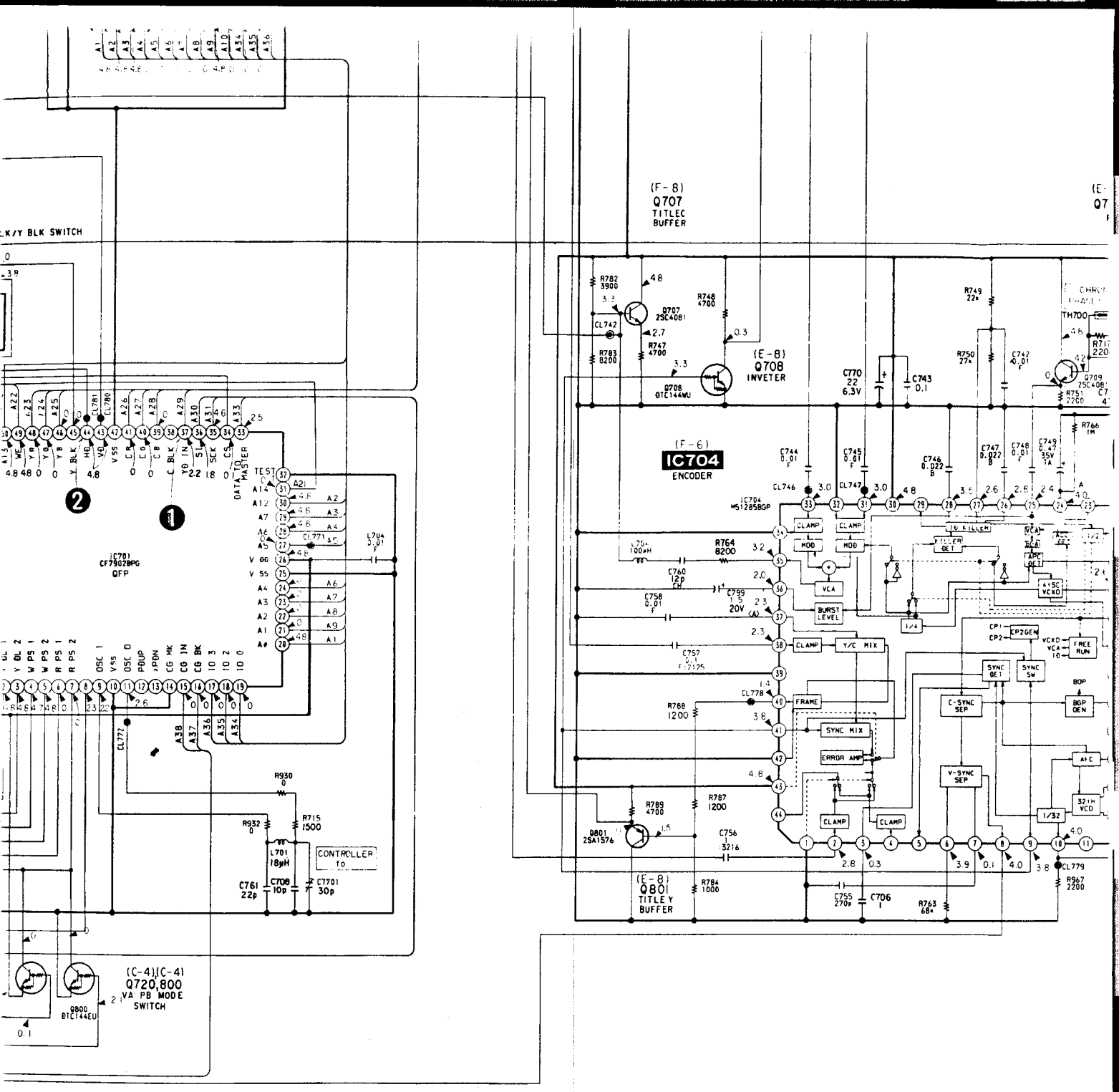
(F-8)
Q707
TITLEC
BUFFER
(E-8)
Q708
INVETER
(F-6)
IC704
ENCODER
IC701
CF7902BPG
QFP
(E-8)
Q801
TITLEY
BUFFER
(C-4),(C-4)
Q720,800
VA PB MODE
SWITCH
CONTROLLER
to
DATA TO MASTER
CLAMP
MOD
VCA
BURST LEVEL
Y/C MIX
FRAME
SYNC MIX
ERROR AMP
C-SYNC SEP
V-SYNC SEP
SYNC DET
SYNC SW
FREE RUN
BGP GEN
AFC
32H VCO
Q707 2SC4081
Q708 DTC144WU
Q709 2SC4081
Q801 2SA1576
Q800 DTC144EU
L704 0.01 F
L701 18μH
R930 0
R932 0
R715 1500
C761 22p
C708 10p
C701 30p
R782 3900
R783 8200
R747 4700
R748 4700
R749 22k
R750 27k
R751 2200
R766 1M
R764 8200
R788 1200
R789 4700
R787 1200
R784 1000
R763 68k
R967 2200
C770 22 6.3V
C743 0.1
C744 0.01 F
C745 0.01 F
C746 0.022 B
C747 0.022 B
C748 0.01 F
C749 0.47 35V
C760 12p
C758 0.01 F
C799 1.5 20V
C757 0.1 F
C756 1 3216
C755 270p
C706 1
CL746
CL747
CL778
CL779
CL772
CL771
CL780
CL781
CL742
TH700
1/4
1/32
1/2
no mark
CAMERA REC mode
can not be measured

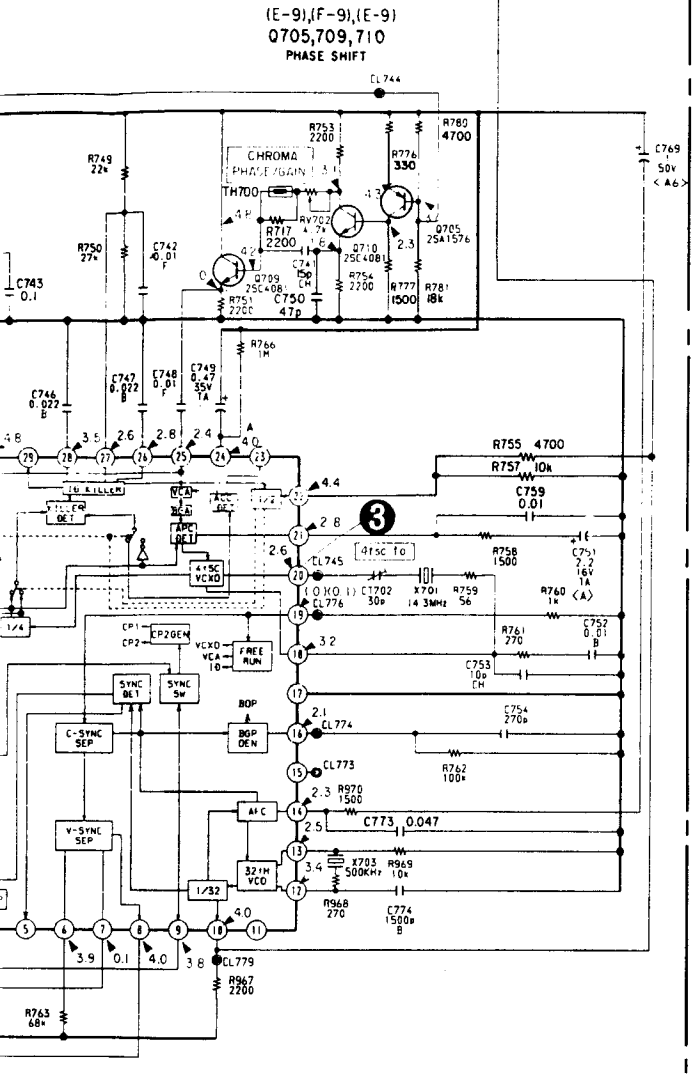

For Service Manuals Contact
MAURITRON TECHNICAL SERVICES
8 Cherry Tree Rd, Chinnor
Oxon OX9 4QY
Tel:- 01844-351694 Fax:- 01844-352554
Email:- enquiries@mauritron.co.uk

no mark : CAMERA REC mode
* : can not be measured

CT-40 BOARD

- **SIGNAL PATH**

	VIDEO SIGNAL			AUDIO SIGNAL
	CHROMA	Y	Y/CHROMA/DATA	
REC	➡	➡≫		
PB				

For Service Manuals Contact
MAURITRON TECHNICAL SERVICES
8 Cherry Tree Rd, Chinnor
Oxon OX9 4QY
Tel:- 01844-351694 Fax:- 01844-352554
Email:- enquiries@mauritron.co.uk

For Service Manuals Contact
MAURITRON TECHNICAL SERVICES
8 Cherry Tree Rd, Chinnor
Oxon OX9 4QY
Tel:- 01844-351694 Fax:- 01844-352554
Email:- enquiries@mauritron.co.uk

VA-70 BOARD (1/2)

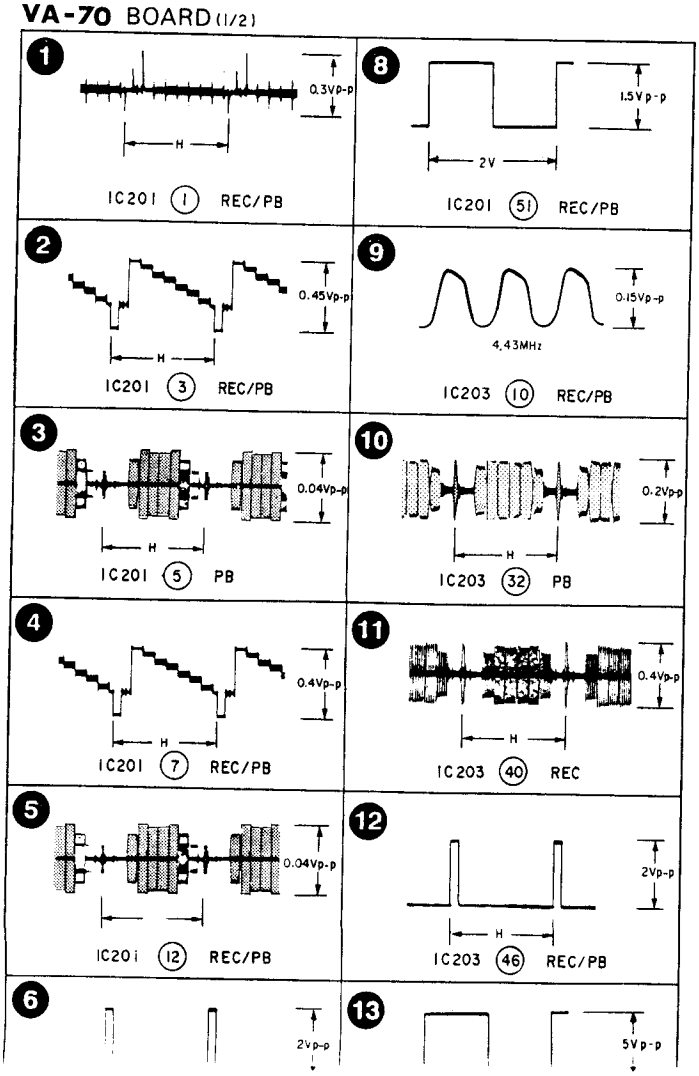

VA-70 (1/2) (VIDEO PROCESS) SCHEMA

— Ref. No. VA-70 (1/2) BOARD: 1000 series —

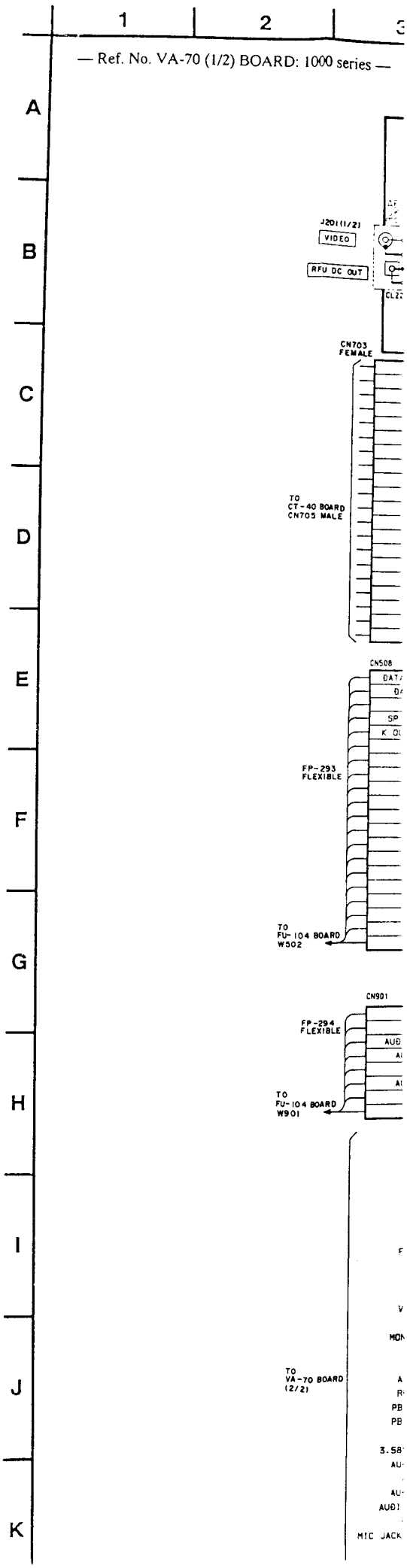

No. VA-70 (1/2) BOARD: 1000 series —

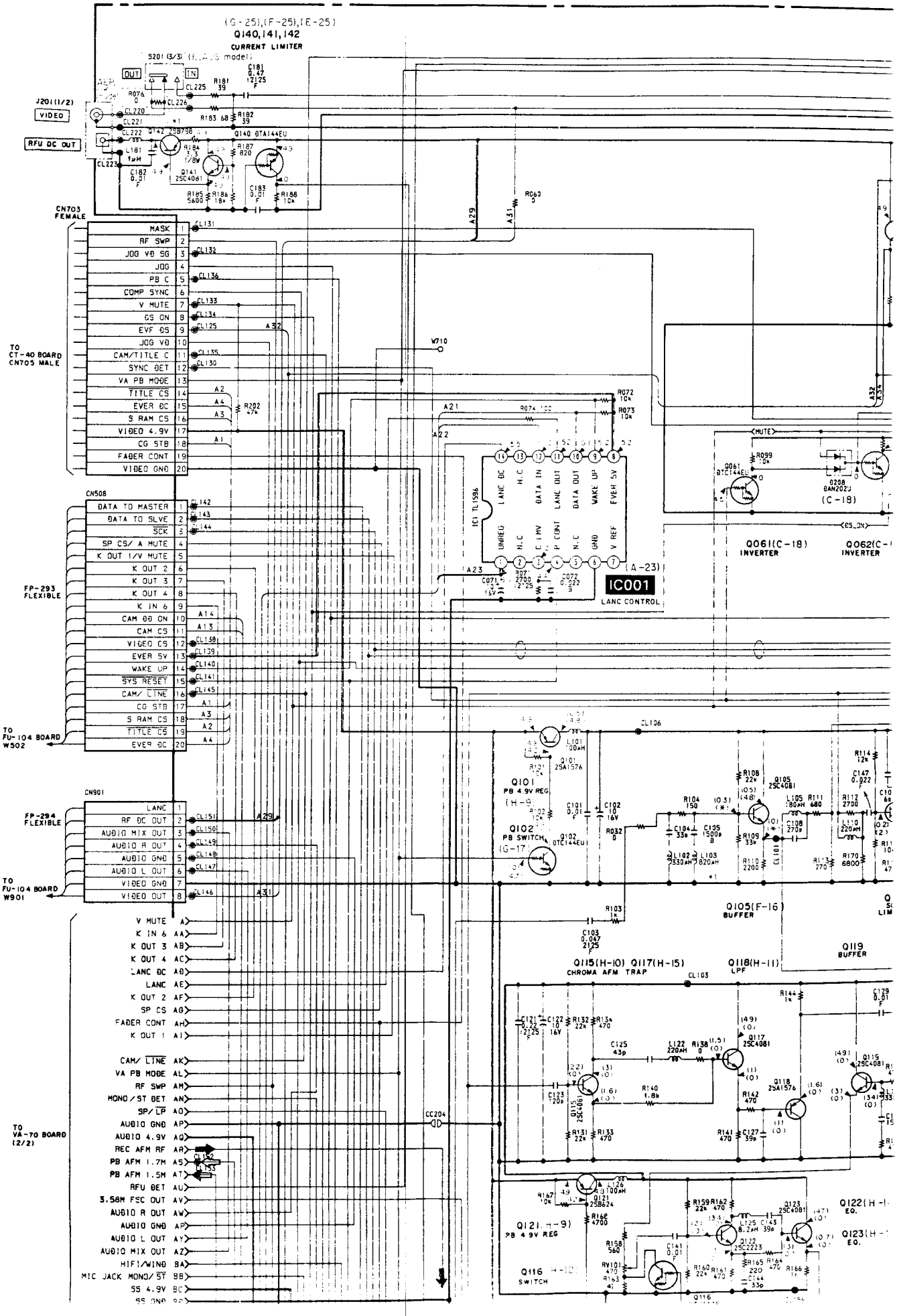

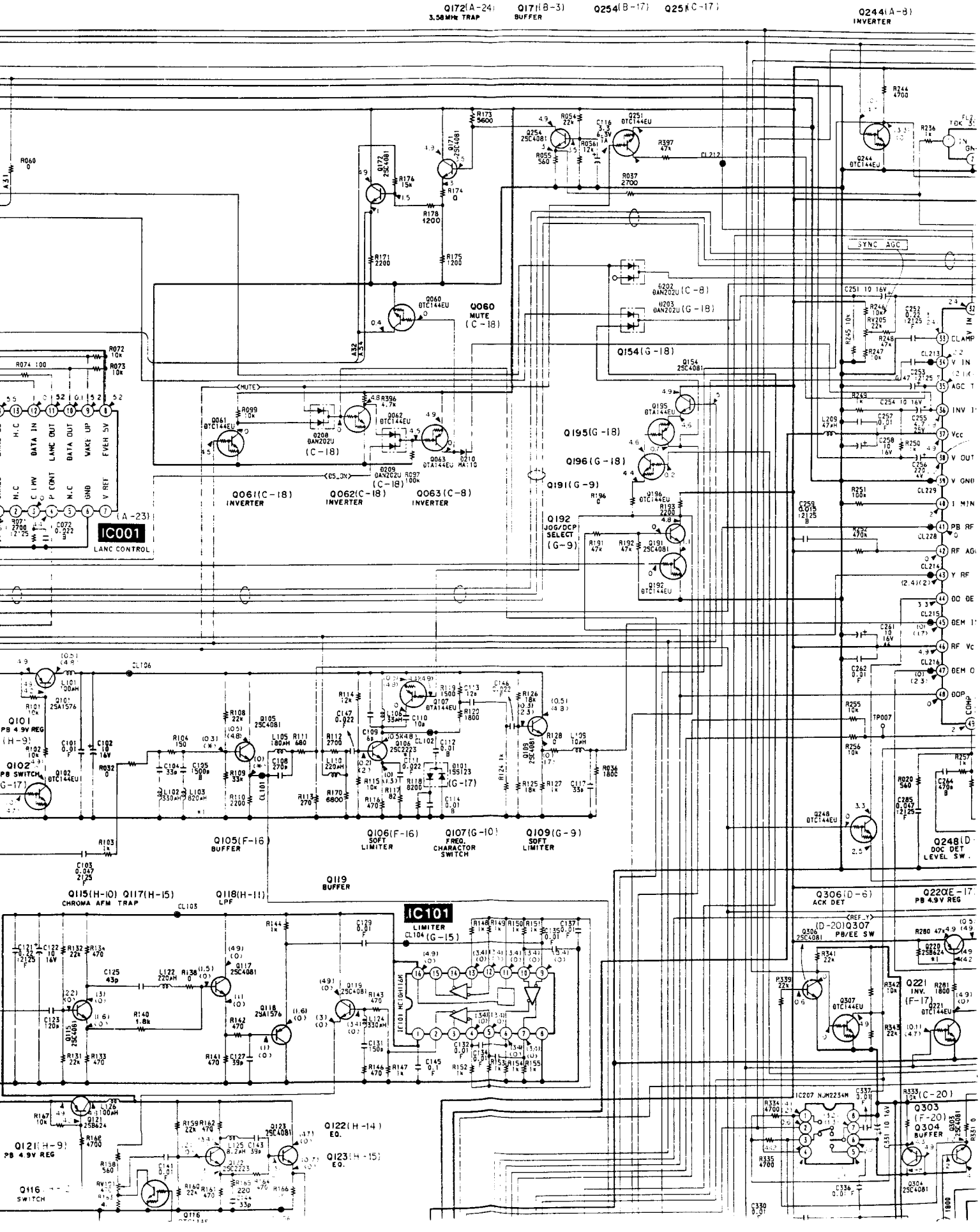
Q172(A-24) 3.58MHz TRAP
Q171(B-3) BUFFER
Q254(B-17)
Q251(C-17)
Q244(A-8) INVERTER
Q060 MUTE (C-18)
Q154(G-18)
Q195(G-18)
Q196(G-18)
Q191(G-9)
Q192 JOG/DCP SELECT (G-9)
Q061(C-18) INVERTER
Q062(C-18) INVERTER
Q063(C-18) INVERTER
IC001 LANC CONTROL
Q101 PB 4.9V REG
Q102 PB SWITCH
Q105(F-16) BUFFER
Q106(F-16) SOFT LIMITER
Q107(G-10) FREQ. CHARACTOR SWITCH
Q109(G-9) SOFT LIMITER
Q119 BUFFER
Q115(H-10) Q117(H-15) CHROMA AFM TRAP
Q118(H-11) LPF
IC101 LIMITER
Q121(H-9) PB 4.9V REG
Q116 SWITCH
Q122(H-14) EQ.
Q123(H-15) EQ.
Q306(D-6) ACK DET
Q307 PB/EE SW
Q221 INV. (F-17)
Q303 (F-20) Q304 BUFFER
IC207 NJM2234M
SYNC AGC
CLAMP
V IN
AGC
INV
Vcc
V OUT
V GND
I MIN
PB RF
RF AGC
Y RF
DOC DET LEVEL SW.

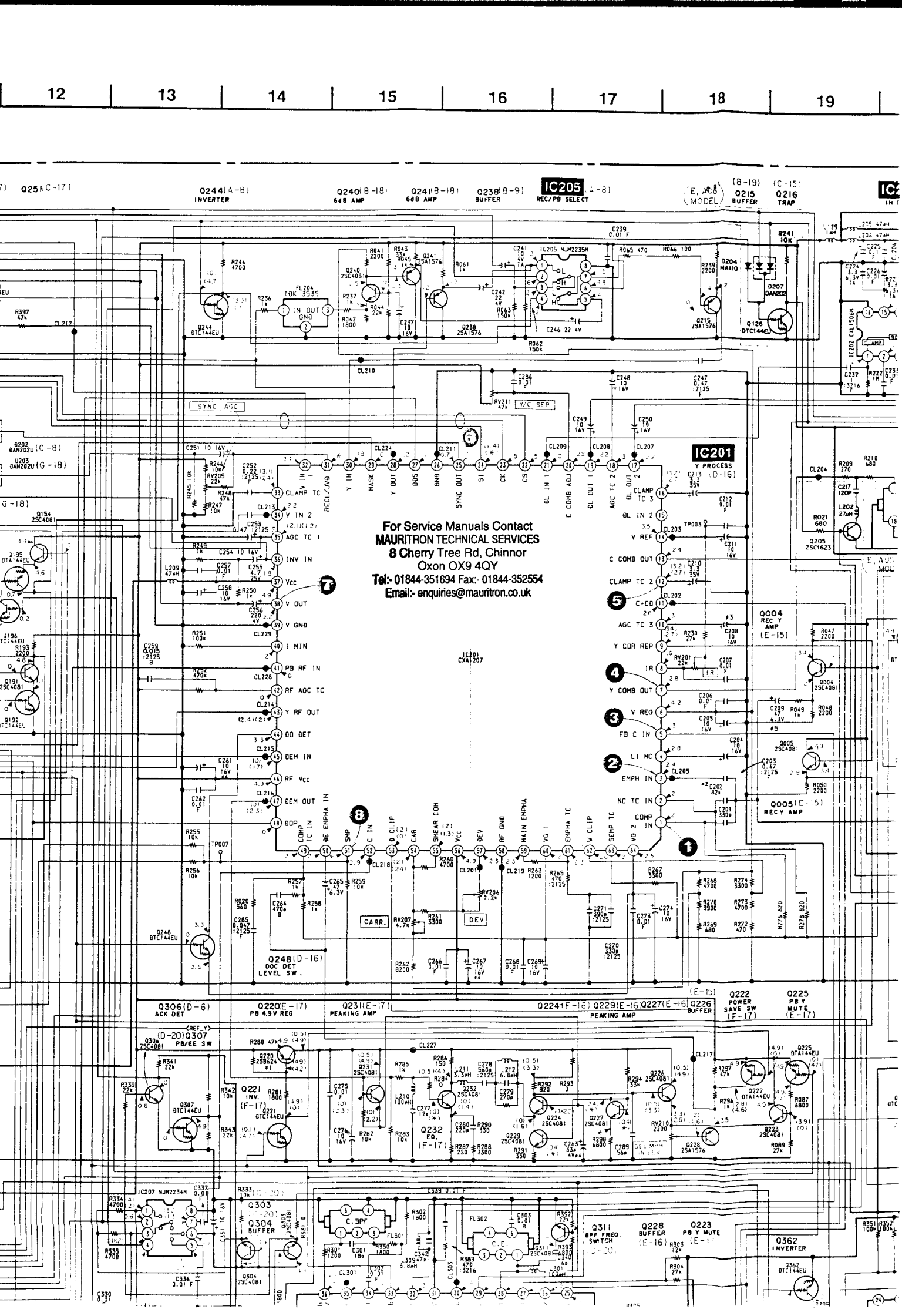
12
13
14
15
16
17
18
19
Q244 (A-8) INVERTER
Q240 (B-18) 6dB AMP
Q241 (B-18) 6dB AMP
Q238 (B-9) BUFFER
IC205 (A-8) REC/PB SELECT
(E, AUS MODEL)
(B-19) Q215 BUFFER
(C-15) Q216 TRAP
IC205 NJM2235M
IC201 Y PROCESS
IC201 CXA1207
For Service Manuals Contact
MAURITRON TECHNICAL SERVICES
8 Cherry Tree Rd, Chinnor
Oxon OX9 4QY
Tel:- 01844-351694 Fax:- 01844-352554
Email:- enquiries@mauritron.co.uk
SYNC AGC
Y/C SEP
CARR.
DEV
Q248 (D-16) DOC DET LEVEL SW.
Q306 (D-6) ACK DET
Q220 (E-17) PB 4.9V REG
Q231 (E-17) PEAKING AMP
Q224 (F-16) Q229 (E-16) Q227 (E-16) Q226 PEAKING AMP BUFFER
Q222 POWER SAVE SW (F-17)
Q225 PB Y MUTE (E-17)
Q004 REC Y AMP (E-15)
Q005 (E-15) RECY AMP
Q221 INV. (F-17)
Q232 EQ. (F-17)
Q303 (F-20)
Q304 BUFFER
Q311 BPF FREQ. SWITCH (D-20)
Q228 BUFFER (E-16)
Q223 PB Y MUTE (E-17)
Q362 INVERTER
C. BPF
C.E.

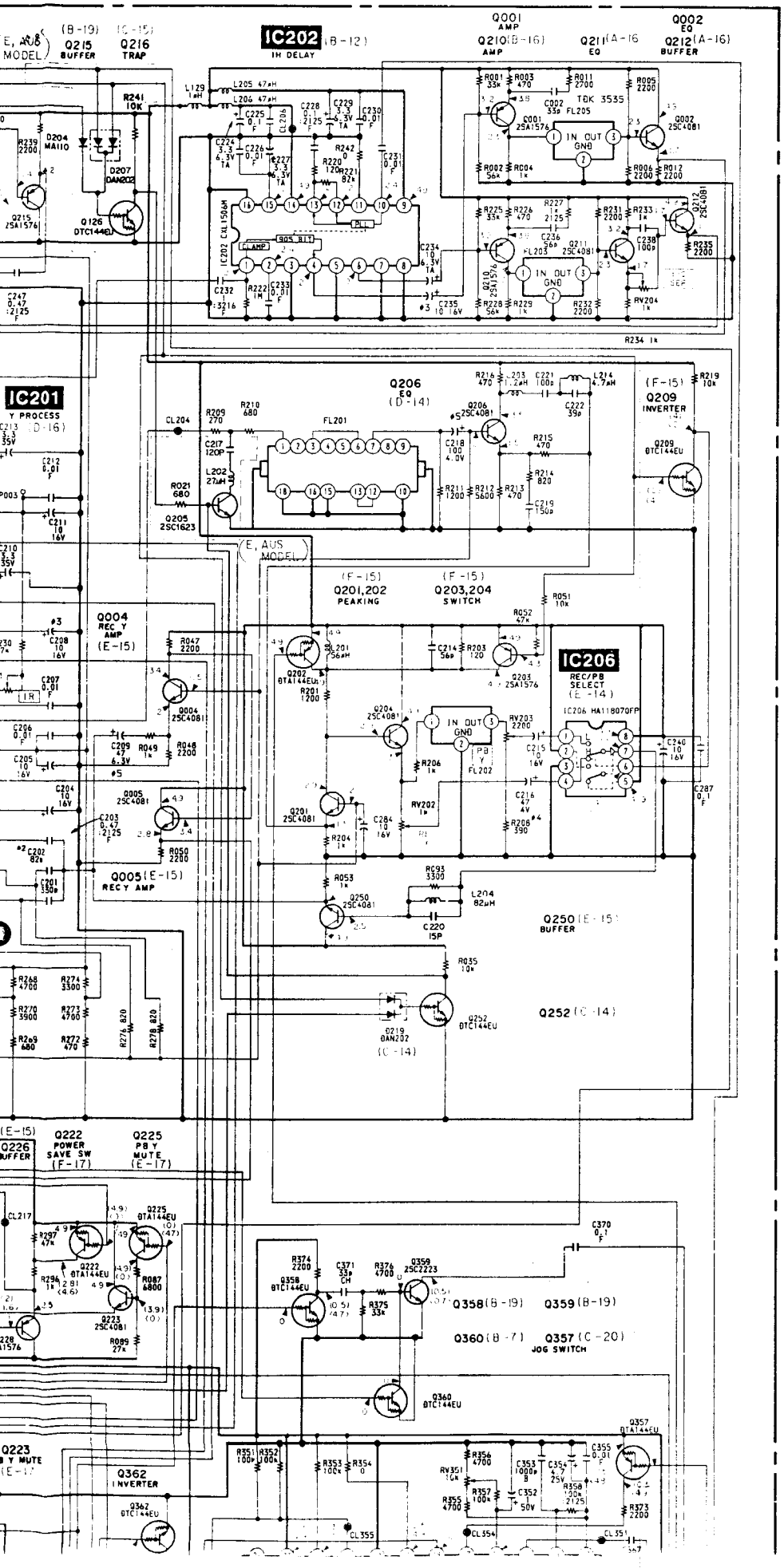
IC202
IH DELAY
Q001
AMP
Q002
EQ
Q210 AMP
Q211 EQ
Q212 BUFFER
Q215 BUFFER
Q216 TRAP
IC201
Y PROCESS
Q206
EQ
Q209
INVERTER
Q205 2SC1623
Q004
REC Y AMP
Q005 REC Y AMP
Q201,202
PEAKING
Q203,204
SWITCH
IC206
REC/PB SELECT
IC206 HA118070FP
Q250 BUFFER
Q252
Q222
POWER SAVE SW
Q225
PB Y MUTE
Q358
Q359
Q360
JOG SWITCH
Q357
Q362
INVERTER
TDK 3535
FL205
FL203
FL201
FL202
(E, AUS MODEL)

VA-70 BOARD (1/2)

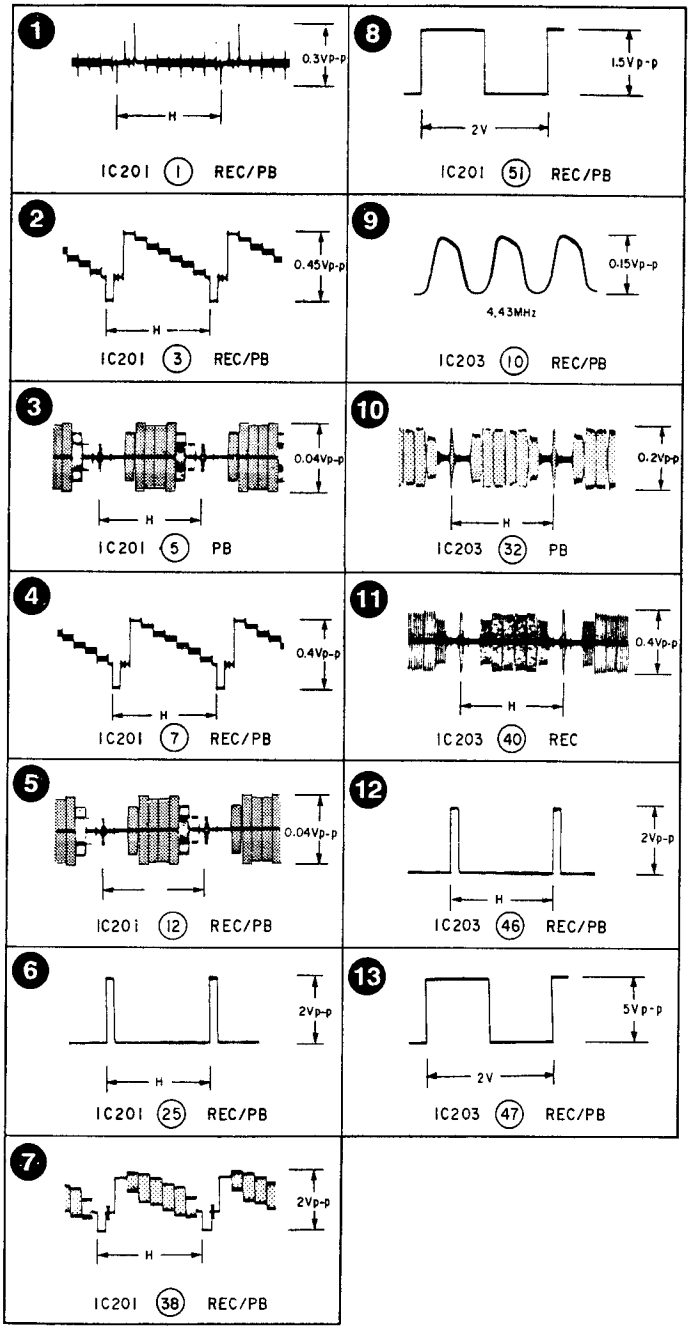

- **SIGNAL PATH**

	VIDEO SIGNAL			AUDIO SIGNAL
	CHROMA	Y	Y/CHROMA/DATA	
REC	➡	➡	➡	➡
PB	⇨	⇨	⇨	⇨

For Service Manuals Contact
MAURITRON TECHNICAL SERVICES
8 Cherry Tree Rd, Chinnor
Oxon OX9 4QY
Tel:- 01844-351694 Fax:- 01844-352554
Email:- enquiries@mauritron.co.uk

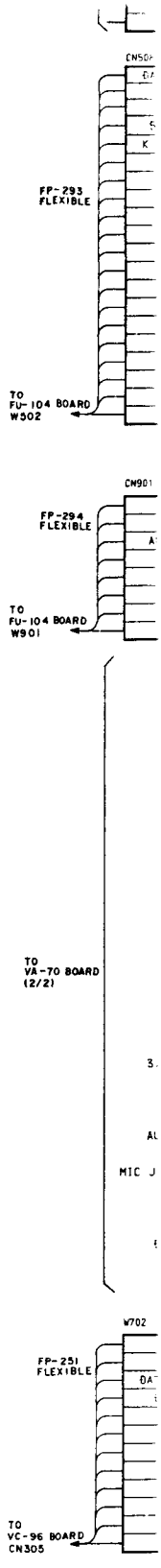

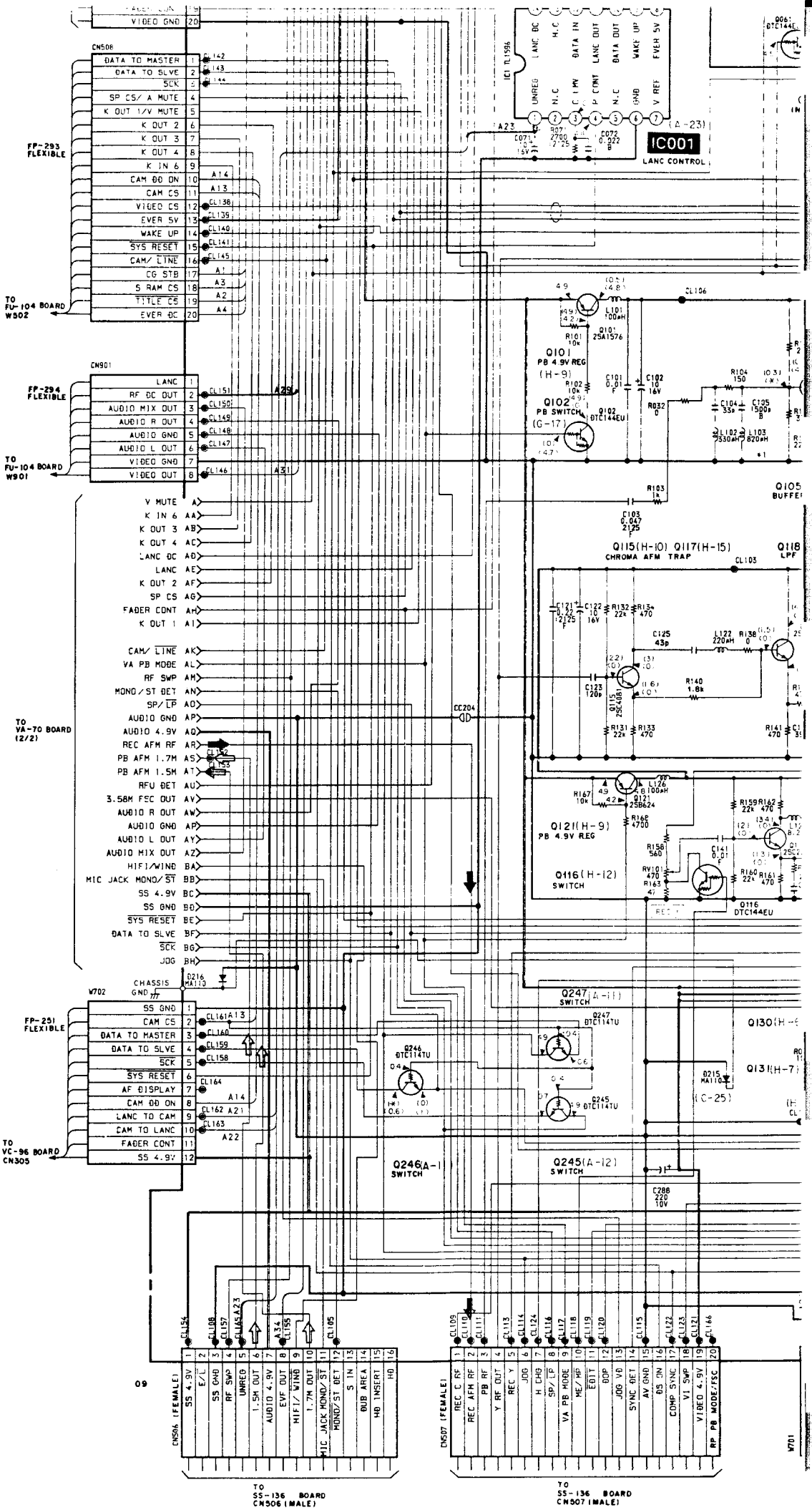

(See Page 154)

(See Page 154)

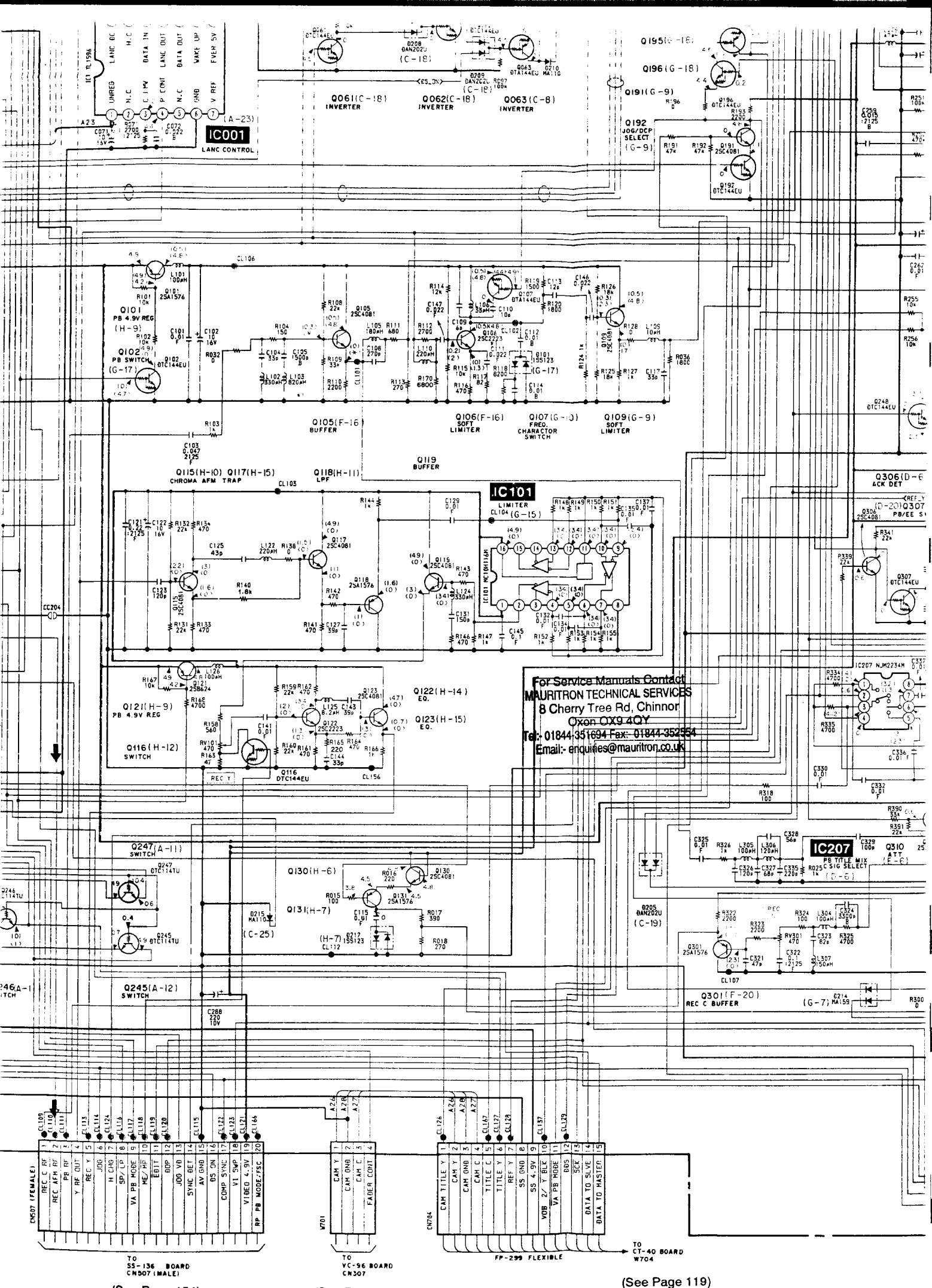

For Service Manuals Contact:
MAURITRON TECHNICAL SERVICES
8 Cherry Tree Rd, Chinnor
Oxon OX9 4QY
Tel:- 01844 351694 Fax: 01844 352554
Email:- enquiries@mauritron.co.uk

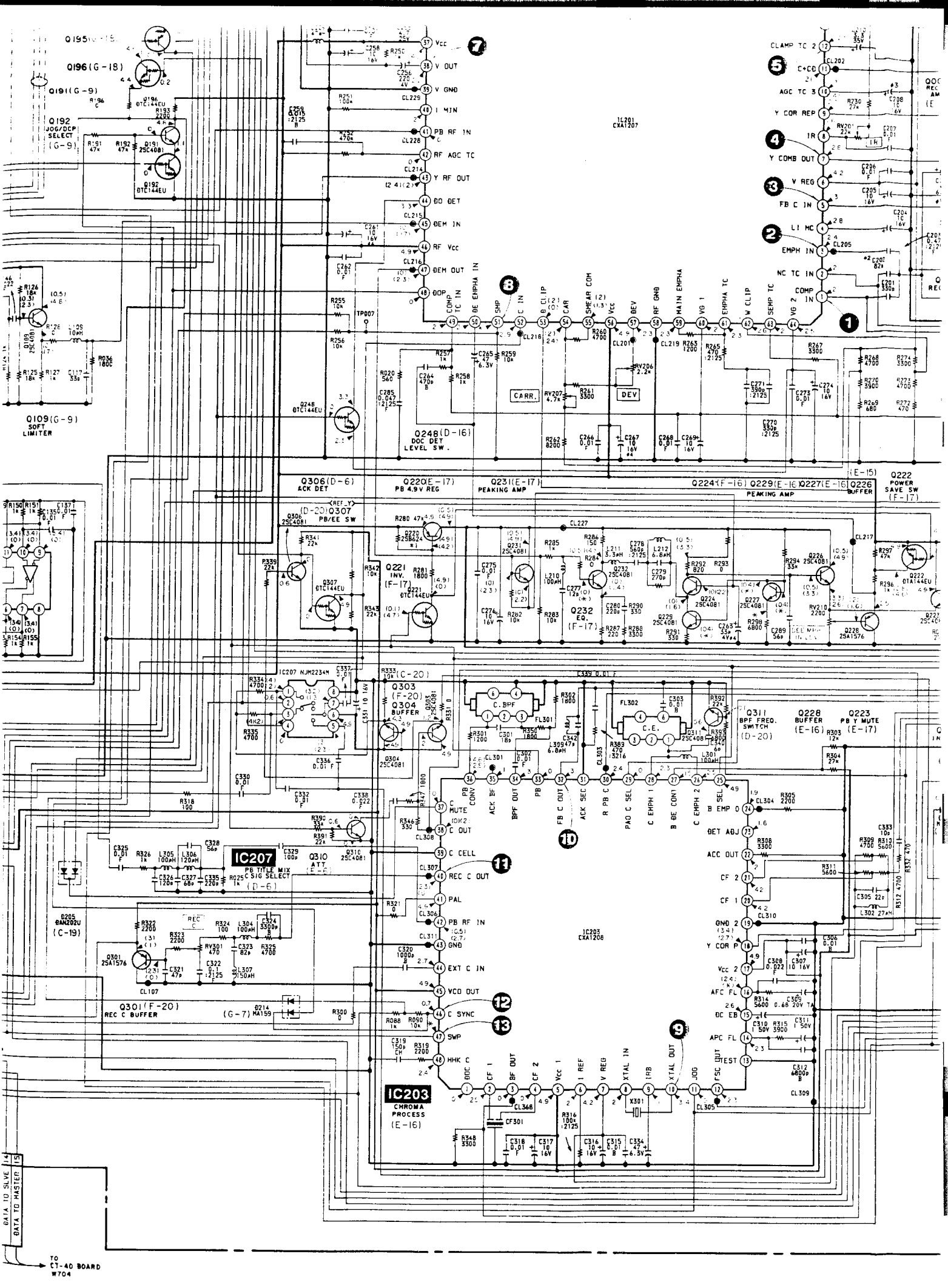

Q195
Q196 (G-18)
Q191 (G-9)
Q192 JOG/DCP SELECT (G-9)
Q109 (G-9) SOFT LIMITER
IC201 CXA1207
Q248 (D-16) DOC DET LEVEL SW.
CARR.
DEV
Q306 (D-6) ACK DET
Q220 (E-17) PB 4.9V REG
Q231 (E-17) PEAKING AMP
Q224 (F-16) Q229 (E-16) Q227 (E-16) Q226 BUFFER
Q222 POWER SAVE SW (F-17)
Q307 PB/EE SW
Q221 INV. (F-17)
Q232 EQ. (F-17)
IC207 NJM2234M
Q303 (F-20) Q304 BUFFER
C. BPF
C. E.
Q311 BPF FREQ. SWITCH (D-20)
Q228 BUFFER (E-16)
Q223 PB Y MUTE (E-17)
IC207 PB TITLE MIX C SIG SELECT (D-6)
Q310 ATT (F-6)
Q205 BAN202U (C-19)
Q301 (F-20) REC C BUFFER
IC203 CXA1208
IC203 CHROMA PROCESS (E-16)
DATA TO SLVE
DATA TO MASTER
TO CT-40 BOARD W704

(See Page 119)

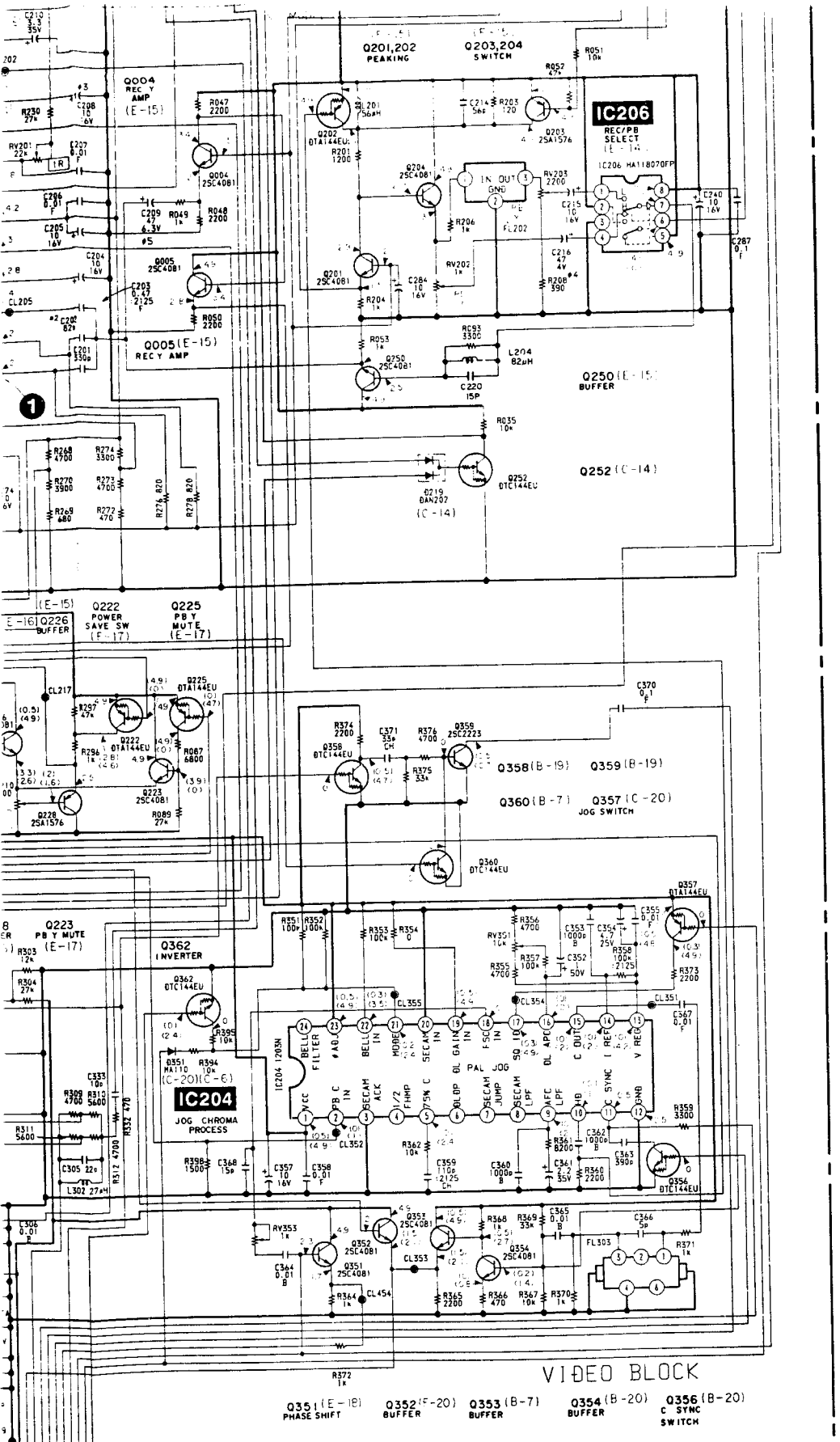

no mark : VTR REC/PB mode
( ) : REC mode
< > : PB mode
* : Can not be measured

VA-70 BOARD (1/2)

For Service Manuals Contact
MAURITRON TECHNICAL SERVICES
8 Cherry Tree Rd, Chinnor
Oxon OX9 4QY
Tel:- 01844-351694 Fax:- 01844-352554
Email:- enquiries@mauritron.co.uk

VA-70 (VIDEO PROCESS, AUDIO PROCESS) PRINTED WIRING BOARD

— Ref. No. VA-70 BOARD: 1000 series —

For Service Manuals Contact
MAURITRON TECHNICAL SERVICES
8 Cherry Tree Rd, Chinnor
Oxon OX9 4QY
Tel:- 01844-351694 Fax:- 01844-352554
Email:- enquiries@mauritron.co.uk

VA-70 BOARD (COMPONENT SIDE)

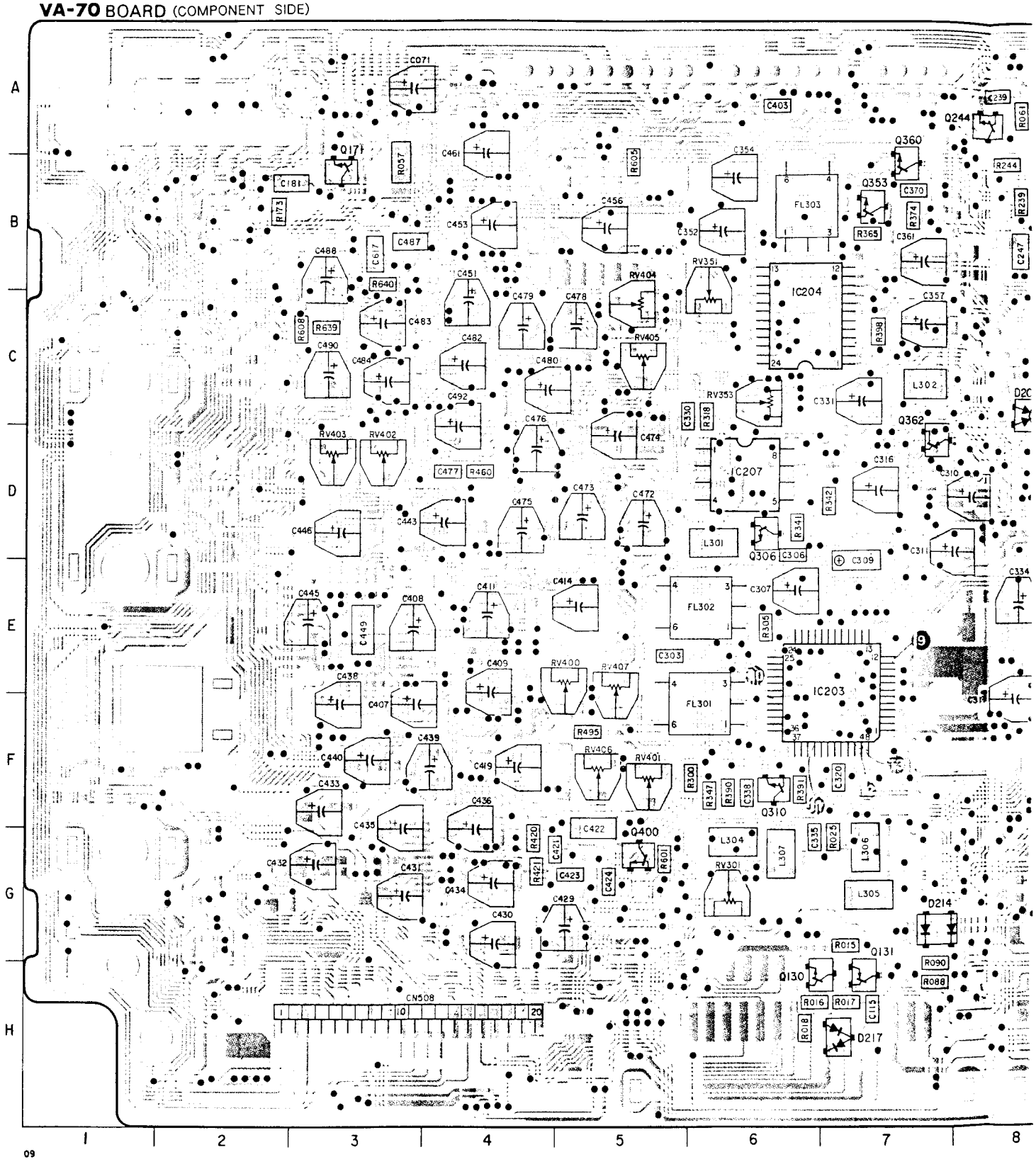

For Service Manuals Contact
MAURITRON TECHNICAL SERVICES
8 Cherry Tree Rd, Chinnor
Oxon OX9 4QY
Tel:- 01844-351694 Fax:- 01844-352554
Email:- enquiries@mauritron.co.uk

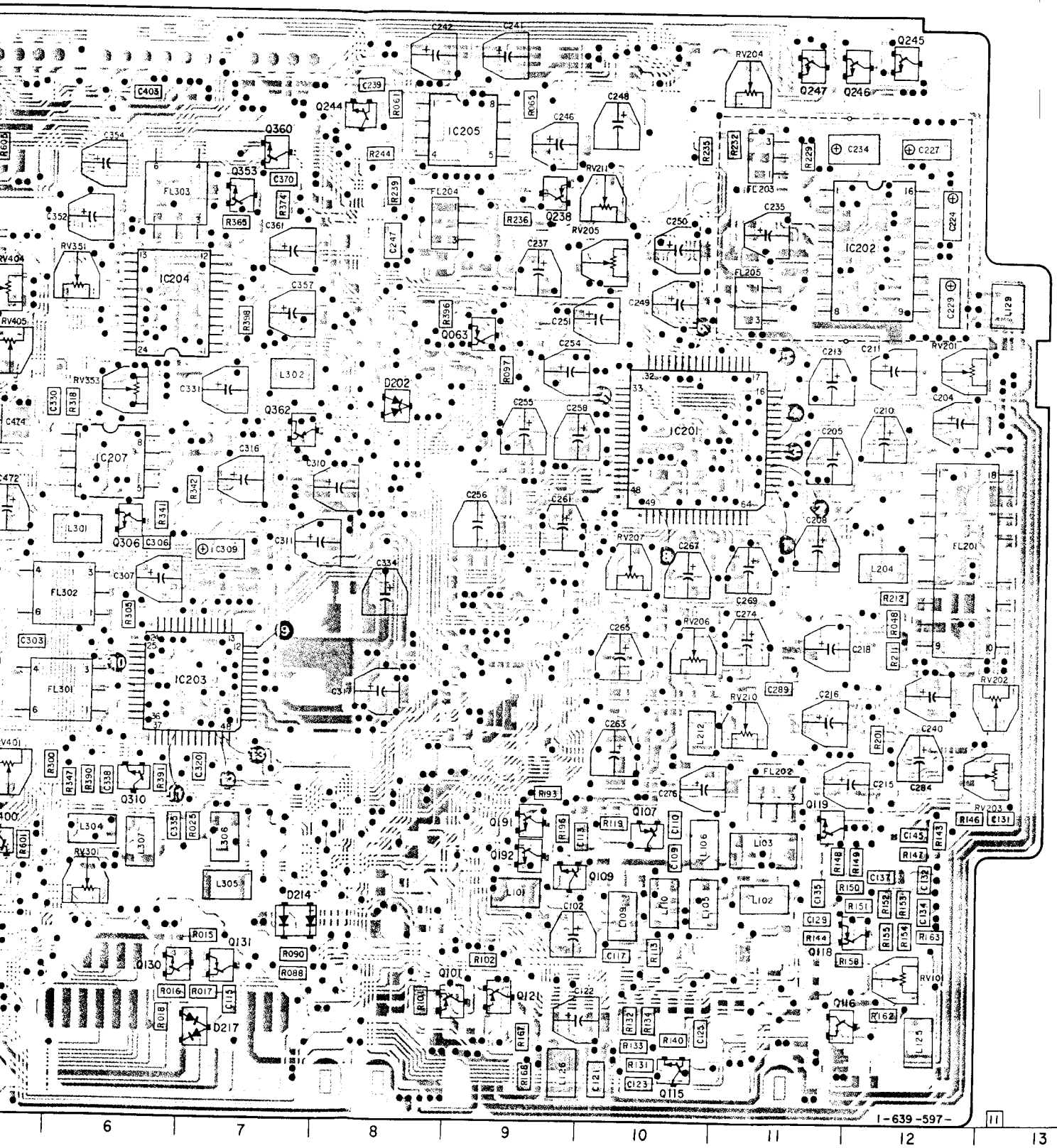

VA-70 BOARD (CONDUCTOR SIDE)

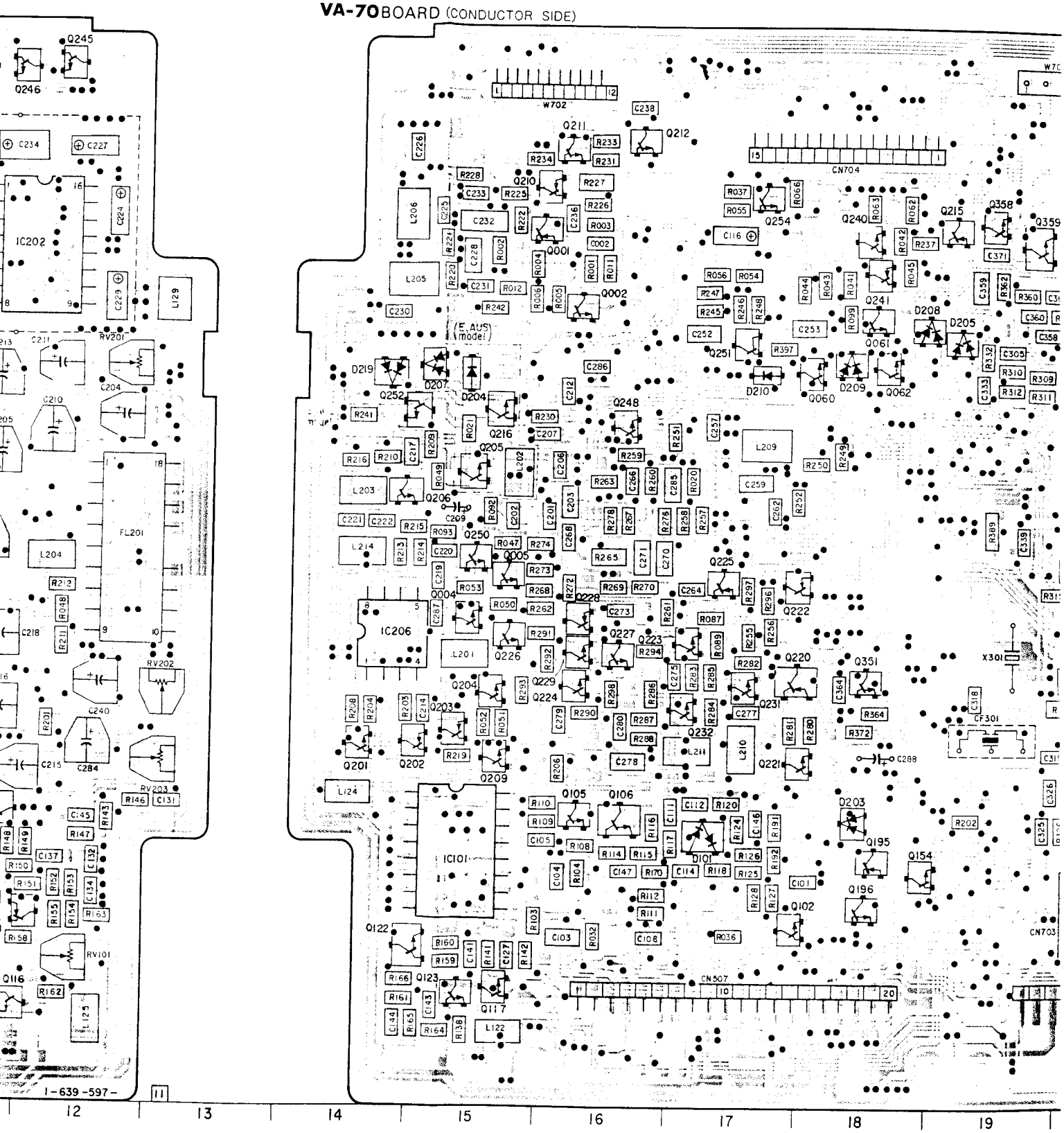

17 18 19 20 21 22 23 24 25

For Service Manuals Contact
MAURITRON TECHNICAL SERVICES
8 Cherry Tree Rd, Chinnor
Oxon OX9 4QY
Tel:- 01844-351694 Fax:- 01844-352554
Email:- enquiries@mauritron.co.uk

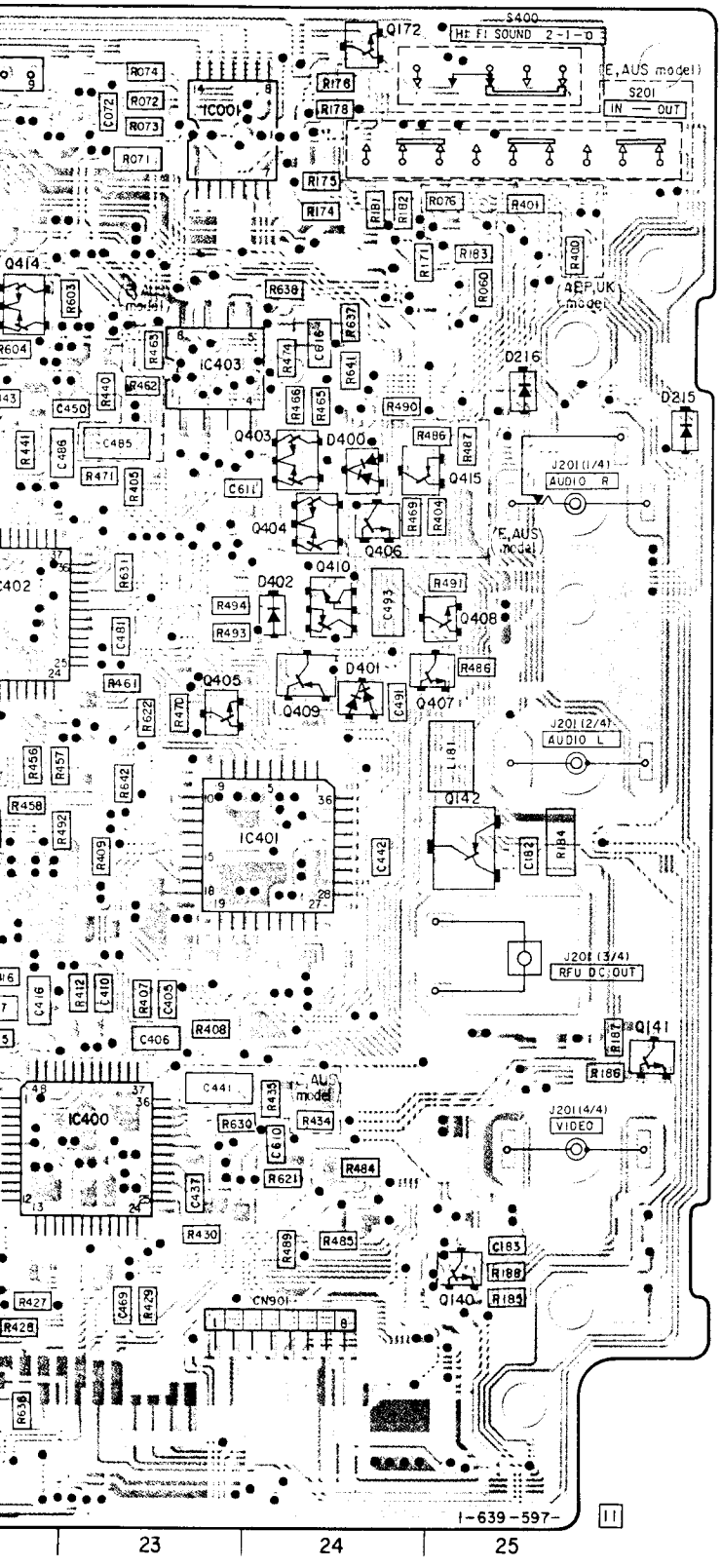

* A-7062-780-A VA-70P BOARD, COMPLETE (AEP/UK)
****
* A-7062-851-A VA-70PB BOARD, COMPLETE (AUS/E)
****
(Ref. No 1,000 Series)

< DIODE >

D101	8-719-800-76	DIODE	1SS226
D202	8-719-941-86	DIODE	DAN202U
D203	8-719-941-86	DIODE	DAN202U
D204	8-719-404-46	DIODE	MA110
D205	8-719-941-86	DIODE	DAN202U
D207	8-719-941-86	DIODE	DAN202U
D208	8-719-941-86	DIODE	DAN202U
D209	8-719-941-86	DIODE	DAN202U
D210	8-719-404-46	DIODE	MA110
D214	8-719-940-45	DIODE	MA159
D215	8-719-404-46	DIODE	MA110
D216	8-719-404-46	DIODE	MA110
D217	8-719-800-76	DIODE	1SS226
D219	8-719-941-86	DIODE	DAN202U
D351	8-719-404-46	DIODE	MA110
D400	8-719-941-86	DIODE	DAN202U
D401	8-719-941-86	DIODE	DAN202U
D402	8-719-404-46	DIODE	MA110

< IC >

IC001	8-759-999-02	IC	TL1596CDSB
IC101	8-759-012-00	IC	MC10H116M
IC201	8-752-036-19	IC	CXA1207R
IC202	8-752-333-24	IC	CXL1506M
IC203	8-752-036-20	IC	CXA1208R
IC204	8-759-605-61	IC	CXA1203N
IC205	8-759-710-29	IC	NJM2235M
IC206	8-759-320-76	IC	HA118070FPTR
IC207	8-759-711-71	IC	NJM2234M
IC400	8-759-823-19	IC	CXA-1488R
IC401	8-759-823-19	IC	CXA-1536Q
IC402	8-759-823-19	IC	CXA-1488R
IC403	8-759-603-27	IC	M5201FP
IC405	8-759-009-22	IC	MC14094BF

< TRANSISTOR >

Q001	8-729-905-23	TRANSISTOR	2SA1576
Q002	8-729-905-35	TRANSISTOR	2SC4081
Q004	8-729-905-35	TRANSISTOR	2SC4081
Q005	8-729-905-35	TRANSISTOR	2SC4081
Q060	8-729-905-18	TRANSISTOR	DTC144EU
Q061	8-729-905-18	TRANSISTOR	DTC144EU
Q062	8-729-905-18	TRANSISTOR	DTC144EU
Q063	8-729-905-12	TRANSISTOR	DTA144EU
Q101	8-729-905-23	TRANSISTOR	2SA1576
Q102	8-729-905-18	TRANSISTOR	DTC144EU
Q105	8-729-90		
Q106	8-729-10		
Q107	8-729-90		
Q109	8-729-90		
Q115	8-729-90		
Q116	8-729-90		
Q117	8-729-90		
Q118	8-729-90		
Q119	8-729-90		
Q121	8-729-14		
Q122	8-729-10		
Q123	8-729-90		
Q130	8-729-90		
Q131	8-729-90		
Q140	8-729-90		
Q141	8-729-90		
Q142	8-729-10		
Q154	8-729-90		
Q171	8-729-90		
Q172	8-729-90		
Q191	8-729-90		
Q192	8-729-90		
Q195	8-729-90		
Q196	8-729-90		
Q201	8-729-90		
Q202	8-729-90		
Q203	8-729-90		
Q204	8-729-90		
Q205	8-729-90		
Q206	8-729-90		
Q209	8-729-90		
Q210	8-729-90		
Q211	8-729-90		
Q212	8-729-90		
Q215	8-729-90		
Q216	8-729-90		
Q220	8-729-14		
Q221	8-729-90		
Q222	8-729-90		
Q223	8-729-90		
Q224	8-729-90		
Q225	8-729-90		
Q226	8-729-90		
Q227	8-729-90		
Q228	8-729-90		
Q229	8-729-90		
Q231	8-729-90		
Q232	8-729-90		
Q238	8-729-90		
Q240	8-729-90		

VA-70P BOARD, COMPLETE (AEP/UK)
****
VA-70PB BOARD, COMPLETE (AUS/E)
****
(Ref. No 1.000 Series)

< DIODE >

-800-76 DIODE 1SS226
-941-86 DIODE DAN202U
-941-86 DIODE DAN202U
-404-46 DIODE MA110
-941-86 DIODE DAN202U

-941-86 DIODE DAN202U
-941-86 DIODE DAN202U
-941-86 DIODE DAN202U
-404-46 DIODE MA110
-940-45 DIODE MA159

404-46 DIODE MA110
404-46 DIODE MA110
800-76 DIODE 1SS226
941-86 DIODE DAN202U
404-46 DIODE MA110

941-86 DIODE DAN202U
941-86 DIODE DAN202U
404-46 DIODE MA110

< IC >

999-02 IC TL1596CDSB
012-00 IC MC10H116M
036-19 IC CXA1207R
033-24 IC CXL1506M
036-20 IC CXA1208R

505-61 IC CXA1203N
710-29 IC NJM2235M
020-76 IC HA118070FPTR
711-71 IC NJM2234M
023-19 IC CXA-1488R

023-19 IC CXA-1536Q
023-19 IC CXA-1488R
503-27 IC M5201FP
009-22 IC MC14094BF

< TRANSISTOR >

005-23 TRANSISTOR 2SA1576
005-35 TRANSISTOR 2SC4081
005-35 TRANSISTOR 2SC4081
005-35 TRANSISTOR 2SC4081
005-18 TRANSISTOR DTC144EU

005-18 TRANSISTOR DTC144EU
005-18 TRANSISTOR DTC144EU
005-12 TRANSISTOR DTA144EU
005-23 TRANSISTOR 2SA1576
005-18 TRANSISTOR DTC144EU

Q105	8-729-905-35	TRANSISTOR	2SC4081
Q106	8-729-102-07	TRANSISTOR	2SC2223
Q107	8-729-905-12	TRANSISTOR	DTA144EU
Q109	8-729-905-35	TRANSISTOR	2SC4081
Q115	8-729-905-35	TRANSISTOR	2SC4081
Q116	8-729-905-18	TRANSISTOR	DTC144EU
Q117	8-729-905-35	TRANSISTOR	2SC4081
Q118	8-729-905-23	TRANSISTOR	2SA1576
Q119	8-729-905-35	TRANSISTOR	2SC4081
Q121	8-729-141-48	TRANSISTOR	2SB624T1-BV345
Q122	8-729-102-07	TRANSISTOR	2SC2223
Q123	8-729-905-35	TRANSISTOR	2SC4081
Q130	8-729-905-35	TRANSISTOR	2SC4081
Q131	8-729-905-23	TRANSISTOR	2SA1576
Q140	8-729-905-12	TRANSISTOR	DTA144EU
Q141	8-729-905-35	TRANSISTOR	2SC4081
Q142	8-729-101-07	TRANSISTOR	2SB798-DLDK
Q154	8-729-905-35	TRANSISTOR	2SC4081
Q171	8-729-905-35	TRANSISTOR	2SC4081
Q172	8-729-905-35	TRANSISTOR	2SC4081
Q191	8-729-905-35	TRANSISTOR	2SC4081
Q192	8-729-905-18	TRANSISTOR	DTC144EU
Q195	8-729-905-12	TRANSISTOR	DTA144EU
Q196	8-729-905-18	TRANSISTOR	DTC144EU
Q201	8-729-905-35	TRANSISTOR	2SC4081
Q202	8-729-905-12	TRANSISTOR	DTA144EU
Q203	8-729-905-23	TRANSISTOR	2SA1576
Q204	8-729-905-35	TRANSISTOR	2SC4081
Q205	8-729-905-18	TRANSISTOR	DTC144EU
Q206	8-729-905-35	TRANSISTOR	2SC4081
Q209	8-729-905-18	TRANSISTOR	DTC144EU
Q210	8-729-905-23	TRANSISTOR	2SA1576
Q211	8-729-905-35	TRANSISTOR	2SC4081
Q212	8-729-905-35	TRANSISTOR	2SC4081
Q215	8-729-905-23	TRANSISTOR	2SA1576
Q216	8-729-905-18	TRANSISTOR	DTC144EU
Q220	8-729-141-48	TRANSISTOR	2SB624T1-BV345
Q221	8-729-905-18	TRANSISTOR	DTC144EU
Q222	8-729-905-12	TRANSISTOR	DTA144EU
Q223	8-729-905-35	TRANSISTOR	2SC4081
Q224	8-729-905-35	TRANSISTOR	2SC4081
Q225	8-729-905-12	TRANSISTOR	DTA144EU
Q226	8-729-905-35	TRANSISTOR	2SC4081
Q227	8-729-905-35	TRANSISTOR	2SC4081
Q228	8-729-905-23	TRANSISTOR	2SA1576
Q229	8-729-905-35	TRANSISTOR	2SC4081
Q231	8-729-905-35	TRANSISTOR	2SC4081
Q232	8-729-905-35	TRANSISTOR	2SC4081
Q238	8-729-905-23	TRANSISTOR	2SA1576
Q240	8-729-905-35	TRANSISTOR	2SC4081
Q241	8-729-905-23	TRANSISTOR	2SA1576
Q244	8-729-905-18	TRANSISTOR	DTC144EU
Q245	8-729-905-XX	TRANSISTOR	DTC114TU
Q246	8-729-905-XX	TRANSISTOR	DTC114TU
Q247	8-729-905-XX	TRANSISTOR	DTC114TU
Q248	8-729-905-18	TRANSISTOR	DTC144EU
Q250	8-729-905-35	TRANSISTOR	2SC4081
Q251	8-729-905-18	TRANSISTOR	DTC144EU
Q252	8-729-905-18	TRANSISTOR	DTC144EU
Q254	8-729-905-35	TRANSISTOR	2SC4081
Q301	8-729-905-23	TRANSISTOR	2SA1576
Q303	8-729-905-35	TRANSISTOR	2SC4081
Q304	8-729-905-35	TRANSISTOR	2SC4081
Q306	8-729-905-35	TRANSISTOR	2SC4081
Q307	8-729-905-18	TRANSISTOR	DTC144EU
Q310	8-729-905-35	TRANSISTOR	2SC4081
Q311	8-729-905-35	TRANSISTOR	2SC4081
Q351	8-729-905-35	TRANSISTOR	2SC4081
Q352	8-729-905-35	TRANSISTOR	2SC4081
Q353	8-729-905-35	TRANSISTOR	2SC4081
Q354	8-729-905-35	TRANSISTOR	2SC4081
Q356	8-729-905-18	TRANSISTOR	DTC144EU
Q357	8-729-905-12	TRANSISTOR	DTA144EU
Q358	8-729-905-18	TRANSISTOR	DTC144EU
Q359	8-729-102-08	TRANSISTOR	2SC2223-F14
Q360	8-729-905-18	TRANSISTOR	DTC144EU
Q362	8-729-905-18	TRANSISTOR	DTC144EU
Q400	8-729-905-18	TRANSISTOR	DTC144EU
Q401	8-729-905-18	TRANSISTOR	DTC144EU
Q402	8-729-905-35	TRANSISTOR	2SC4081
Q403	8-729-904-07	TRANSISTOR	FMG2
Q404	8-729-904-07	TRANSISTOR	FMG2
Q405	8-729-905-18	TRANSISTOR	DTC144EU
Q406	8-729-905-18	TRANSISTOR	DTC144EU
Q407	8-729-905-XX	TRANSISTOR	DTC114TU
Q408	8-729-905-XX	TRANSISTOR	DTC114TU
Q409	8-729-216-22	TRANSISTOR	2SA1162
Q410	8-729-907-39	TRANSISTOR	IMD2T
Q412	8-729-402-81	TRANSISTOR	XN4501
Q413	8-729-905-18	TRANSISTOR	DTC144EU
Q414	8-729-904-07	TRANSISTOR	FMG2
Q415	8-729-905-23	TRANSISTOR	2SA1576R

For Service Manuals Contact
MAURITRON TECHNICAL SERVICES
8 Cherry Tree Rd, Chinnor
Oxon OX9 4QY
Tel:- 01844-351694 Fax:- 01844-352554
Email:- enquiries@mauritron.co.uk

* A-7062-780-A VA-70P BOARD, COMPLETE (AEP/UK)
****
* A-7062-851-A VA-70PB BOARD, COMPLETE (AUS/E)
****
(Ref. No 1,000 Series)

< DIODE >

D101	8-719-800-76	DIODE	1SS226
D202	8-719-941-86	DIODE	DAN202U
D203	8-719-941-86	DIODE	DAN202U
D204	8-719-404-46	DIODE	MA110
D205	8-719-941-86	DIODE	DAN202U
D207	8-719-941-86	DIODE	DAN202U
D208	8-719-941-86	DIODE	DAN202U
D209	8-719-941-86	DIODE	DAN202U
D210	8-719-404-46	DIODE	MA110
D214	8-719-940-45	DIODE	MA159
D215	8-719-404-46	DIODE	MA110
D216	8-719-404-46	DIODE	MA110
D217	8-719-800-76	DIODE	1SS226
D219	8-719-941-86	DIODE	DAN202U
D351	8-719-404-46	DIODE	MA110
D400	8-719-941-86	DIODE	DAN202U
D401	8-719-941-86	DIODE	DAN202U
D402	8-719-404-46	DIODE	MA110

< IC >

IC001	8-759-999-02	IC	TL1596CDSB
IC101	8-759-012-00	IC	MC10H116M
IC201	8-752-036-19	IC	CXA1207R
IC202	8-752-333-24	IC	CXL1506M
IC203	8-752-036-20	IC	CXA1208R
IC204	8-759-605-61	IC	CXA1203N
IC205	8-759-710-29	IC	NJM2235M
IC206	8-759-320-76	IC	HA118070FPTR
IC207	8-759-711-71	IC	NJM2234M
IC400	8-759-823-19	IC	CXA-1488R
IC401	8-759-823-19	IC	CXA-1536Q
IC402	8-759-823-19	IC	CXA-1488R
IC403	8-759-603-27	IC	M5201FP
IC405	8-759-009-22	IC	MC14094BF

< TRANSISTOR >

Q001	8-729-905-23	TRANSISTOR	2SA1576
Q002	8-729-905-35	TRANSISTOR	2SC4081
Q004	8-729-905-35	TRANSISTOR	2SC4081
Q005	8-729-905-35	TRANSISTOR	2SC4081
Q060	8-729-905-18	TRANSISTOR	DTC144EU
Q061	8-729-905-18	TRANSISTOR	DTC144EU
Q062	8-729-905-18	TRANSISTOR	DTC144EU
Q063	8-729-905-12	TRANSISTOR	DTA144EU
Q101	8-729-905-23	TRANSISTOR	2SA1576
Q102	8-729-905-18	TRANSISTOR	DTC144EU
Q105	8-729-905-35	TRANSISTOR	2SC4081
Q106	8-729-102-07	TRANSISTOR	2SC2223
Q107	8-729-905-12	TRANSISTOR	DTA144EU
Q109	8-729-905-35	TRANSISTOR	2SC4081
Q115	8-729-905-35	TRANSISTOR	2SC4081
Q116	8-729-905-18	TRANSISTOR	DTC144EU
Q117	8-729-905-35	TRANSISTOR	2SC4081
Q118	8-729-905-23	TRANSISTOR	2SA1576
Q119	8-729-905-35	TRANSISTOR	2SC4081
Q121	8-729-141-48	TRANSISTOR	2SB624T1-BV345
Q122	8-729-102-07	TRANSISTOR	2SC2223
Q123	8-729-905-35	TRANSISTOR	2SC4081
Q130	8-729-905-35	TRANSISTOR	2SC4081
Q131	8-729-905-23	TRANSISTOR	2SA1576
Q140	8-729-905-12	TRANSISTOR	DTA144EU
Q141	8-729-905-35	TRANSISTOR	2SC4081
Q142	8-729-101-07	TRANSISTOR	2SB798-DLDK
Q154	8-729-905-35	TRANSISTOR	2SC4081
Q171	8-729-905-35	TRANSISTOR	2SC4081
Q172	8-729-905-35	TRANSISTOR	2SC4081
Q191	8-729-905-35	TRANSISTOR	2SC4081
Q192	8-729-905-18	TRANSISTOR	DTC144EU
Q195	8-729-905-12	TRANSISTOR	DTA144EU
Q196	8-729-905-18	TRANSISTOR	DTC144EU
Q201	8-729-905-35	TRANSISTOR	2SC4081
Q202	8-729-905-12	TRANSISTOR	DTA144EU
Q203	8-729-905-23	TRANSISTOR	2SA1576
Q204	8-729-905-35	TRANSISTOR	2SC4081
Q205	8-729-905-18	TRANSISTOR	DTC144EU
Q206	8-729-905-35	TRANSISTOR	2SC4081
Q209	8-729-905-18	TRANSISTOR	DTC144EU
Q210	8-729-905-23	TRANSISTOR	2SA1576
Q211	8-729-905-35	TRANSISTOR	2SC4081
Q212	8-729-905-35	TRANSISTOR	2SC4081
Q215	8-729-905-23	TRANSISTOR	2SA1576
Q216	8-729-905-18	TRANSISTOR	DTC144EU
Q220	8-729-141-48	TRANSISTOR	2SB624T1-BV345
Q221	8-729-905-18	TRANSISTOR	DTC144EU
Q222	8-729-905-12	TRANSISTOR	DTA144EU
Q223	8-729-905-35	TRANSISTOR	2SC4081
Q224	8-729-905-35	TRANSISTOR	2SC4081
Q225	8-729-905-12	TRANSISTOR	DTA144EU
Q226	8-729-905-35	TRANSISTOR	2SC4081
Q227	8-729-905-35	TRANSISTOR	2SC4081
Q228	8-729-905-23	TRANSISTOR	2SA1576
Q229	8-729-905-35	TRANSISTOR	2SC4081
Q231	8-729-905-35	TRANSISTOR	2SC4081
Q232	8-729-905-35	TRANSISTOR	2SC4081
Q238	8-729-905-23	TRANSISTOR	2SA1576
Q240	8-729-905-35	TRANSISTOR	2SC4081
Q241	8-729-905-23	TRANSISTOR	
Q244	8-729-905-18	TRANSISTOR	
Q245	8-729-905-XX	TRANSISTOR	
Q246	8-729-905-XX	TRANSISTOR	
Q247	8-729-905-XX	TRANSISTOR	
Q248	8-729-905-18	TRANSISTOR	
Q250	8-729-905-35	TRANSISTOR	
Q251	8-729-905-18	TRANSISTOR	
Q252	8-729-905-18	TRANSISTOR	
Q254	8-729-905-35	TRANSISTOR	
Q301	8-729-905-23	TRANSISTOR	
Q303	8-729-905-35	TRANSISTOR	
Q304	8-729-905-35	TRANSISTOR	
Q306	8-729-905-35	TRANSISTOR	
Q307	8-729-905-18	TRANSISTOR	
Q310	8-729-905-35	TRANSISTOR	
Q311	8-729-905-35	TRANSISTOR	
Q351	8-729-905-35	TRANSISTOR	
Q352	8-729-905-35	TRANSISTOR	
Q353	8-729-905-35	TRANSISTOR	
Q354	8-729-905-35	TRANSISTOR	
Q356	8-729-905-18	TRANSISTOR	
Q357	8-729-905-12	TRANSISTOR	
Q358	8-729-905-18	TRANSISTOR	
Q359	8-729-102-08	TRANSISTOR	
Q360	8-729-905-18	TRANSISTOR	
Q362	8-729-905-18	TRANSISTOR	
Q400	8-729-905-18	TRANSISTOR	
Q401	8-729-905-18	TRANSISTOR	
Q402	8-729-905-35	TRANSISTOR	
Q403	8-729-904-07	TRANSISTOR	
Q404	8-729-904-07	TRANSISTOR	
Q405	8-729-905-18	TRANSISTOR	
Q406	8-729-905-18	TRANSISTOR	
Q407	8-729-905-XX	TRANSISTOR	
Q408	8-729-905-XX	TRANSISTOR	
Q409	8-729-216-22	TRANSISTOR	
Q410	8-729-907-39	TRANSISTOR	
Q412	8-729-402-81	TRANSISTOR	
Q413	8-729-905-18	TRANSISTOR	
Q414	8-729-904-07	TRANSISTOR	
Q415	8-729-905-23	TRANSISTOR	

For Service Manuals Contact
MAURITRON TECHNICAL SERVICES
8 Cherry Tree Rd, Chinnor
Oxon OX9 4QY
Tel:- 01844-351694 Fax:- 01844-352554
Email:- enquiries@mauritron.co.uk

VA-70 (VIDEO PROCESS, AUDIO PROCESS) PRINTED WIRING BOARD

— Ref. No. VA-70 BOARD: 1000 series —

For Service Manuals Contact
MAURITRON TECHNICAL SERVICES
8 Cherry Tree Rd, Chinnor
Oxon OX9 4QY
Tel:- 01844-351694 Fax:- 01844-352554
Email:- enquiries@mauritron.co.uk

	Q241	8-729-905-23 TRANSISTOR	2SA1576
	Q244	8-729-905-18 TRANSISTOR	DTC144EU
	Q245	8-729-905-XX TRANSISTOR	DTC114TU
	Q246	8-729-905-XX TRANSISTOR	DTC114TU
	Q247	8-729-905-XX TRANSISTOR	DTC114TU
	Q248	8-729-905-18 TRANSISTOR	DTC144EU
	Q250	8-729-905-35 TRANSISTOR	2SC4081
	Q251	8-729-905-18 TRANSISTOR	DTC144EU
	Q252	8-729-905-18 TRANSISTOR	DTC144EU
V345	Q254	8-729-905-35 TRANSISTOR	2SC4081
	Q301	8-729-905-23 TRANSISTOR	2SA1576
	Q303	8-729-905-35 TRANSISTOR	2SC4081
	Q304	8-729-905-35 TRANSISTOR	2SC4081
	Q306	8-729-905-35 TRANSISTOR	2SC4081
	Q307	8-729-905-18 TRANSISTOR	DTC144EU
	Q310	8-729-905-35 TRANSISTOR	2SC4081
X	Q311	8-729-905-35 TRANSISTOR	2SC4081
	Q351	8-729-905-35 TRANSISTOR	2SC4081
	Q352	8-729-905-35 TRANSISTOR	2SC4081
	Q353	8-729-905-35 TRANSISTOR	2SC4081
	Q354	8-729-905-35 TRANSISTOR	2SC4081
	Q356	8-729-905-18 TRANSISTOR	DTC144EU
	Q357	8-729-905-12 TRANSISTOR	DTA144EU
	Q358	8-729-905-18 TRANSISTOR	DTC144EU
	Q359	8-729-102-08 TRANSISTOR	2SC2223-F14
	Q360	8-729-905-18 TRANSISTOR	DTC144EU
	Q362	8-729-905-18 TRANSISTOR	DTC144EU
	Q400	8-729-905-18 TRANSISTOR	DTC144EU
	Q401	8-729-905-18 TRANSISTOR	DTC144EU
	Q402	8-729-905-35 TRANSISTOR	2SC4081
	Q403	8-729-904-07 TRANSISTOR	FMG2
	Q404	8-729-904-07 TRANSISTOR	FMG2
	Q405	8-729-905-18 TRANSISTOR	DTC144EU
	Q406	8-729-905-18 TRANSISTOR	DTC144EU
	Q407	8-729-905-XX TRANSISTOR	DTC114TU
	Q408	8-729-905-XX TRANSISTOR	DTC114TU
345	Q409	8-729-216-22 TRANSISTOR	2SA1162
	Q410	8-729-907-39 TRANSISTOR	IMD2T
	Q412	8-729-402-81 TRANSISTOR	XN4501
	Q413	8-729-905-18 TRANSISTOR	DTC144EU
	Q414	8-729-904-07 TRANSISTOR	FMG2
	Q415	8-729-905-23 TRANSISTOR	2SA1576R

VA-70 BOARD (COMPONENT SIDE)

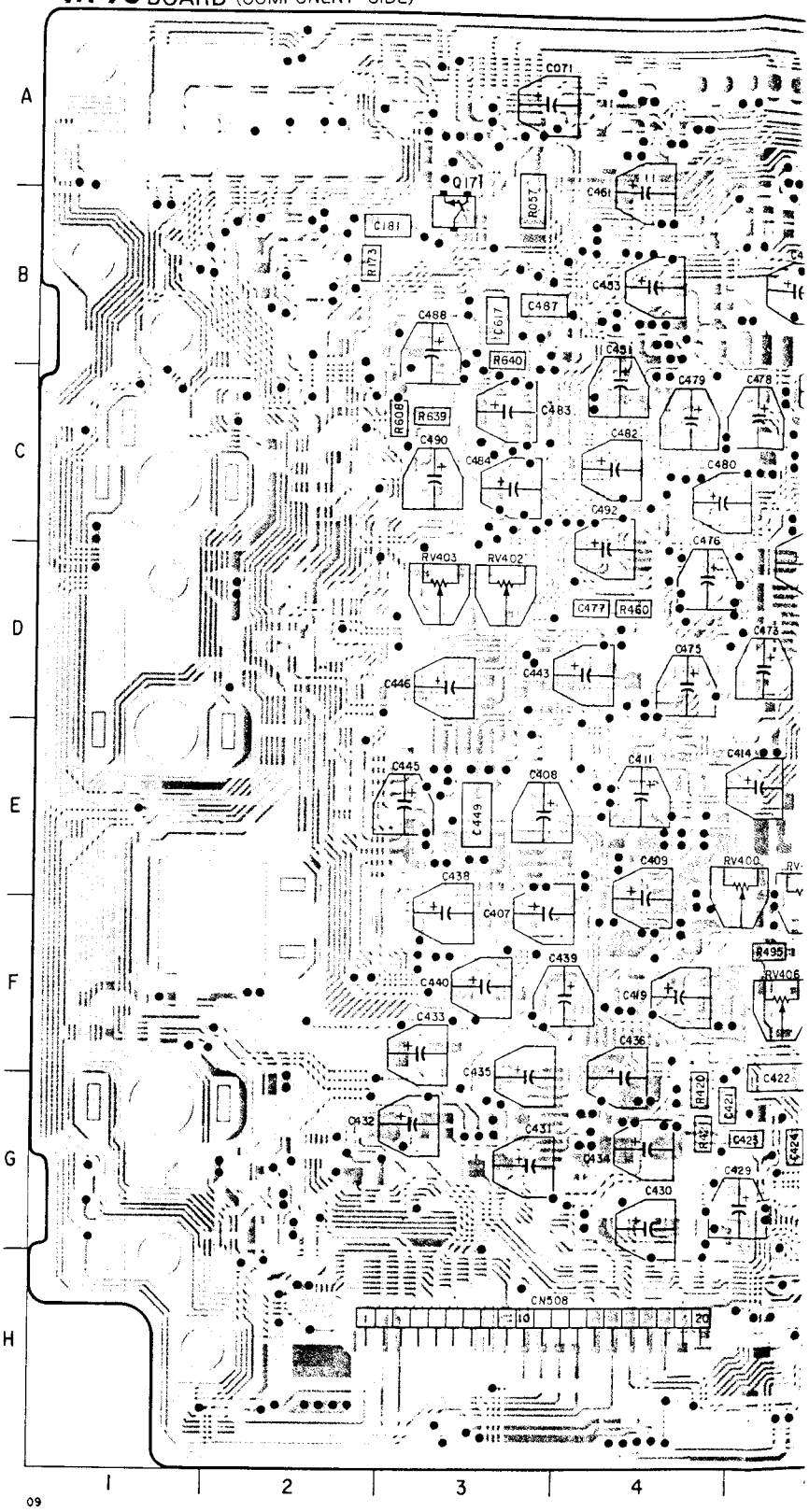

D PROCESS) PRINTED WIRING BOARD

SIDE)

AUDIO AUDIO

VA-70 BOARD (CONDUCTOR SIDE)

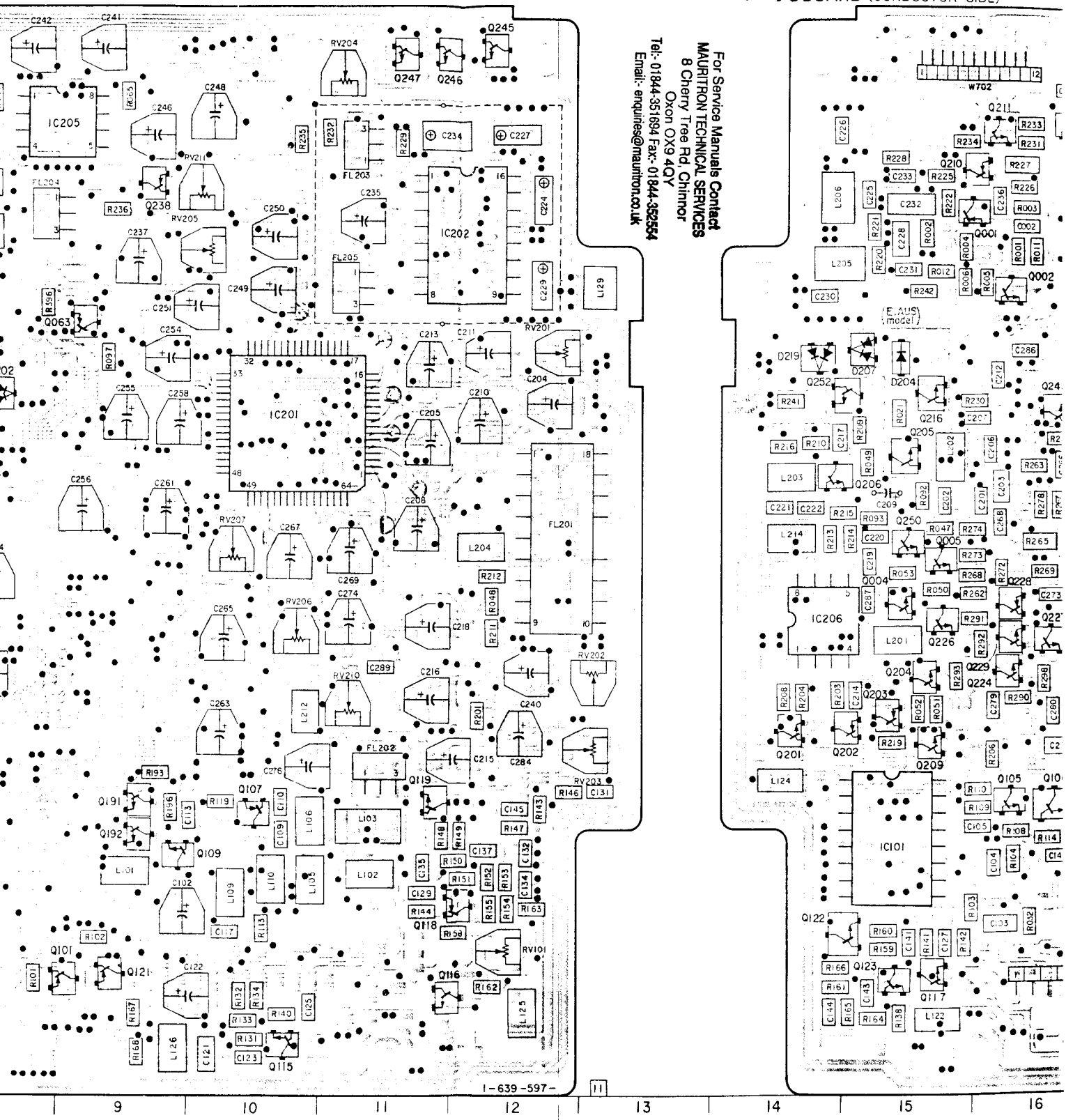

For Service Manuals Contact
MAURITRON TECHNICAL SERVICES
8 Cherry Tree Rd, Chinnor
Oxon OX9 4QY
Tel:- 01844-351694 Fax:- 01844-352554
Email:- enquiries@mauritron.co.uk

VA-70BOARD (CONDUCTOR SIDE)

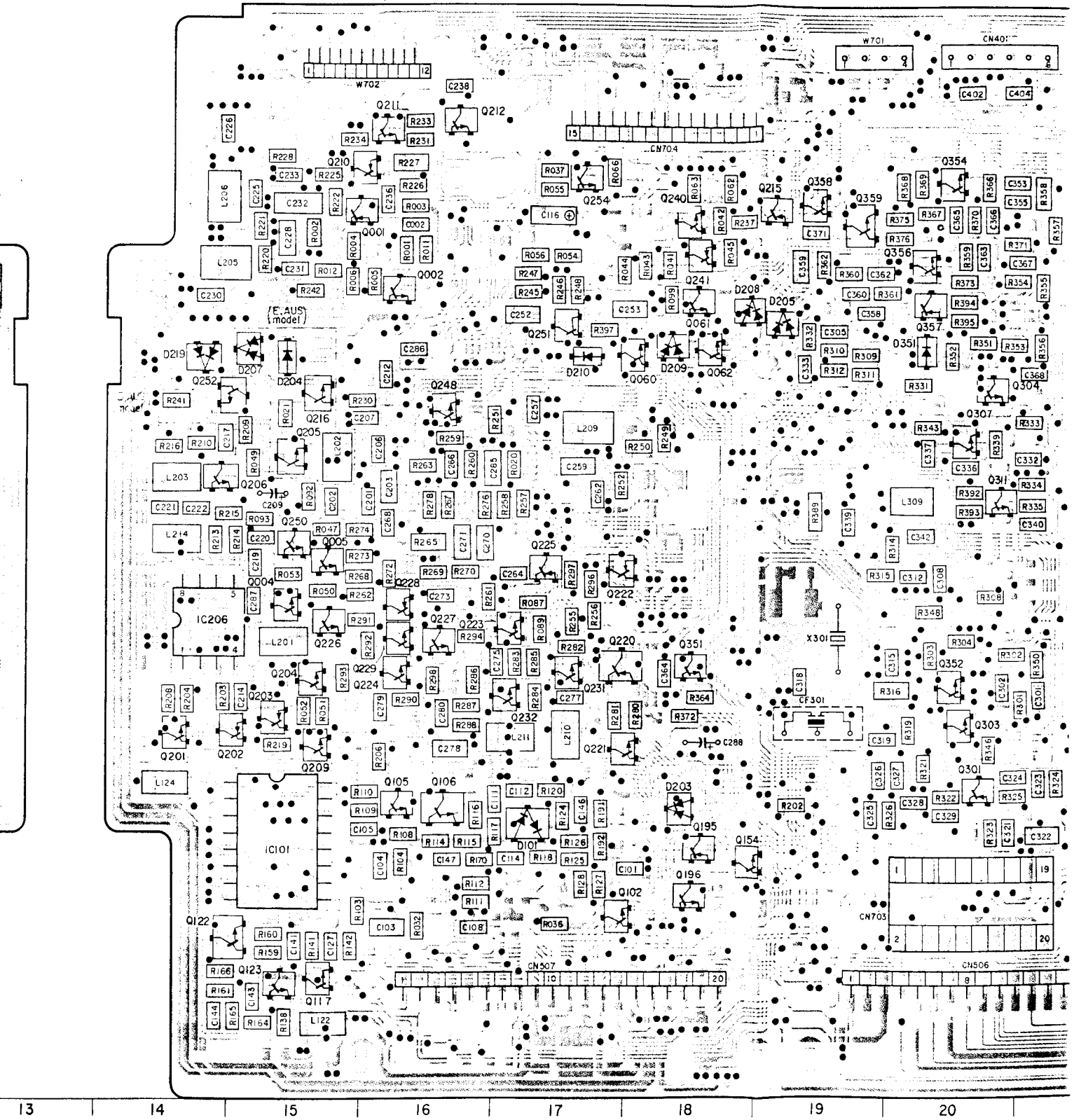

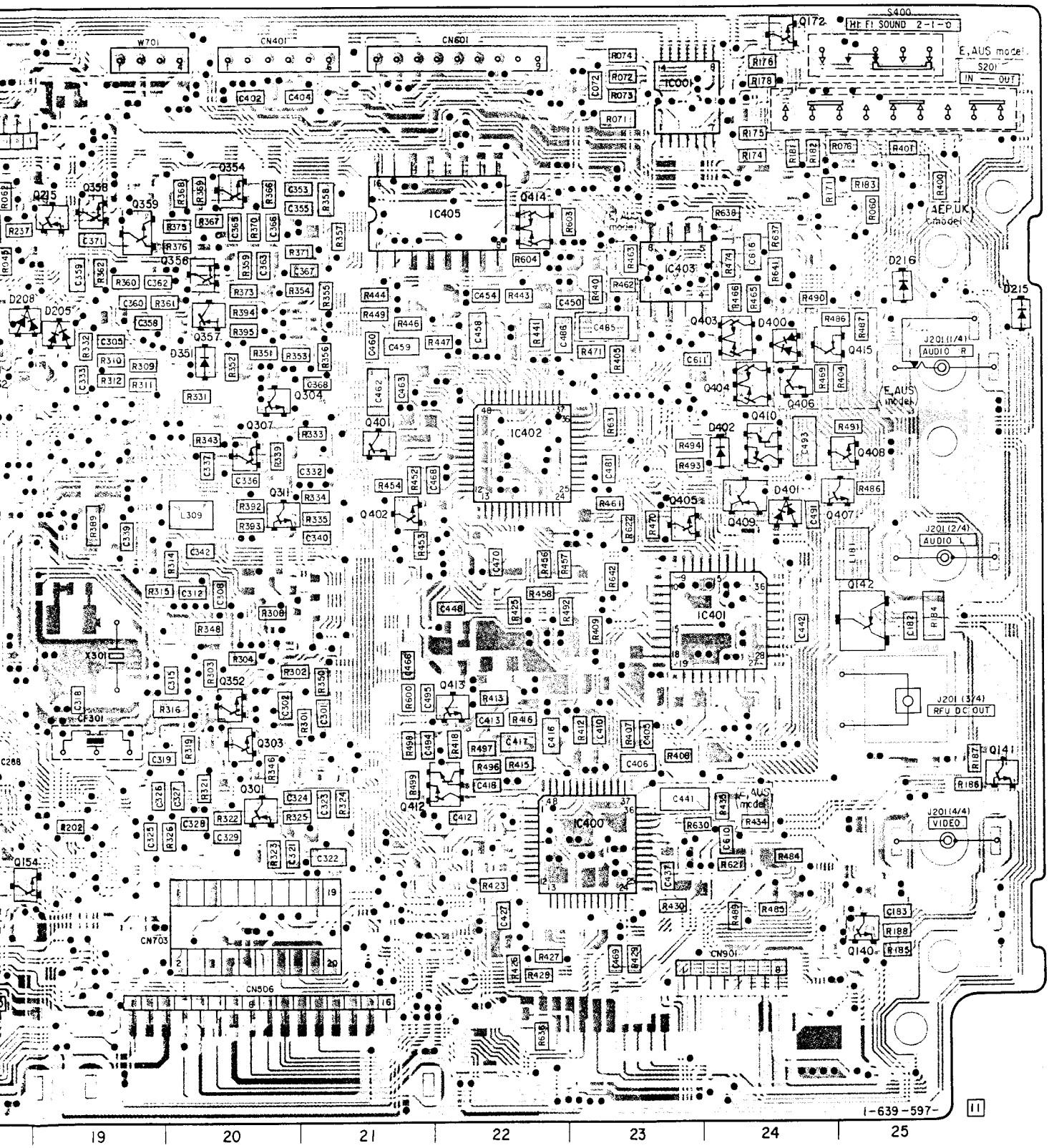

For Service Manuals Contact
MAURITRON TECHNICAL SERVICES
8 Cherry Tree Rd, Chinnor
Oxon OX9 4QY
Tel:- 01844-351694 Fax:- 01844-352554
Email:- enquiries@mauritron.co.uk

VA-70 (2/2) (AUDIO PROCESS) SCHEMATIC DIAGRAM

For Service Manuals Contact
MAURITRON TECHNICAL SERVICES
8 Cherry Tree Rd, Chinnor
Oxon OX9 4QY
Tel:- 01844-351694 Fax:- 01844-352554
Email:- enquiries@mauritron.co.uk

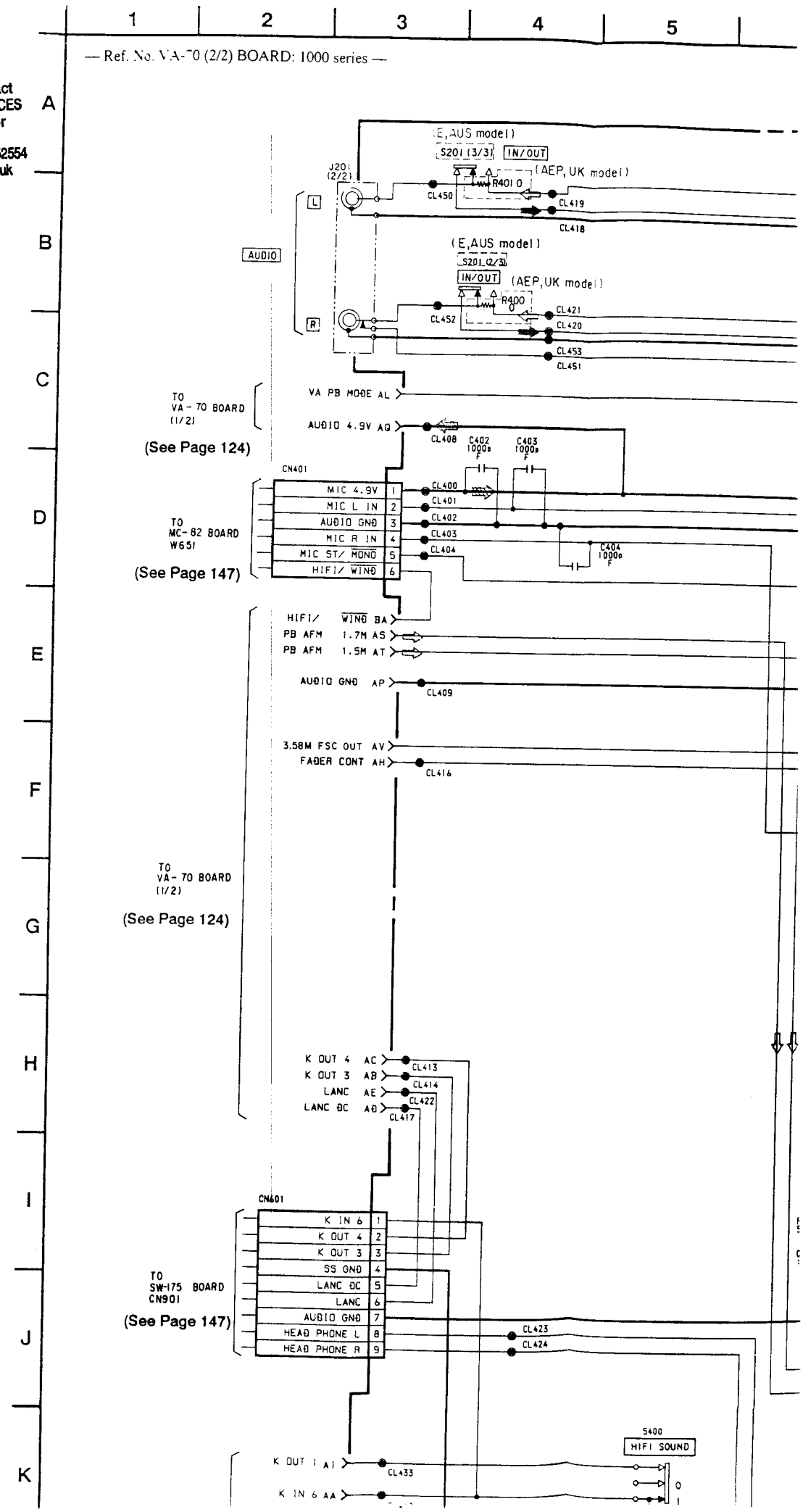

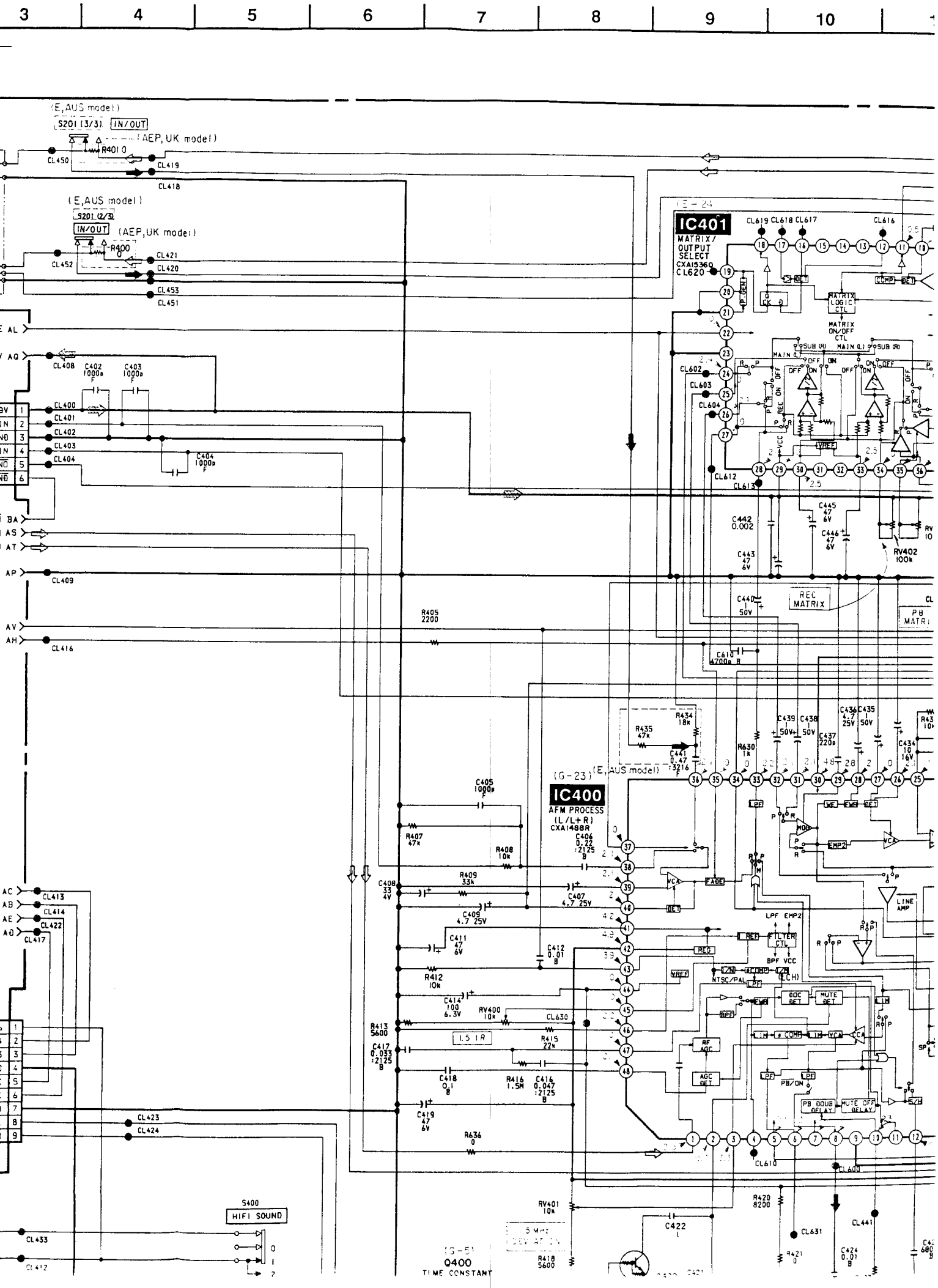
3
4
5
6
7
8
9
10
(E,AUS model)
S201 (3/3) IN/OUT
(AEP,UK model)
R401 0
CL450
CL419
CL418
(E,AUS model)
S201 (2/3)
IN/OUT
(AEP,UK model)
R400 0
CL452
CL421
CL420
CL453
CL451
IC401
MATRIX/ OUTPUT SELECT
CXA1536Q
CL620
CL619 CL618 CL617
CL616
MATRIX LOGIC CTL
MATRIX ON/OFF CTL
CL602
CL603
CL604
CL612
CL613
C442 0.002
C445 47 6V
C446 47 6V
C443 47 6V
RV402 100k
C440 1 50V
REC MATRIX
PB MATRI
CL408
C402 1000p F
C403 1000p F
CL400
CL401
CL402
CL403
CL404
C404 1000p F
CL409
CL416
R405 2200
C610 4700p B
IC400
AFM PROCESS
(L/L+R)
CXA1488R
(G-23)
(E,AUS model)
R435 47k
R434 18k
C441 0.47 :3216 F
R630 1k
C439 1 50V
C438 1 50V
C437 220p
C436 4.7 25V
C435 1 50V
C434 10 16V
R631 10k
C405 1000p F
R407 47k
R408 10k
C406 0.22 :2125 B
C408 33 4V
R409 33k
C407 4.7 25V
C409 4.7 25V
C411 47 6V
C412 0.01 B
R412 10k
C414 100 6.3V
RV400 10k
CL630
R413 5600
C417 0.033 :2125 B
1.5 I.R
R415 22k
C418 0.1 B
R416 1.5M
C416 0.047 :2125 B
C419 47 6V
R636 0
CL413
CL414
CL422
CL417
CL423
CL424
CL433
CL412
S400
HIFI SOUND
RV401 10k
R418 5600
(G-5)
Q400
TIME CONSTANT
C422 1
R420 8200
CL631
CL441
R421 0
C424 0.01 B
CL610
CL400
LPF
EMP2
VCA
FADE
LINE AMP
FILTER CTL
REF
REG
VREF
BPF VCC
NTSC/PAL
DOC DET
MUTE DET
AF AGC
AGC DET
PB/ON
PB DOUB DELAY
MUTE OFF DELAY
SP

For Service Manuals Contact
MAURITRON TECHNICAL SERVICES
8 Cherry Tree Rd, Chinnor
Oxon OX9 4QY
Tel:- 01844-351694 Fax:- 01844-352554
Email:- enquiries@mauritron.co.uk

MC-82 BOARD (CONDUCTOR SIDE)

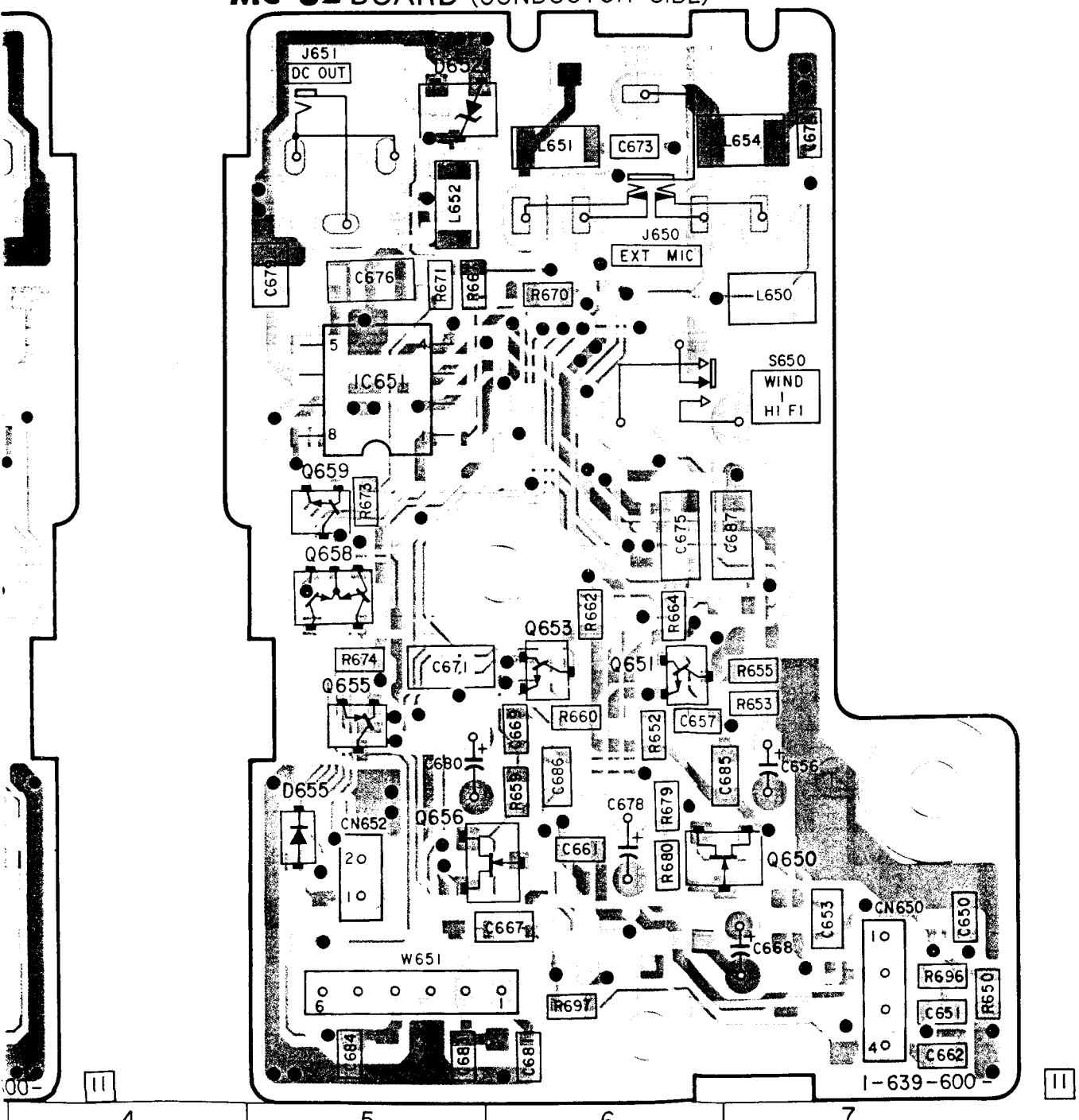

4 5 6 7

* A-7071-428-A SW-175P BOARD, COMPLETE
****
(Ref. No 2,000 Series)

< DIODE >

D900	8-719-977-34 DIODE	DTZ12
D901	8-719-977-34 DIODE	DTZ12
D902	8-719-404-46 DIODE	MA110
D903	8-719-977-34 DIODE	D
D904	8-719-977-34 DIODE	D
D905	8-719-404-46 DIODE	M
D906	8-719-404-46 DIODE	M
D907	8-719-404-46 DIODE	M
D908	8-719-976-97 DIODE	D

SW-175 BOARD
(COMPONENT SIDE)

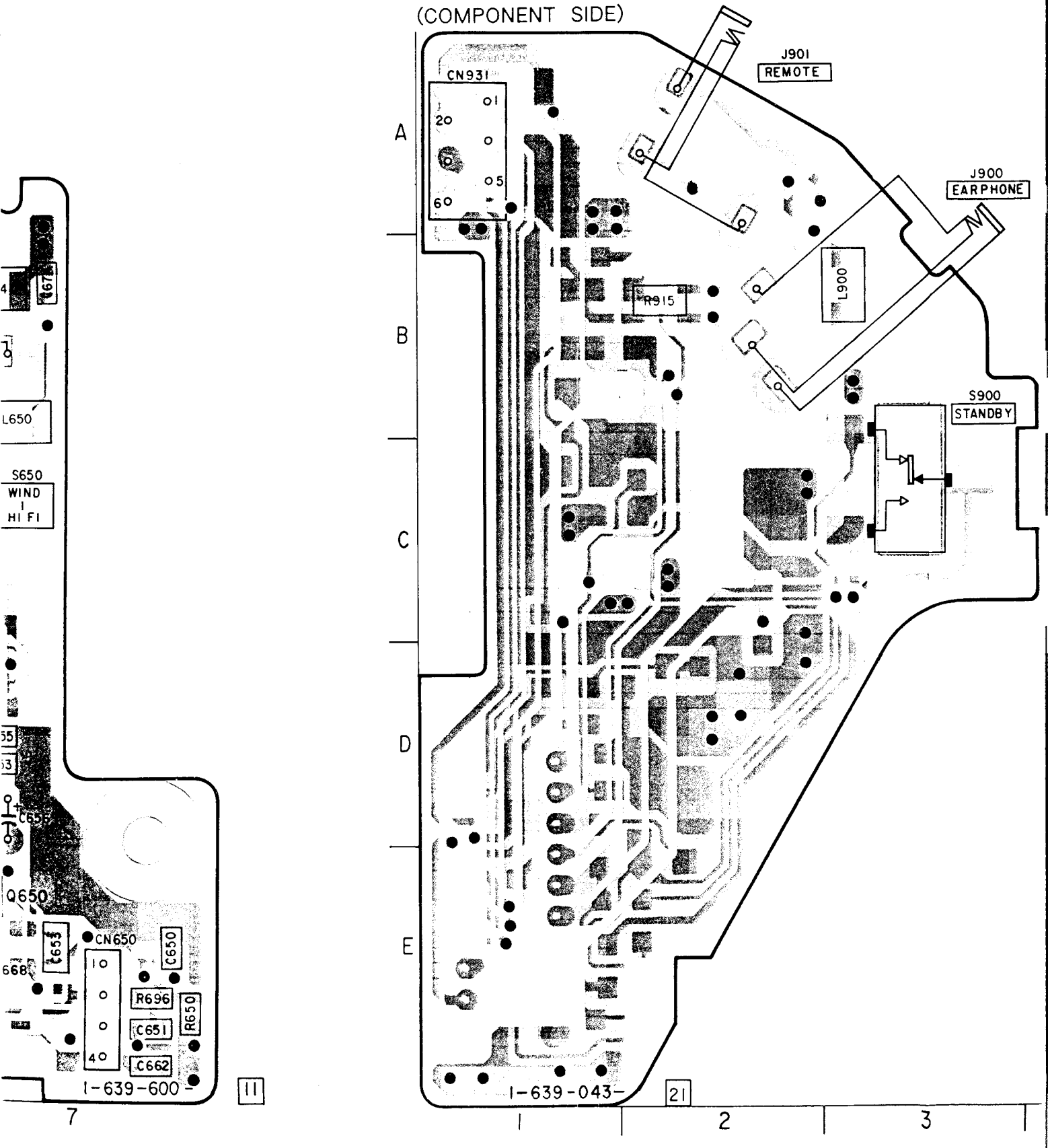

AUDIO AUDIO

-719-977-34 DIODE DTZ12
-719-977-34 DIODE DTZ12

-719-404-46 DIODE MA110
-719-404-46 DIODE MA110
-719-404-46 DIODE MA110
-719-976-97 DIODE DTZ5.1

< TRANSISTOR >

Q900 8-729-901-01 TRANSISTOR DTC144EK
Q901 8-729-902-XX TRANSISTOR DTC114TK

SW-175 BOARD (CONDUCTOR SIDE)

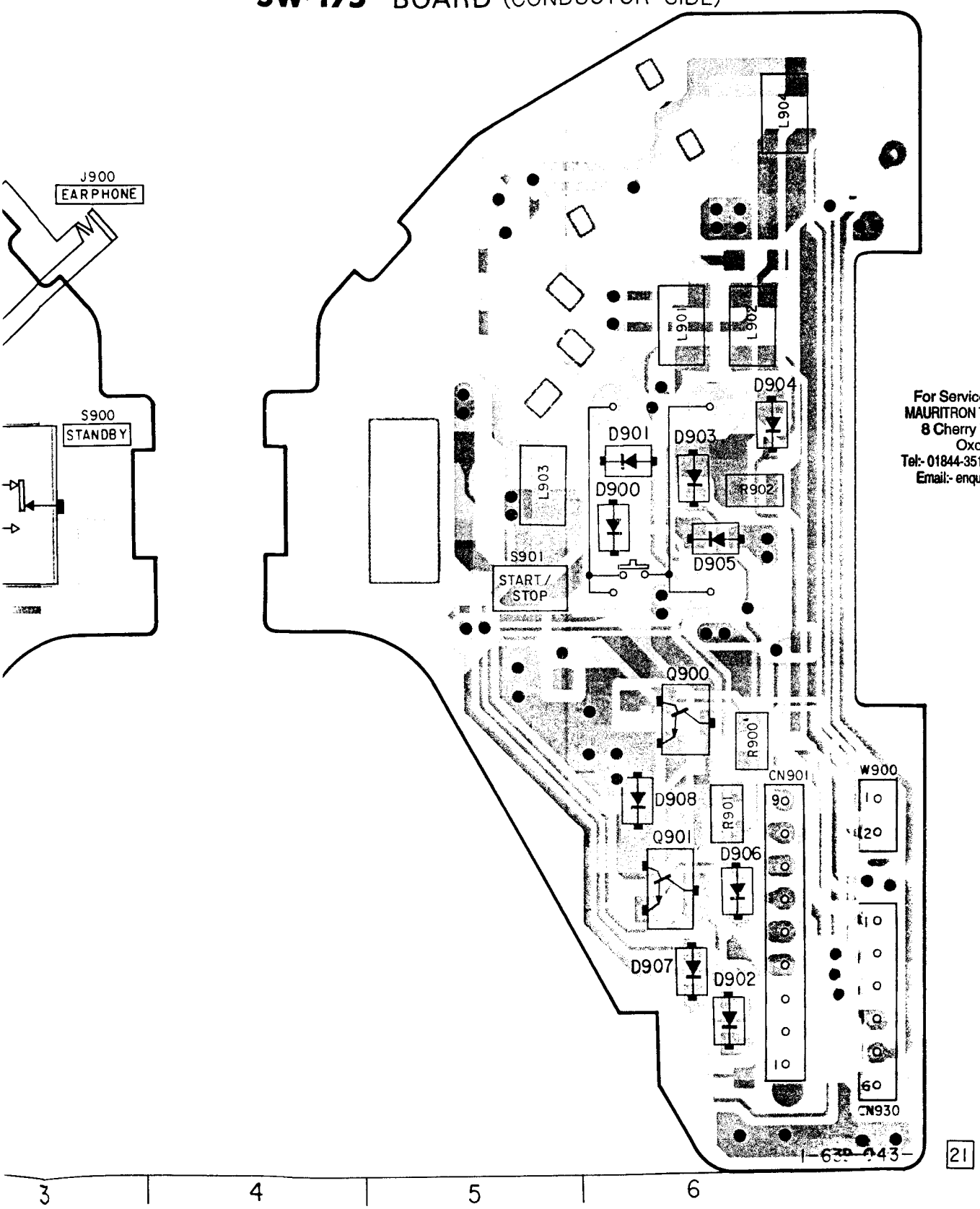

3 4 5 6

For Service Manuals Contact
MAURITRON TECHNICAL SERVICES
8 Cherry Tree Rd, Chinnor
Oxon OX9 4QY
Tel:- 01844-351694 Fax:- 01844-352554
Email:- enquiries@mauritron.co.uk

— Ref. No. MC-82 BOARD: 2000 series, SW-175 BOARD: 2000 series —

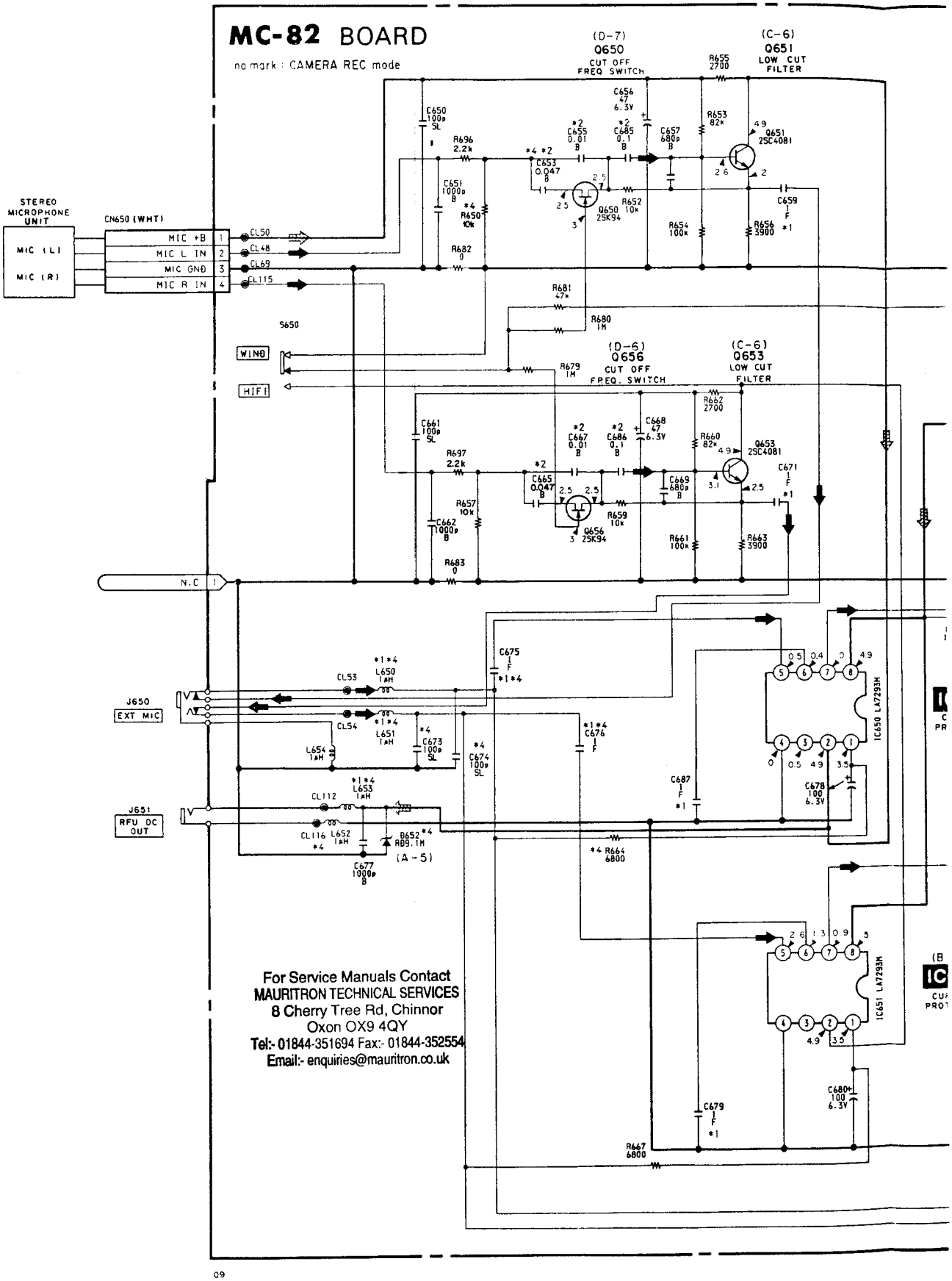

For Service Manuals Contact
MAURITRON TECHNICAL SERVICES
8 Cherry Tree Rd, Chinnor
Oxon OX9 4QY
Tel:- 01844-351694 Fax:- 01844-352554
Email:- enquiries@mauritron.co.uk

09

5 | 6 | 7 | 8 | 9 | 10 | 11 | 12

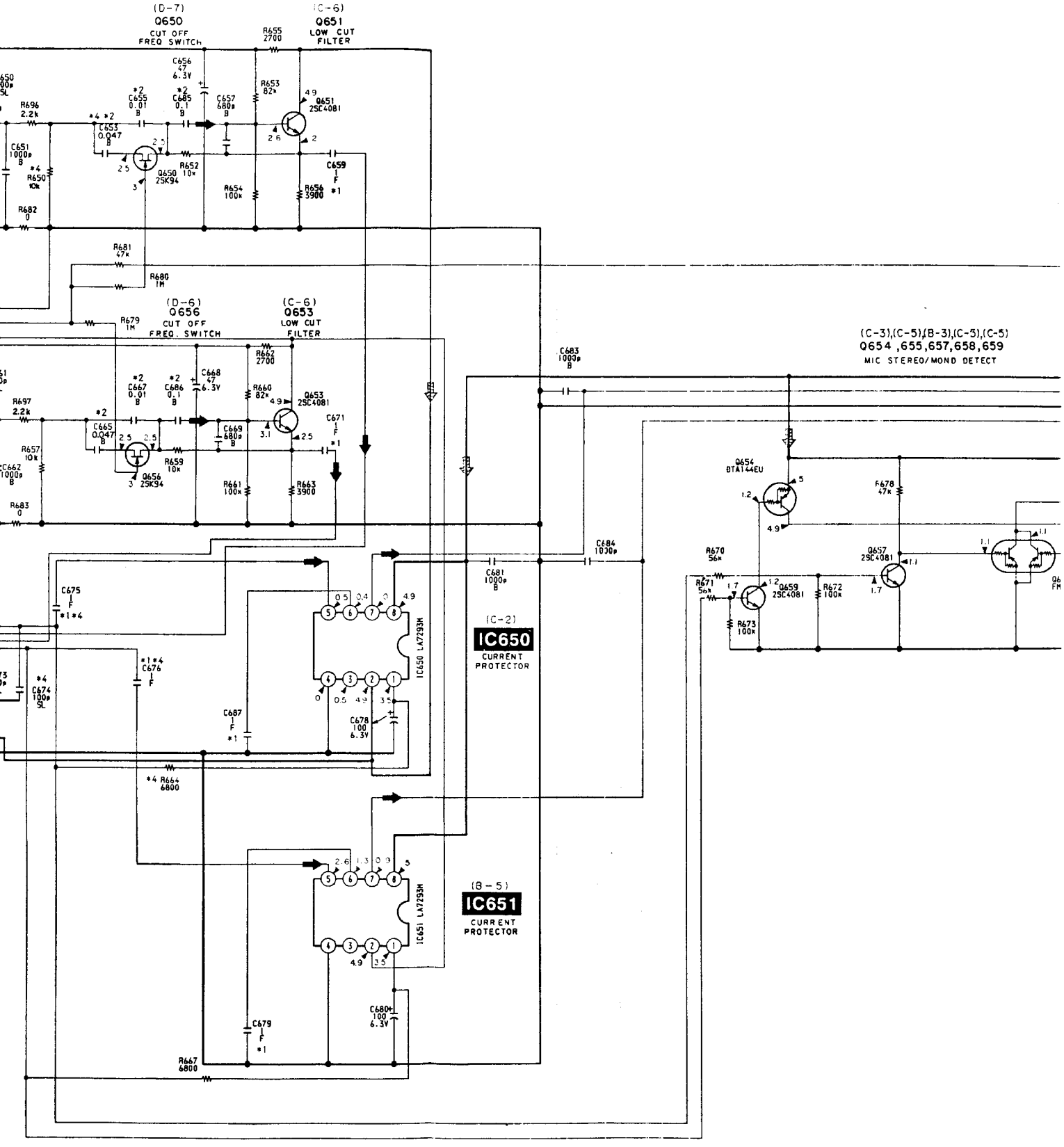

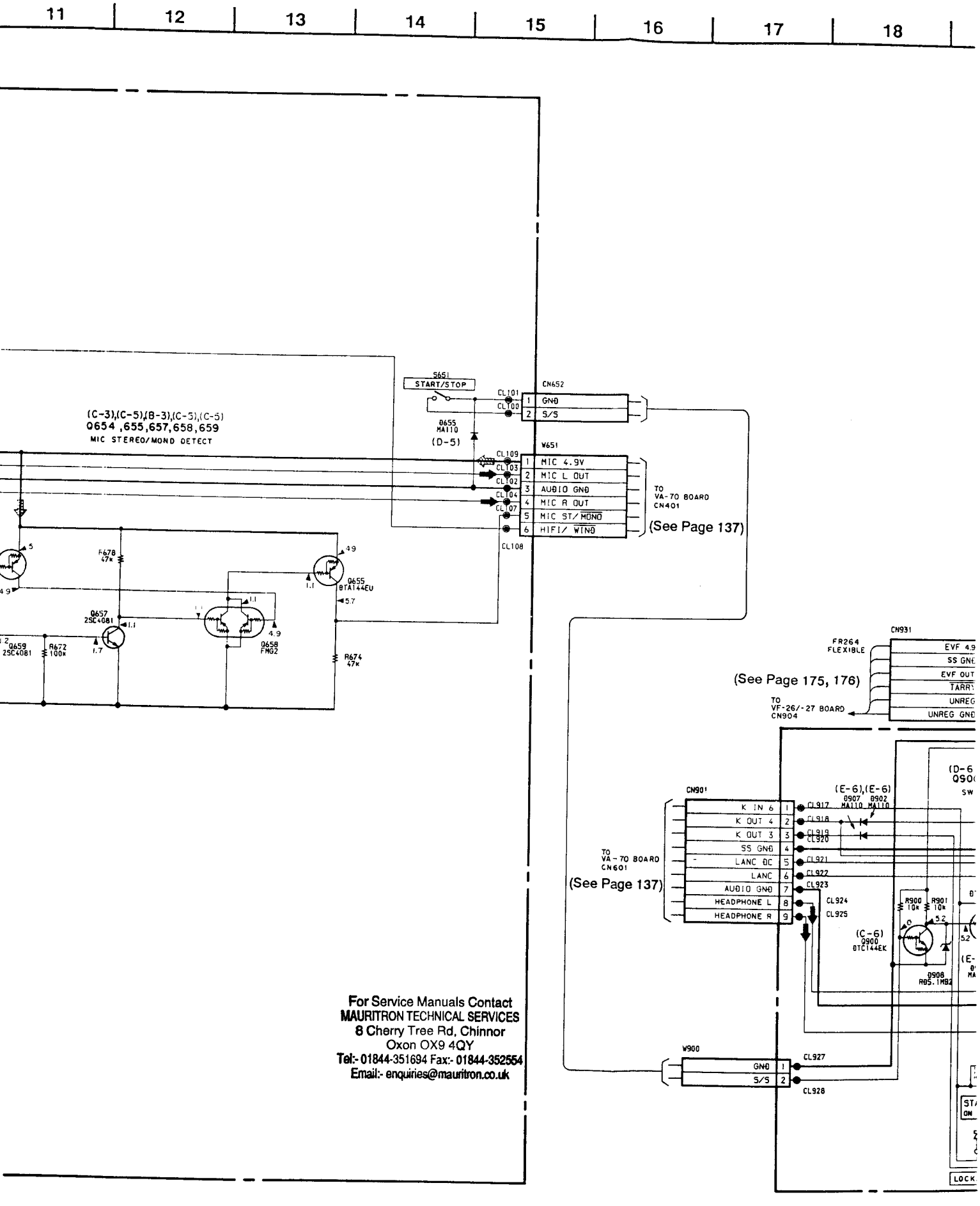
11
12
13
14
15
16
17
18
S651
START/STOP
CN652
CL101
CL100
1 GND
2 S/S
D655
MA110
(D-5)
W651
CL109
CL103
CL102
CL104
CL107
CL108
1 MIC 4.9V
2 MIC L OUT
3 AUDIO GND
4 MIC R OUT
5 MIC ST/MONO
6 HIFI/ WIND
TO
VA-70 BOARD
CN401
(See Page 137)
(C-3),(C-5),(B-3),(C-5),(C-5)
Q654 ,655,657,658,659
MIC STEREO/MOND DETECT
R678
47K
Q655
DTA144EU
Q657
2SC4081
Q659
2SC4081
R672
100K
Q658
FMG2
R674
47K
CN931
FR264
FLEXIBLE
EVF 4.9
SS GND
EVF OUT
TARR
UNREG
UNREG GND
(See Page 175, 176)
TO
VF-26/-27 BOARD
CN904
CN901
K IN 6
K OUT 4
K OUT 3
SS GND
LANC DC
LANC
AUDIO GND
HEADPHONE L
HEADPHONE R
1
2
3
4
5
6
7
8
9
CL917
CL918
CL919
CL920
CL921
CL922
CL923
CL924
CL925
(E-6),(E-6)
D907
MA110
D902
MA110
TO
VA-70 BOARD
CN601
(See Page 137)
R900
10K
R901
10K
(C-6)
Q900
DTC144EK
D908
RD5.1MB2
W900
GND
S/S
1
2
CL927
CL928
For Service Manuals Contact
MAURITRON TECHNICAL SERVICES
8 Cherry Tree Rd, Chinnor
Oxon OX9 4QY
Tel:- 01844-351694 Fax:- 01844-352554
Email:- enquiries@mauritron.co.uk

• **SIGNAL PATH**

	VIDEO SIGNAL			AUDIO SIGNAL
	CHROMA	Y	Y/CHROMA/DATA	
REC				➡
PB				⇨

-70 BOARD
401
ee Page 137)

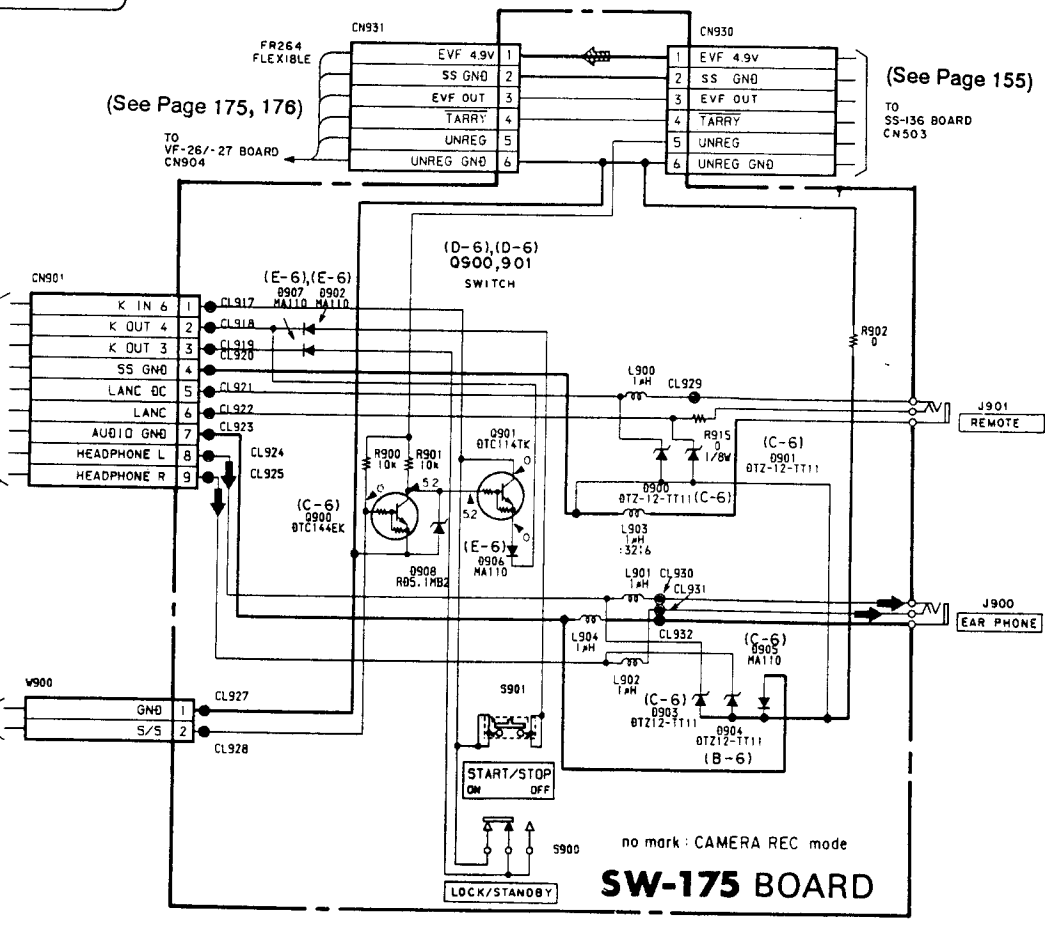

For Service Manuals Contact
MAURITRON TECHNICAL SERVICES
8 Cherry Tree Rd, Chinnor
Oxon OX9 4QY
Tel:- 01844-351694 Fax:- 01844-352554
Email:- enquiries@mauritron.co.uk

For Service Manuals Contact
MAURITRON TECHNICAL SERVICES
8 Cherry Tree Rd, Chinnor
Oxon OX9 4QY
Tel:- 01844-351694 Fax:- 01844-352554
Email:- enquiries@mauritron.co.uk

SS-136 (SERVO/SYS

— Ref. No. SS-136 BOARD:

RP-77 board is replaced a

* A-7062-778-A SS-136 (PB) BOARD, COMPLETE
****
(Ref. No 3,000 Series)

< DIODE >

D501	8-719-941-86	DIODE	DAN202U
D506	8-719-941-86	DIODE	DAN202U
D510	8-719-404-46	DIODE	MA110
D901	8-719-938-75	DIODE	SB05-05CP
D902	8-719-938-75	DIODE	SB05-05CP
D903	8-719-938-78	DIODE	SB10-05PCP

< IC >

IC501	8-752-818-70	IC	CXP80116-830Q
IC502	8-759-148-05	IC	CXA8010M
IC503	8-759-990-55	IC	CXA8006M
IC504	8-752-056-72	IC	CXA1127M
IC506	8-752-055-48	IC	CXA1204Q
IC507	8-759-100-93	IC	uPC393G2
IC507	8-759-509-91	IC	XRA10393F
IC507	8-759-998-92	IC	LM393DR
IC508	8-759-748-72	IC	BR93C46F
IC508	8-759-979-38	IC	AK93C46F
IC901	8-759-500-42	IC	MB3783PFV

< TRANSISTOR >

Q400	8-729-905-35	TRANSISTOR	2SC4081T106Q
Q401	8-729-905-35	TRANSISTOR	2SC4081T106Q
Q402	8-729-905-35	TRANSISTOR	2SC4081T106Q
Q403	8-729-905-35	TRANSISTOR	2SC4081T106Q
Q404	8-729-905-35	TRANSISTOR	2SC4081T106Q
Q502	8-729-905-35	TRANSISTOR	2SC4081T106Q
Q503	8-729-905-24	TRANSISTOR	2SA1576T106S
Q505	8-729-905-35	TRANSISTOR	2SC4081T106Q
Q506	8-729-905-24	TRANSISTOR	2SA1576T106S
Q507	8-729-905-35	TRANSISTOR	2SC4081T106Q
Q508	8-729-905-24	TRANSISTOR	2SA1576T106S
Q509	8-729-905-35	TRANSISTOR	2SC4081T106Q
Q510	8-729-905-35	TRANSISTOR	2SC4081T106Q
Q511	8-729-905-24	TRANSISTOR	2SA1576T106S
Q512	8-729-907-00	TRANSISTOR	DTC114EU
Q513	8-729-905-35	TRANSISTOR	2SC4081T106Q
Q514	8-729-905-35	TRANSISTOR	2SC4081T106Q
Q515	8-729-905-18	TRANSISTOR	DTC144EU
Q516	8-729-905-18	TRANSISTOR	DTC144EU
Q540	8-729-822-48	TRANSISTOR	FC101-TR
Q901	8-729-805-25	TRANSISTOR	2SB1121-ST-TD
Q902	8-729-805-25	TRANSISTOR	2SB1121-ST-TD
Q903	8-729-805-25	TRANSISTOR	2SB1121-ST-TD
Q904	8-729-820-47	TRANSISTOR	2SB1202FAT-TL
Q905	8-729-905-35	TRANSISTOR	2SC4081T106Q

SS-136 BOARD (C

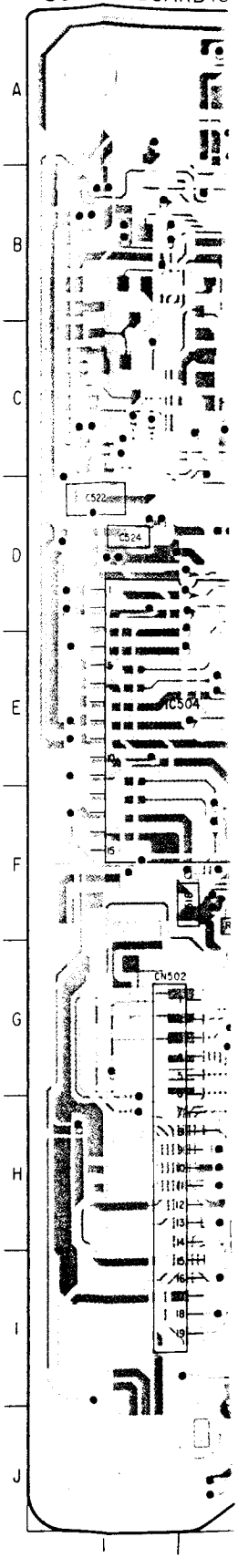

09

SS-136 (SERVO/SYSTEM CONTROL), RP-77 (VIDEO HEAD AMP) PRINTED WIRING BOARDS

— Ref. No. SS-136 BOARD: 3000 series —

RP-77 board is replaced as a block, so that the PRINTED WIRING BOARD of it is omitted.

SS-136 BOARD (COMPONENT SIDE)

For Service Manuals Contact
MAURITRON TECHNICAL SERVICES
8 Cherry Tree Rd, Chinnor
Oxon OX9 4QY
Tel:- 01844-351694 Fax:- 01844-352554
Email:- enquiries@mauritron.co.uk

For Service Manuals Contact
MAURITRON TECHNICAL SERVICES
8 Cherry Tree Rd, Chinnor
Oxon OX9 4QY
Tel:- 01844-351694 Fax:- 01844-352554
Email:- enquiries@mauritron.co.uk

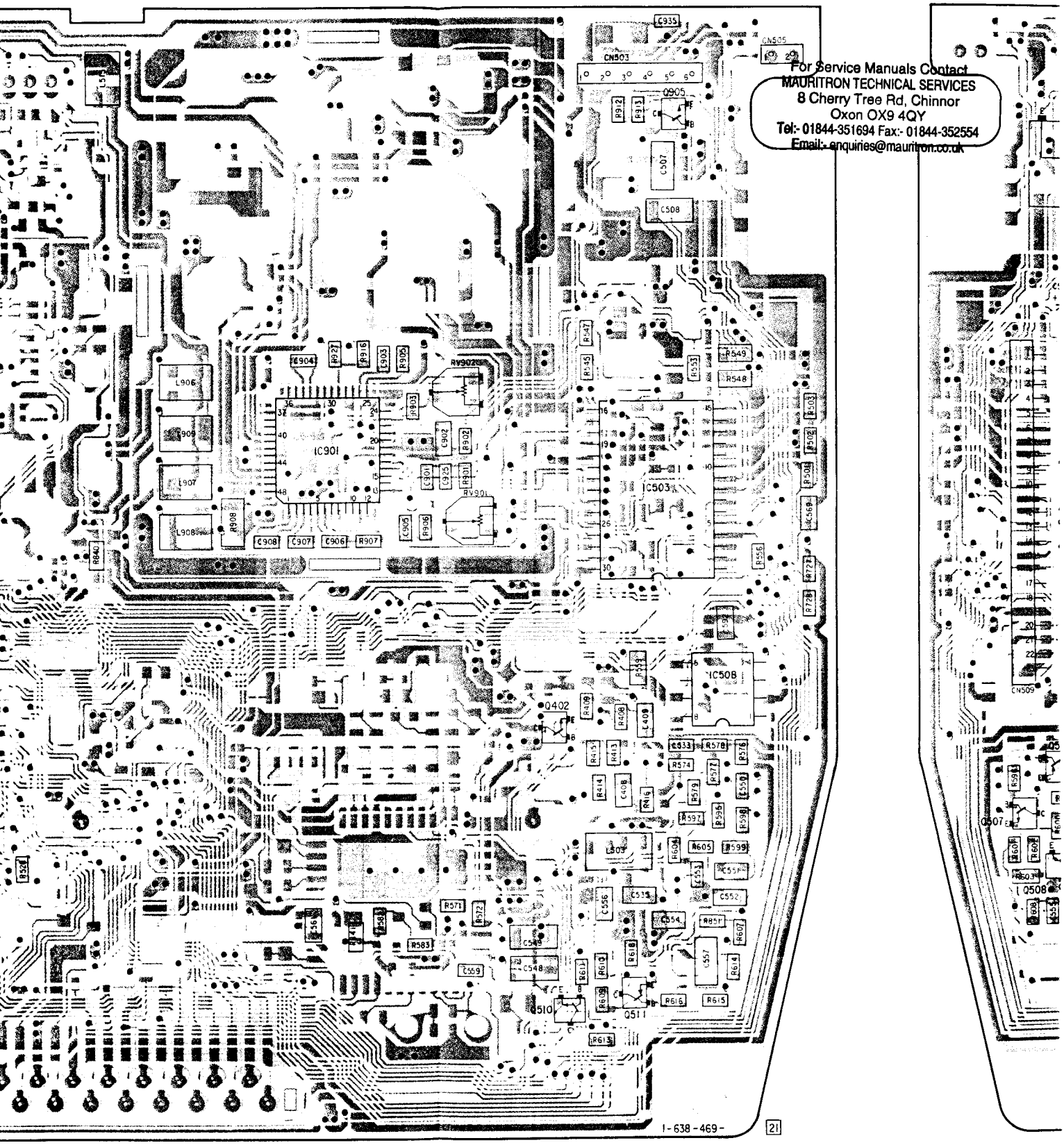

6 7 8 9 10 11 12 13 14

SS-136 BOARD (CONDUCTOR SIDE)

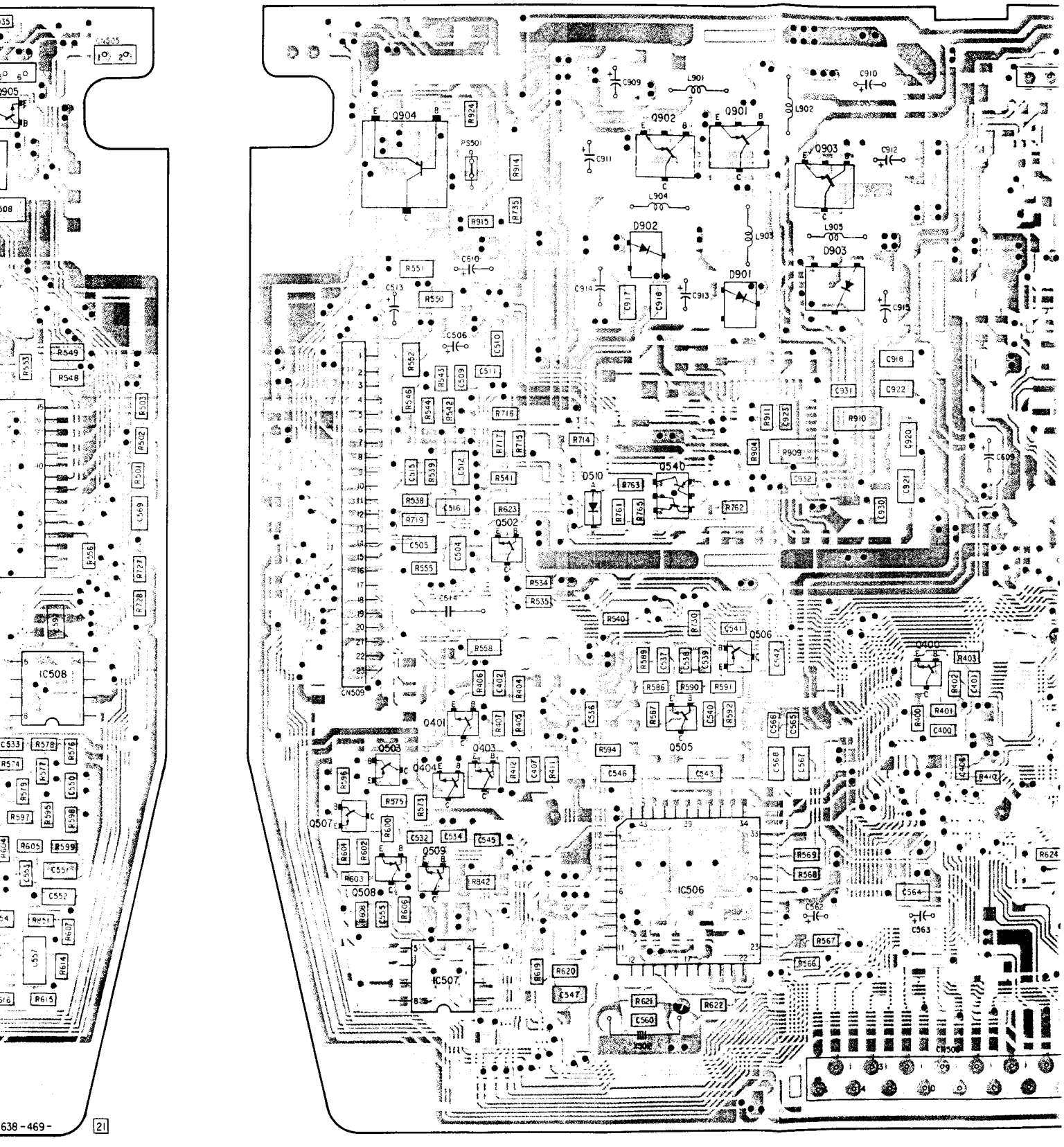

For Service Manuals Contact
MAURITRON TECHNICAL SERVICES
8 Cherry Tree Rd, Chinnor
Oxon OX9 4QY
Tel:- 01844-351694 Fax:- 01844-352554
Email:- enquiries@mauritron.co.uk

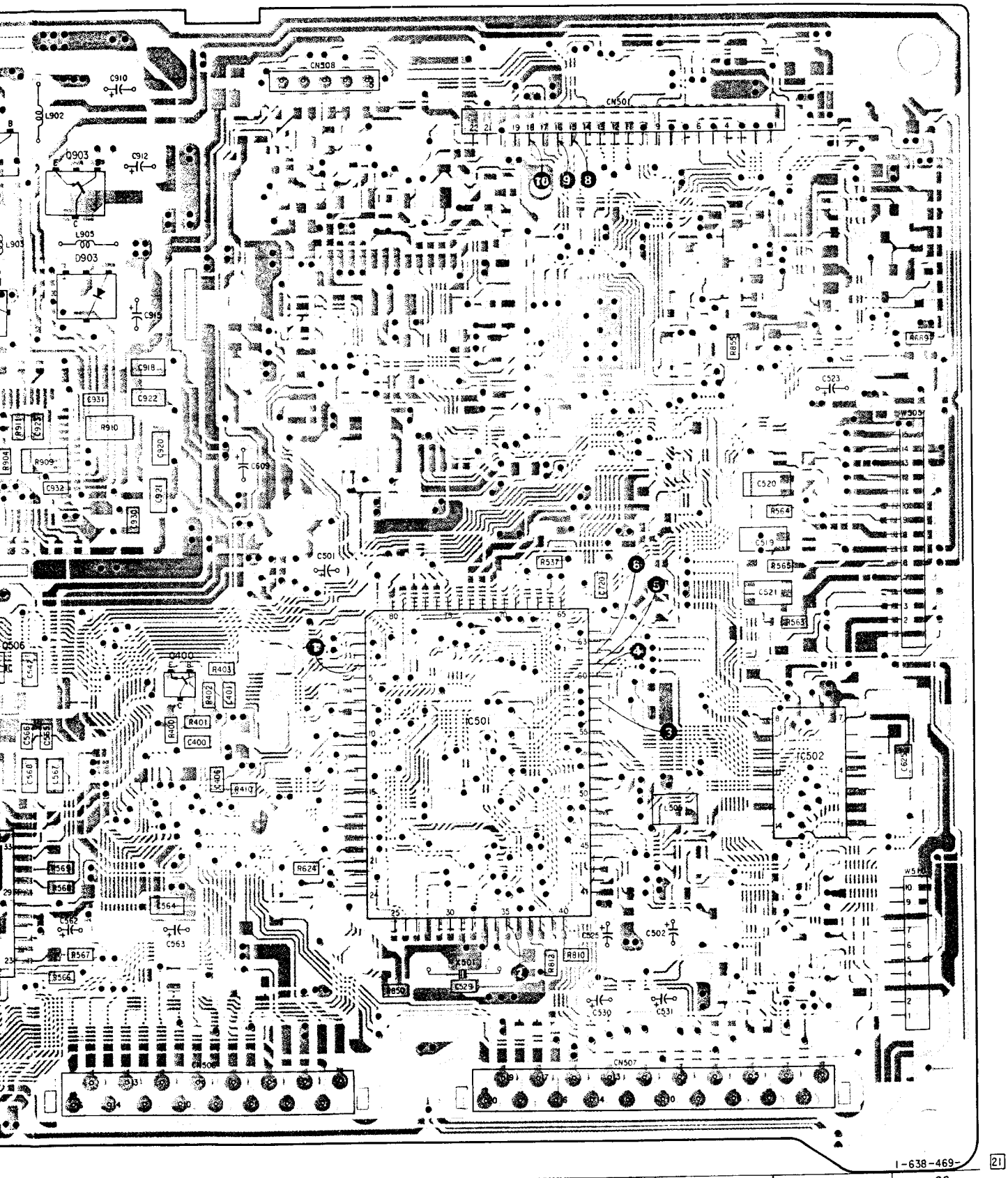

18 19 20 21 22 23 24 25 26

— Ref. No. SS-136 BOARD: 3000 series —

For Service Manuals Contact
MAURITRON TECHNICAL SERVICES
8 Cherry Tree Rd, Chinnor
Oxon OX9 4QY
Tel:- 01844-351694 Fax:- 01844-352554
Email:- enquiries@mauritron.co.uk

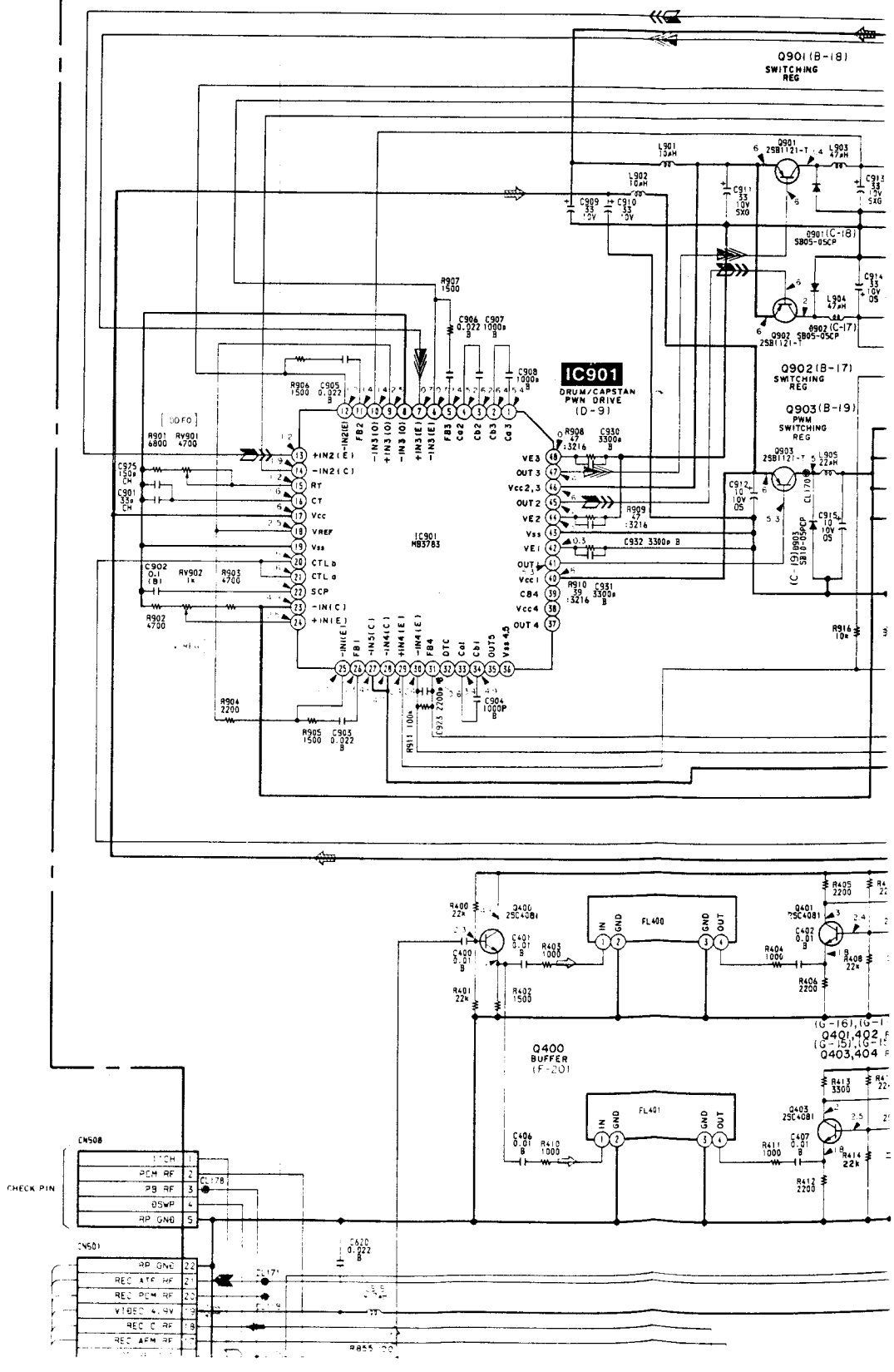

5 6 7 8 9 10 11 12

(See Page 162)

For Service Manuals Contact
MAURITRON TECHNICAL SERVICES
8 Cherry Tree Rd, Chinnor
Oxon OX9 4QY
Tel:- 01844-351694 Fax:- 01844-352554
Email:- enquiries@mauritron.co.uk

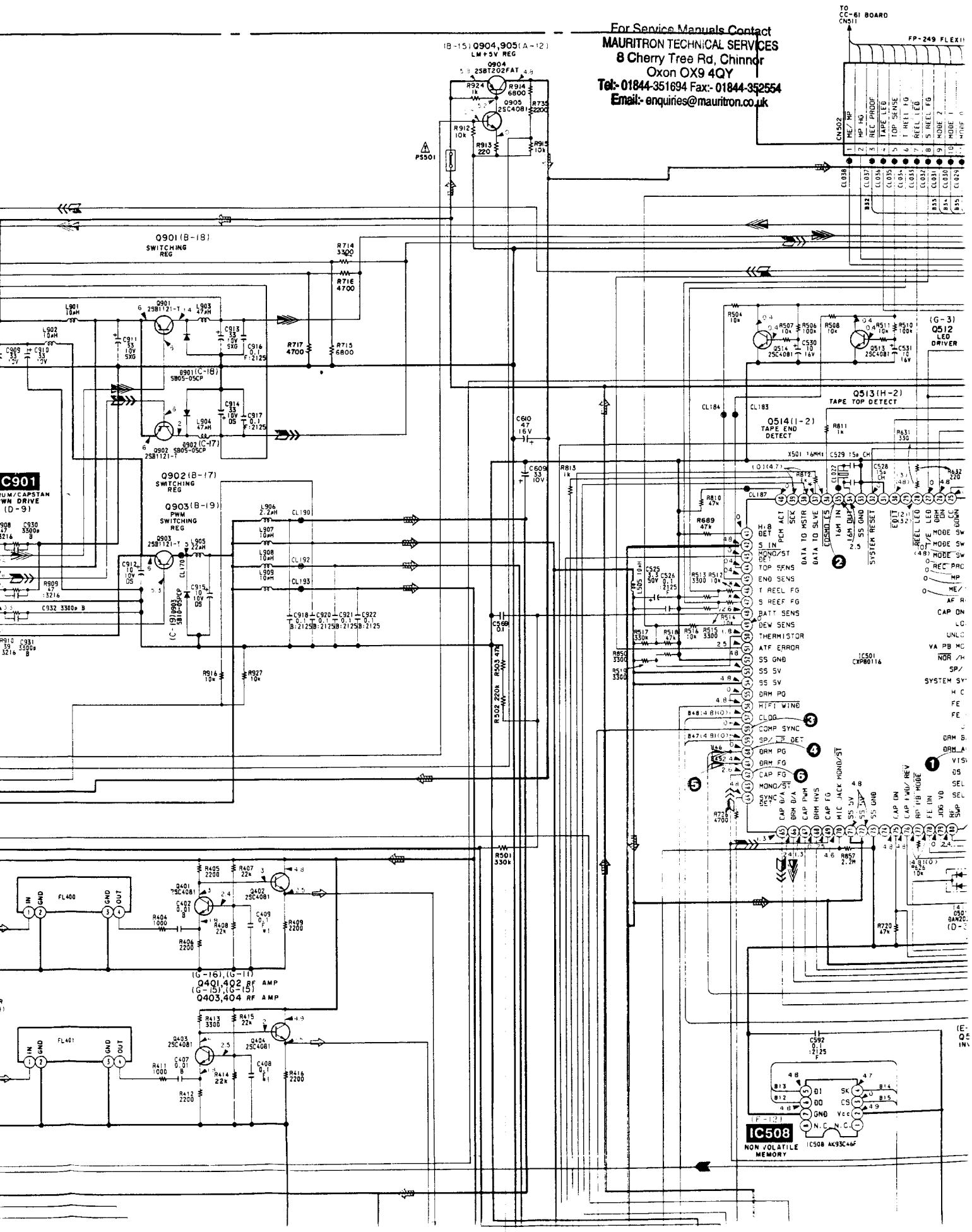

(See Page 162)

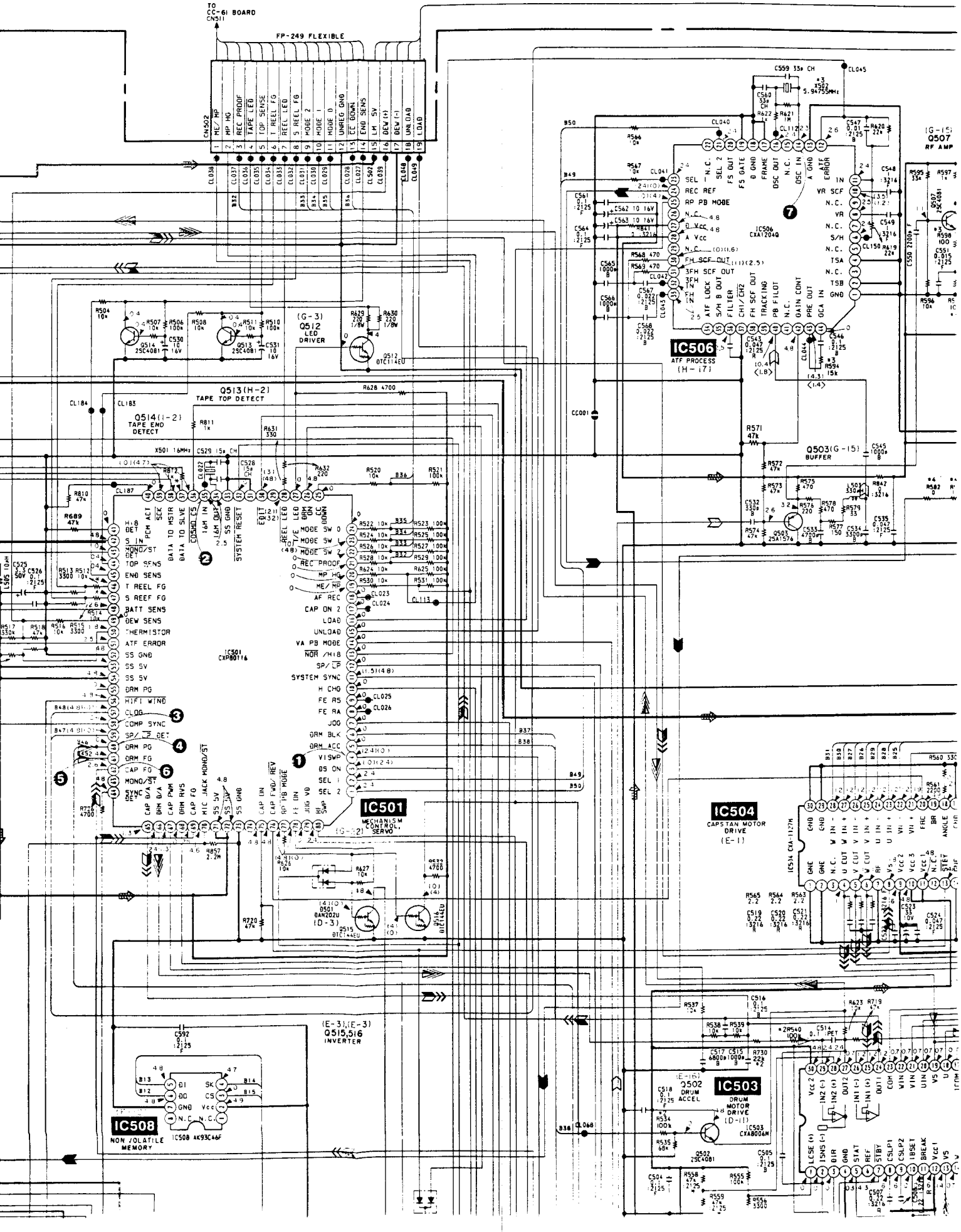
TO CC-61 BOARD CN511
FP-249 FLEXIBLE
CN502
IC506 CXA1204Q
ATF PROCESS
IC501 CXP80116
MECHANISM CONTROL, SERVO
IC504 CAPSTAN MOTOR DRIVE
IC503 DRUM MOTOR DRIVE
IC508 NON VOLATILE MEMORY
IC508 AK93C46F
Q513(H-2) TAPE TOP DETECT
Q514(I-2) TAPE END DETECT
Q512 (G-3) LED DRIVER
Q503(G-15) BUFFER
Q515,516 (E-3),(E-3) INVERTER
Q502 (E-15) DRUM ACCEL
Q507 (G-15) RF AMP
X501 16MHz
X502 5.94755MHz
C559 33p CH
CL045
CL040
CL041
CL042
CL043
CL044
CL046
CL047
CL048
CL049
CL150
CL183
CL184
CL187
CC001
R628 4700
R631 330
R632 220
R571 47k
R572 47k
R573 47k
R575 470
R576 220
R578 470
R579 33
R580 0
R581 0
R582 0
R583 0
R584 0
R594 15k
R595 33k
R596 10k
R597 1k
R598 100
R599 10k
R619 22k
R620 22k
R621 1M
R622 1k
R689 47k
R720 47k
R722 4700
R723 4700
R727 4700
R810 47k
R811 1k
R812 1k
R857 2.2M
C550 2200p F
C551 0.015 F
C560 33p CH
C561 0.1 F
C562 10 16V
C563 10 16V
C564 0.1 F
C565 1000p B
C566 1000p B
C567 0.022 B
C568 0.022 B
C543 0.047 R
C544 0.1 F
C545 1000p B
C546 0.1 F
C547 0.01 F
C548 3216
C549 3216
C532 330p B
C533 4700 B
C534 3300 B
C535 0.047 F
C536 0.047 B
C537 0.047 B
C538 0.047 B
C539 0.047 B
C540 0.1 F
C541 0.1 F
C542 0.1 F
C516 0.1 F
C517 6800p B
C518 0.1 F
C519 0.22 R
C520 0.22 R
C521 0.22 R
C522 0.22 R
C523 33 10V
C524 0.047 F
C525 3.3 50V
C526 0.1 F
C527 0.1 F
C528 CH
C529 15p CH
C530 10 16V
C531 10 16V
C592 0.1 F
C504 0.1 F
C505 0.1 F
C507 0.22 R
C508 0.22 R
R504 10k
R505 10k
R506 100k
R507 10k
R508 10k
R509 10k
R510 100k
R511 10k
R512 3300
R513 3300
R514 10k
R515 3300
R516 10k
R517 330k
R518 47k
R519 10k
R520 10k
R521 100k
R522 10k
R523 100k
R524 10k
R525 100k
R526 10k
R527 100k
R528 10k
R529 100k
R530 10k
R531 100k
R532 10k
R533 10k
R534 100k
R535 68k
R536 10k
R537 10k
R538 10k
R539 10k
R540 100k
R541 2200
R542 2.2
R543 2.2
R544 2.2
R545 2.2
R546 10k
R547 10k
R548 10k
R549 10k
R550 10k
R551 10k
R552 10k
R553 10k
R554 10k
R555 100k
R556 3300
R557 47k
R558 47k
R559 47k
R560 330
R561 2200
R562 10k
R563 2.2
R564 2.2
R565 2.2
R566 10k
R567 10k
R568 470
R569 470
R570 10k
R623 47k
R719 47k
R730 22k
R731 22k
R732 22k
R733 22k
R734 22k
R735 22k
R736 22k
R737 22k
R738 22k
R739 22k
R740 22k
R741 22k
R742 22k
R743 22k
R744 22k
R745 22k
R746 22k
R747 22k
R748 22k
R749 22k

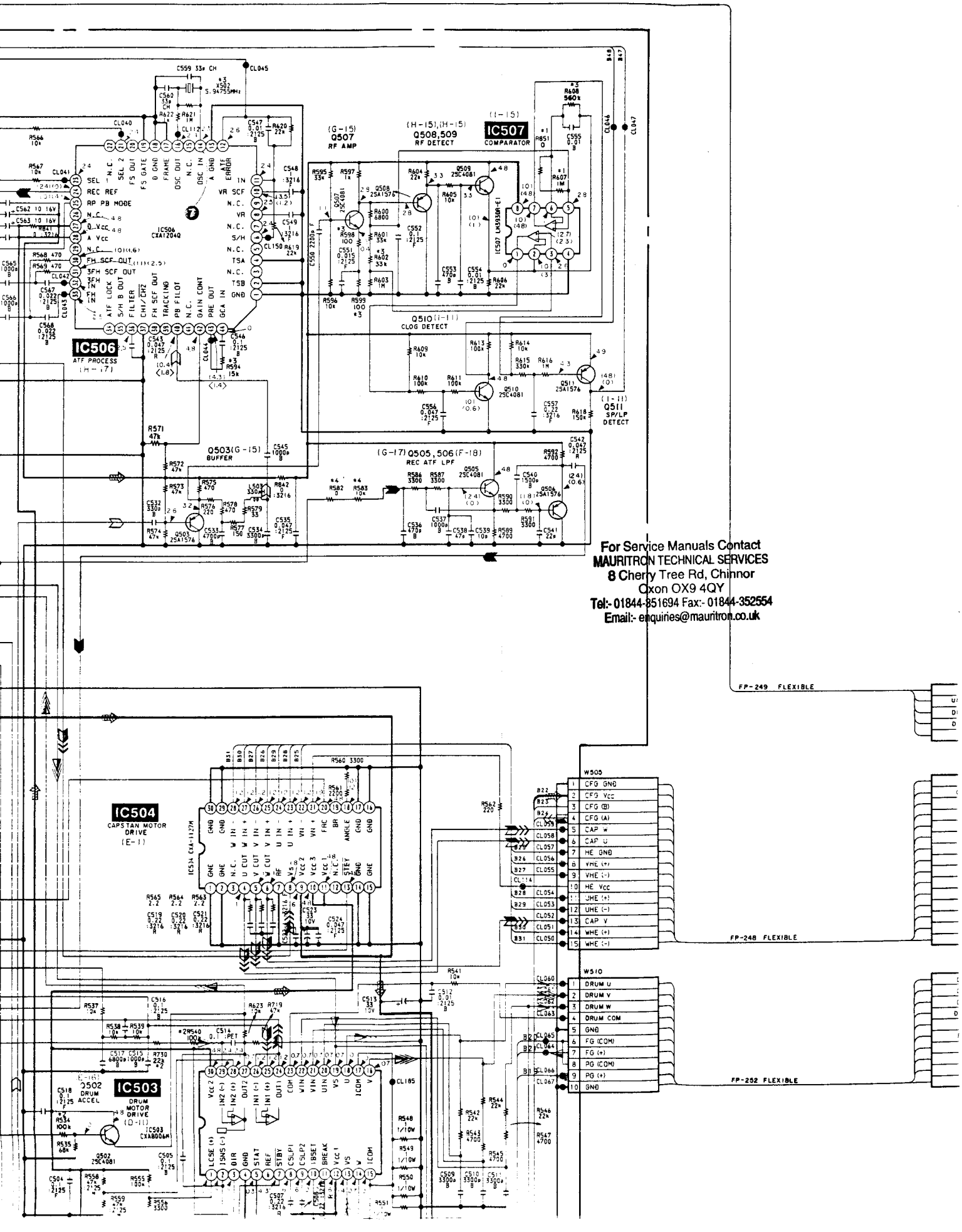

For Service Manuals Contact
MAURITRON TECHNICAL SERVICES
8 Cherry Tree Rd, Chinnor
Oxon OX9 4QY
Tel:- 01844-351694 Fax:- 01844-352554
Email:- enquiries@mauritron.co.uk

SS-136 BOARD

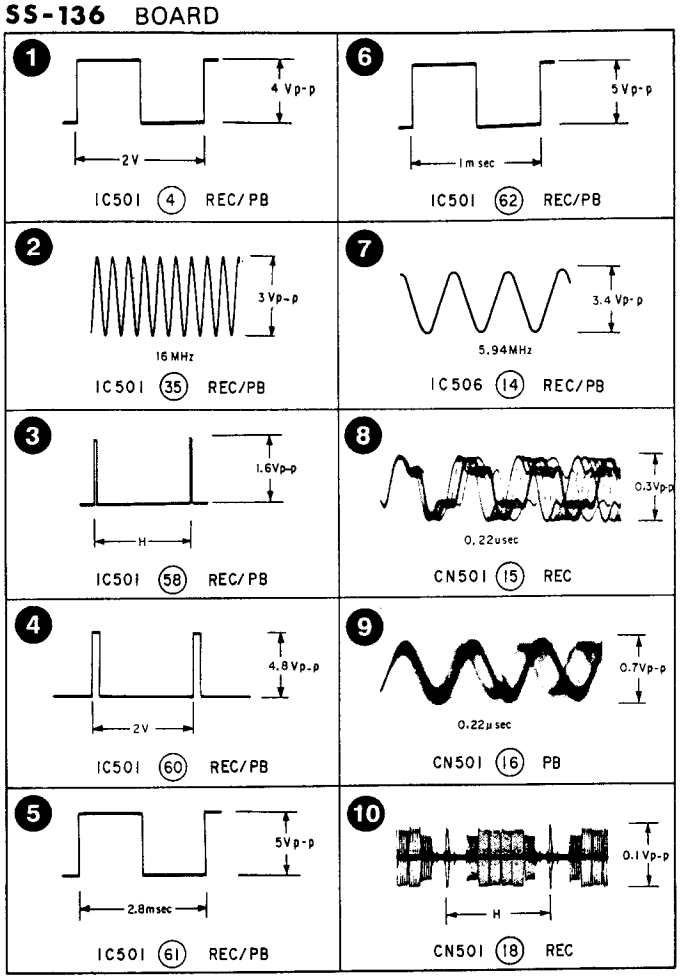

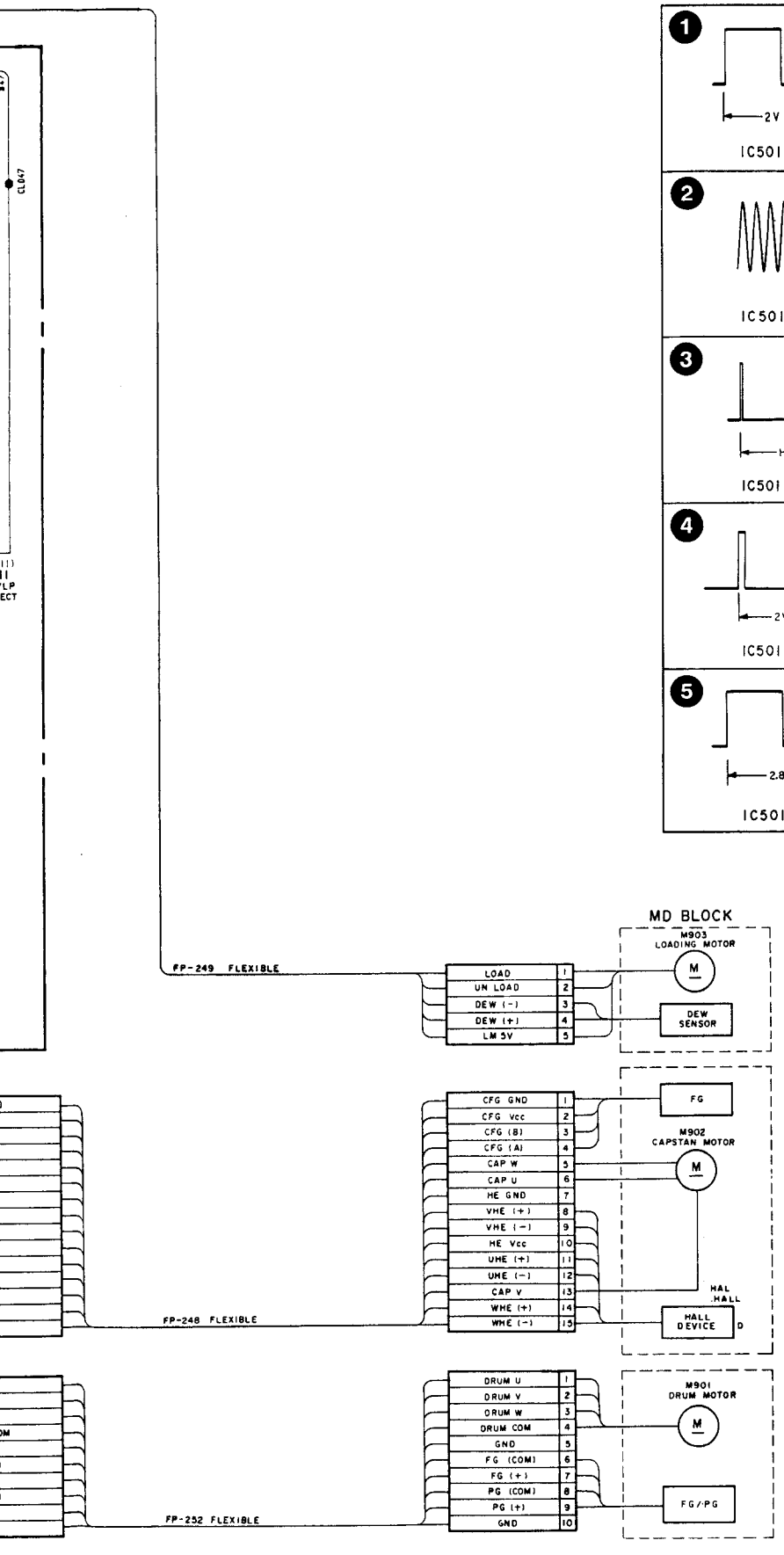

- **SIGNAL PATH**

	VIDEO SIGNAL			AUDIO SIGNAL
	CHROMA	Y	Y/CHROMA/DATA	

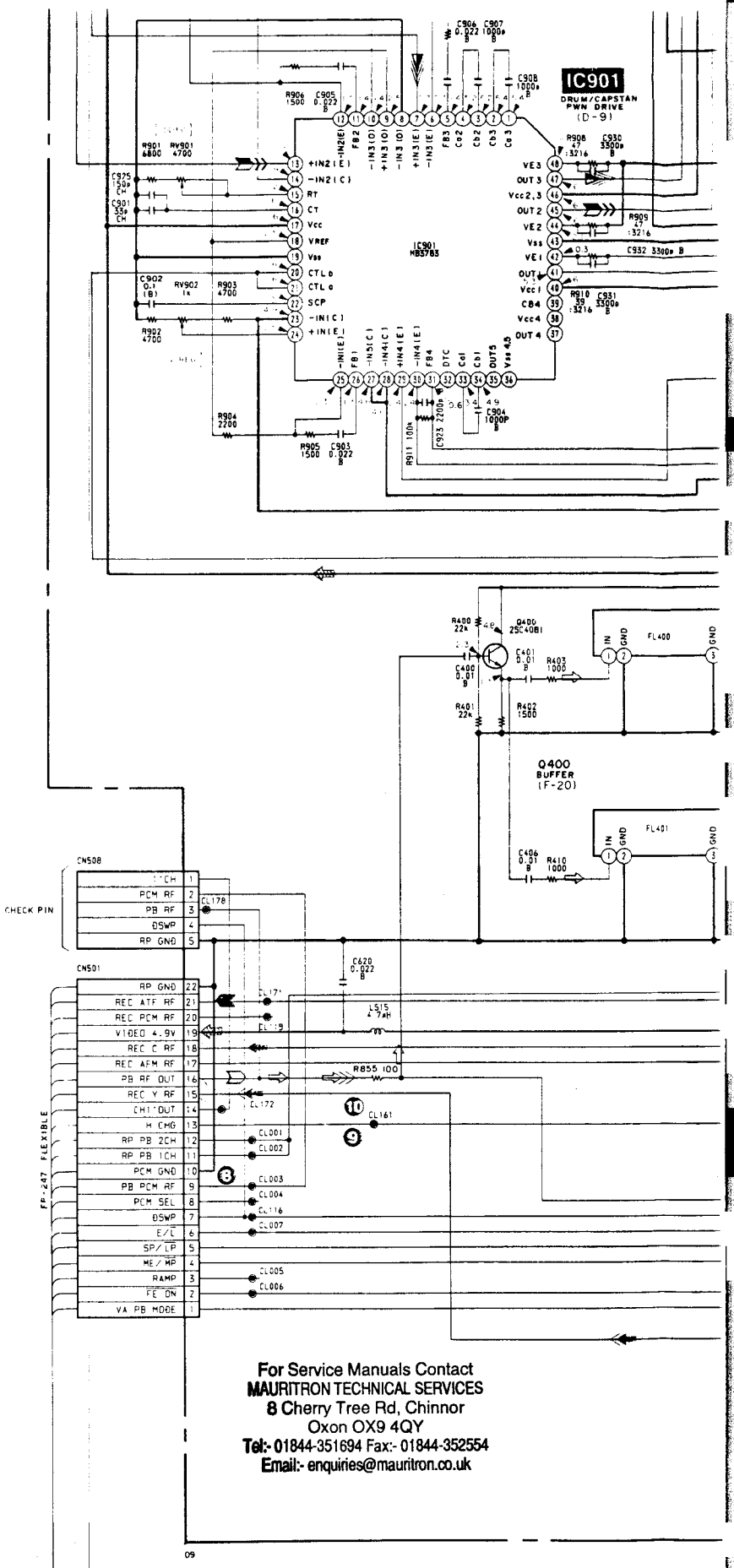

For Service Manuals Contact
MAURITRON TECHNICAL SERVICES
8 Cherry Tree Rd, Chinnor
Oxon OX9 4QY
Tel:- 01844-351694 Fax:- 01844-352554
Email:- enquiries@mauritron.co.uk

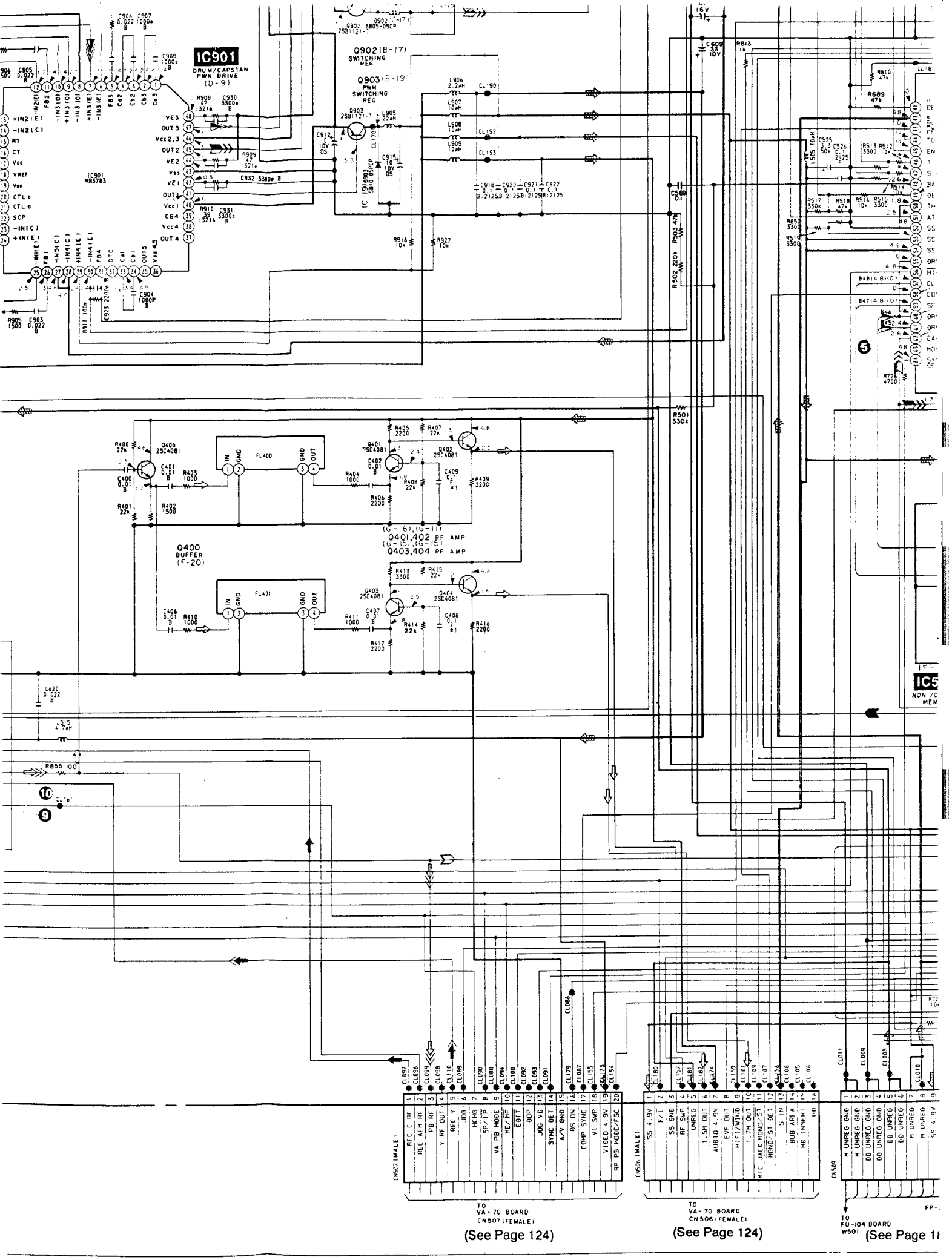
IC901
DRUM/CAPSTAN PWM DRIVE (D-9)
IC901 MB3783
0902 (B-17) SWITCHING REG
0903 (B-19) PWM SWITCHING REG
Q400 BUFFER (F-20)
Q401,402 RF AMP (G-15),(G-16)
Q403,404 RF AMP (G-16),(G-17)
FL400
FL401
TO VA-70 BOARD CN507 (FEMALE)
(See Page 124)
TO VA-70 BOARD CN506 (FEMALE)
(See Page 124)
TO FU-104 BOARD W501
(See Page 18

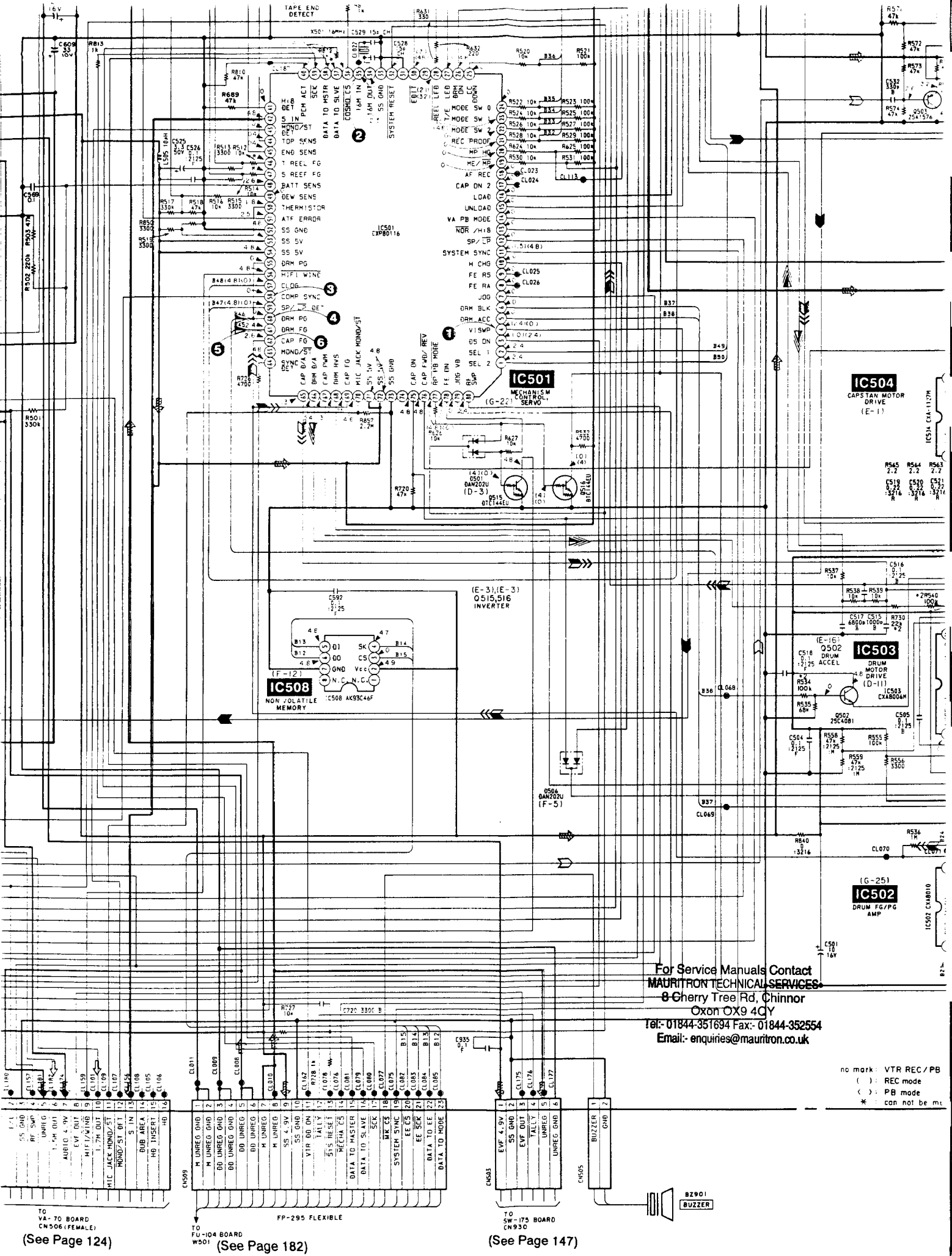

For Service Manuals Contact
MAURITRON TECHNICAL SERVICES
8 Cherry Tree Rd, Chinnor
Oxon OX9 4QY
Tel:- 01844-351694 Fax:- 01844-352554
Email:- enquiries@mauritron.co.uk

no mark : VTR REC / PB
( ) : REC mode
< > : PB mode
* : can not be me

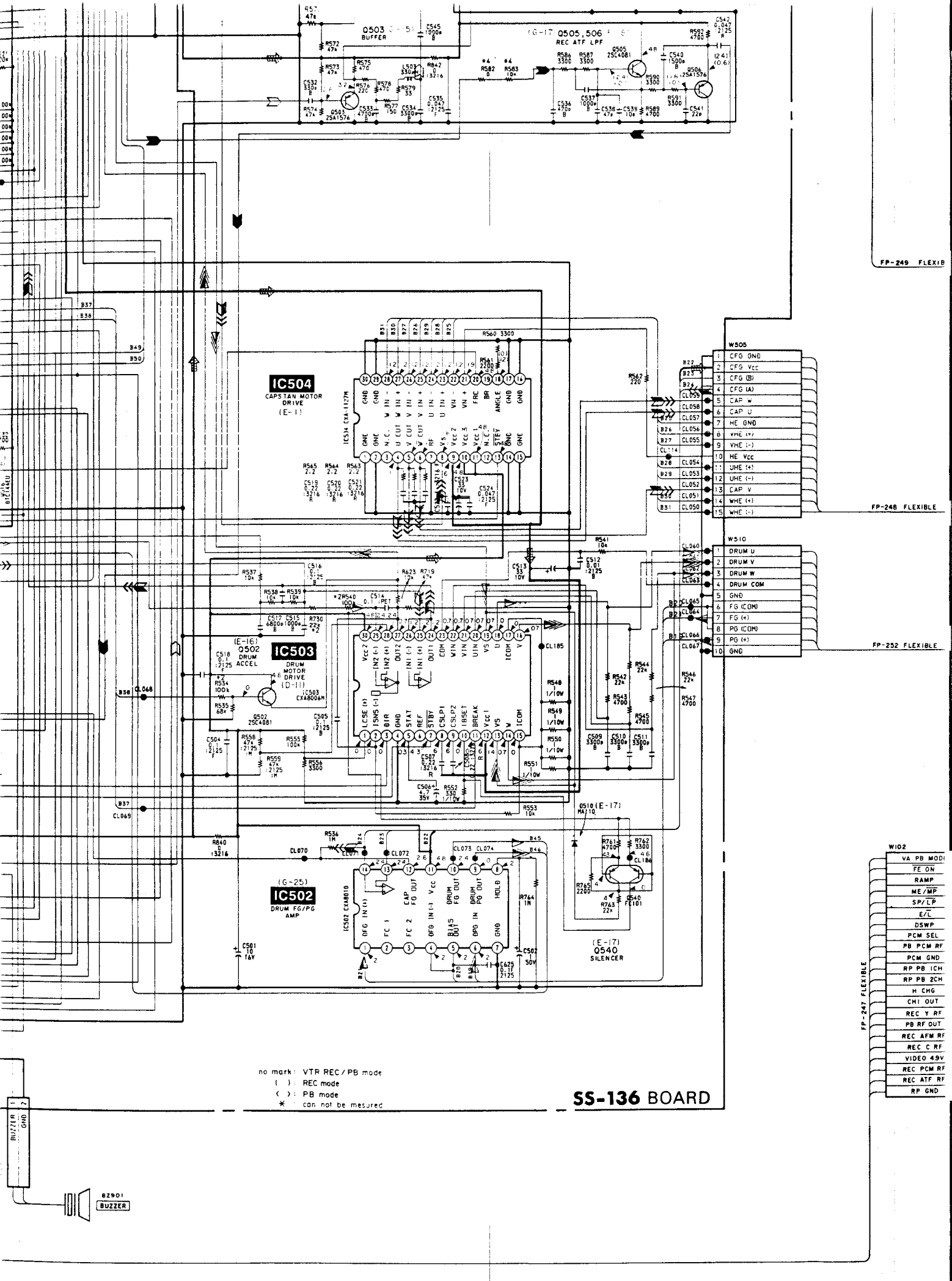
Q503 BUFFER
REC ATF LPF
Q505,506
IC504
CAPSTAN MOTOR DRIVE
(E-1)
IC503
DRUM MOTOR DRIVE
(D-11)
Q502 DRUM ACCEL
(E-16)
IC502
DRUM FG/PG AMP
(G-25)
Q540 SILENCER
(E-17)
WS05
WS10
WI02
FP-249 FLEXIB
FP-248 FLEXIBLE
FP-252 FLEXIBLE
FP-247 FLEXIBLE
BUZZER
BZ901
no mark: VTR REC/PB mode
( ): REC mode
< >: PB mode
* : can not be mesured
SS-136 BOARD

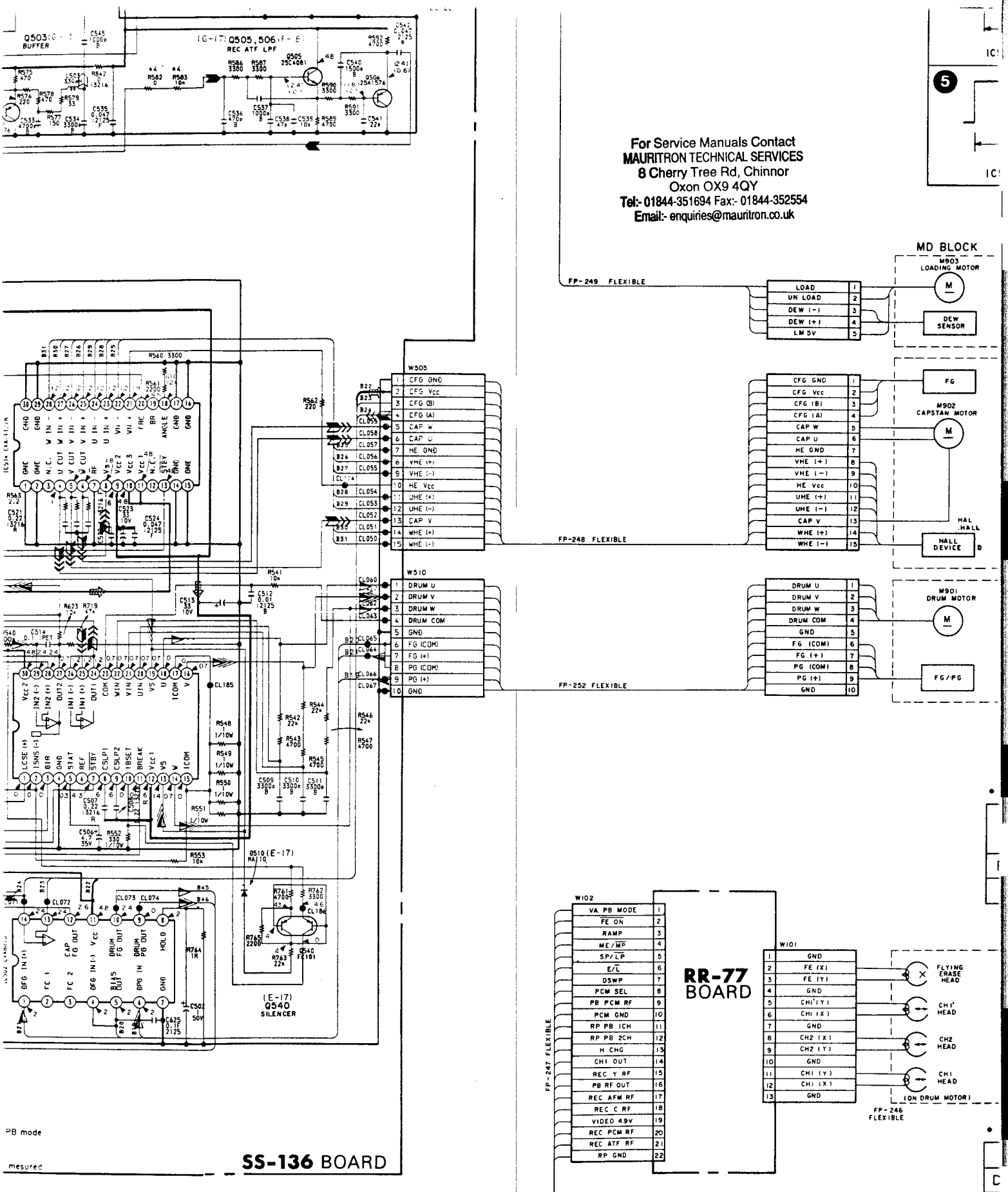
Q503 BUFFER
(E-17) Q505,506 REC ATF LPF
Q505 2SC4081
Q506 2SA1576
For Service Manuals Contact
MAURITRON TECHNICAL SERVICES
8 Cherry Tree Rd, Chinnor
Oxon OX9 4QY
Tel:- 01844-351694 Fax:- 01844-352554
Email:- enquiries@mauritron.co.uk
MD BLOCK
M903 LOADING MOTOR
LOAD
UN LOAD
DEW (-)
DEW (+)
LM 5V
DEW SENSOR
FP-249 FLEXIBLE
W505
CFG GND
CFG Vcc
CFG (B)
CFG (A)
CAP W
CAP U
HE GND
VHE (+)
VHE (-)
HE Vcc
UHE (+)
UHE (-)
CAP V
WHE (+)
WHE (-)
M902 CAPSTAN MOTOR
FG
HALL DEVICE
FP-248 FLEXIBLE
W510
DRUM U
DRUM V
DRUM W
DRUM COM
GND
FG (COM)
FG (+)
PG (COM)
PG (+)
GND
M901 DRUM MOTOR
FG/PG
FP-252 FLEXIBLE
W510 (E-17) MA10
(E-17) Q540 SILENCER
W102
VA PB MODE
FE ON
RAMP
ME/MP
SP/LP
E/L
DSWP
PCM SEL
PB PCM RF
PCM GND
RP PB 1CH
RP PB 2CH
H CHG
CH1 OUT
REC Y RF
PB RF OUT
REC AFM RF
REC C RF
VIDEO 4.9V
REC PCM RF
REC ATF RF
RP GND
FP-247 FLEXIBLE
RR-77 BOARD
W101
GND
FE (X)
FE (Y)
GND
CH1' (Y)
CH1 (X)
GND
CH2 (X)
CH2 (Y)
GND
CH1 (Y)
CH1 (X)
GND
FLYING ERASE HEAD
CH1' HEAD
CH2 HEAD
CH1 HEAD
(ON DRUM MOTOR)
FP-246 FLEXIBLE
PB mode
mesured
SS-136 BOARD

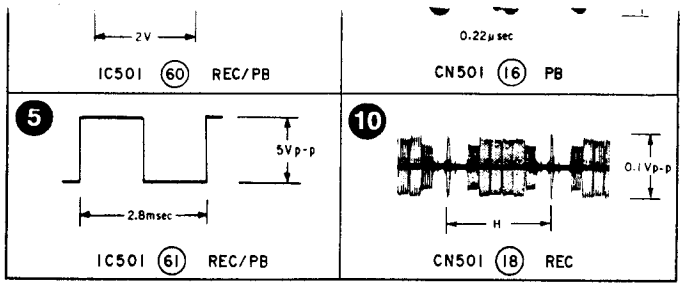

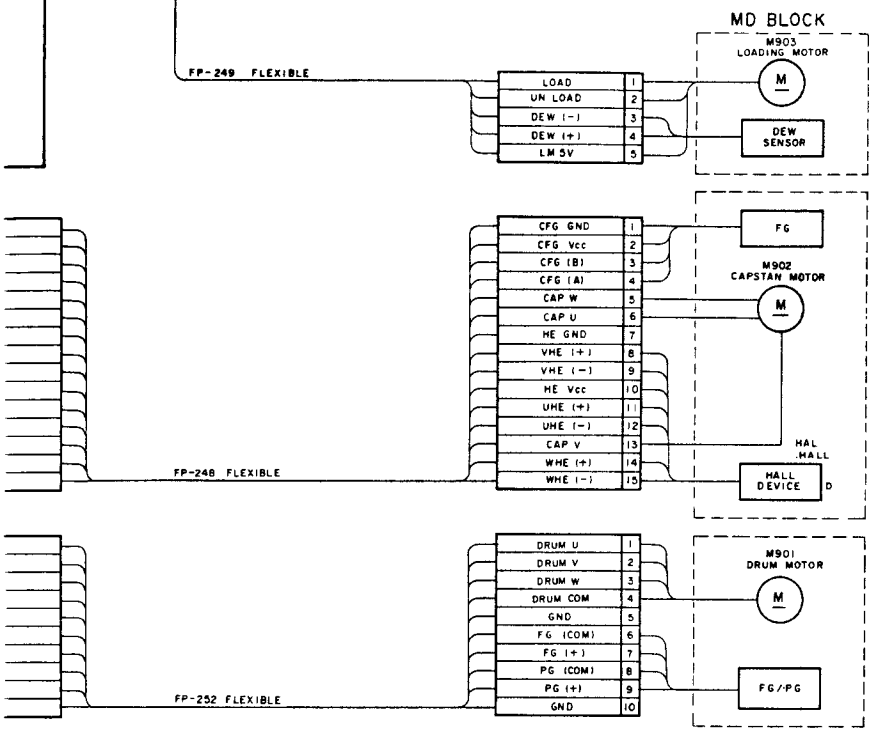

- **SIGNAL PATH**

	VIDEO SIGNAL			AUDIO SIGNAL
	CHROMA	Y	Y/CHROMA/DATA	
REC	➡	➡		➡
PB			⇨	⇨

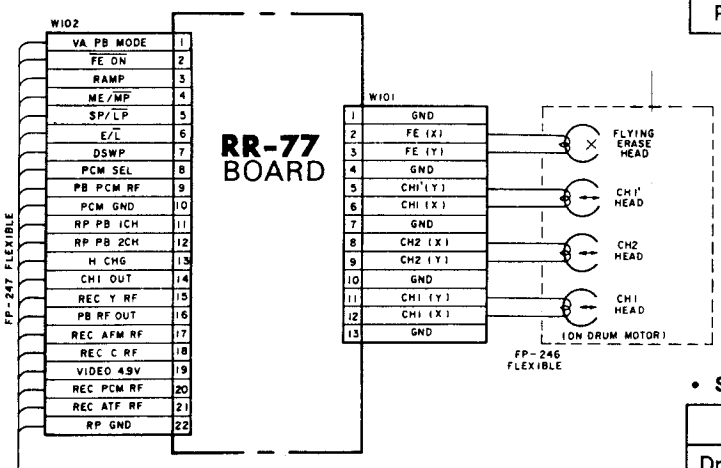

- **SIGNAL PATH**

	REC	REC/PB	PB
Drum speed servo		▷	
Drum phase servo		▷▷	
Drum servo (speed and phase)		▷▷▷	
Capstan speed servo			
Capstan phase servo			
Capstan servo (speed and phase)		▷▷▷	
Ref. signal	▶		▷

CC-61 (LINK), FP-89 (SENSOR), FP-90 (SENSOR) PRINTED WIRING BOARDS

— Ref. No. CC-61 BOARD: 10000 series, FP-89 BOARD: 11000 series, FP-90 BOARD: 12000 series —

For Service Manuals Contact
MAURITRON TECHNICAL SERVICES
8 Cherry Tree Rd, Chinnor
Oxon OX9 4QY
Tel:- 01844-351694 Fax:- 01844-352554
Email:- enquiries@mauritron.co.uk

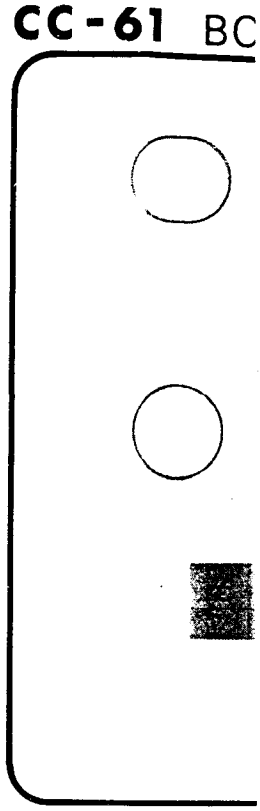

* 1-628-060-12 FP-89 FLEXIBLE BOARD
****
(Ref. No 11,000

< DIODE >

D301 8-719-820-44 PHOTO COUPLER TLP907

< TRANSISTOR >

CC-61 BOARD

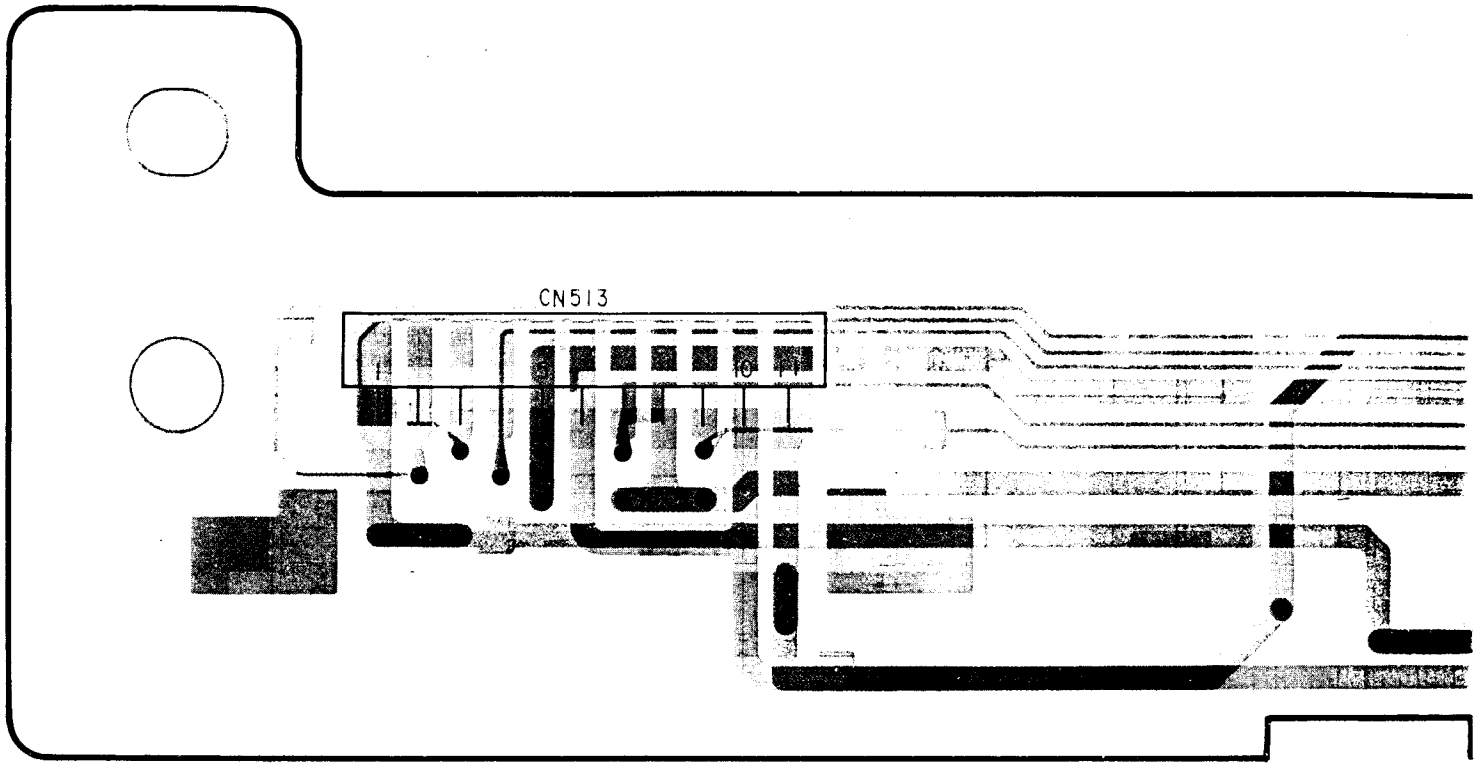

FP-89 BOARD
(FLEXIBLE)

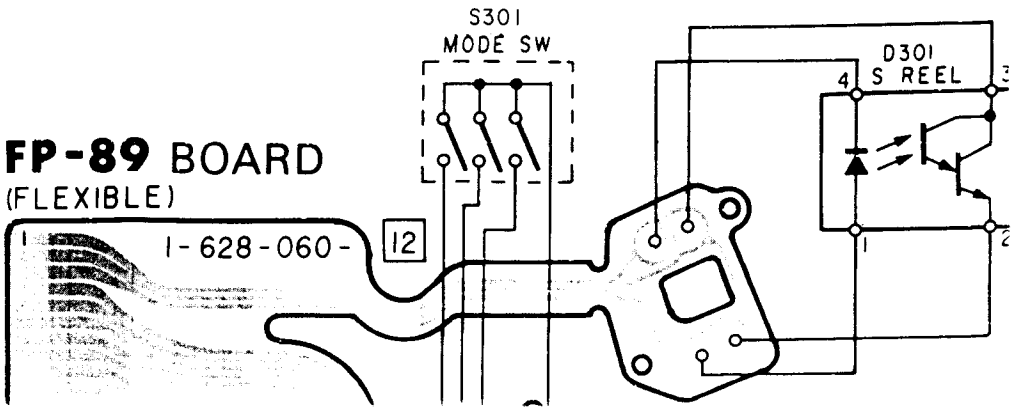

2 FP-89 FLEXIBLE BOARD
****
(Ref. No 11,000 Series)

< DIODE >

9-820-44 PHOTO COUPLER TLP907

< TRANSISTOR >

For Service Manuals Contact
MAURITRON TECHNICAL SERVICES
8 Cherry Tree Rd, Chinnor
Oxon OX9 4QY
Tel:- 01844-351694 Fax:- 01844-352554
Email:- enquiries@mauritron.co.uk

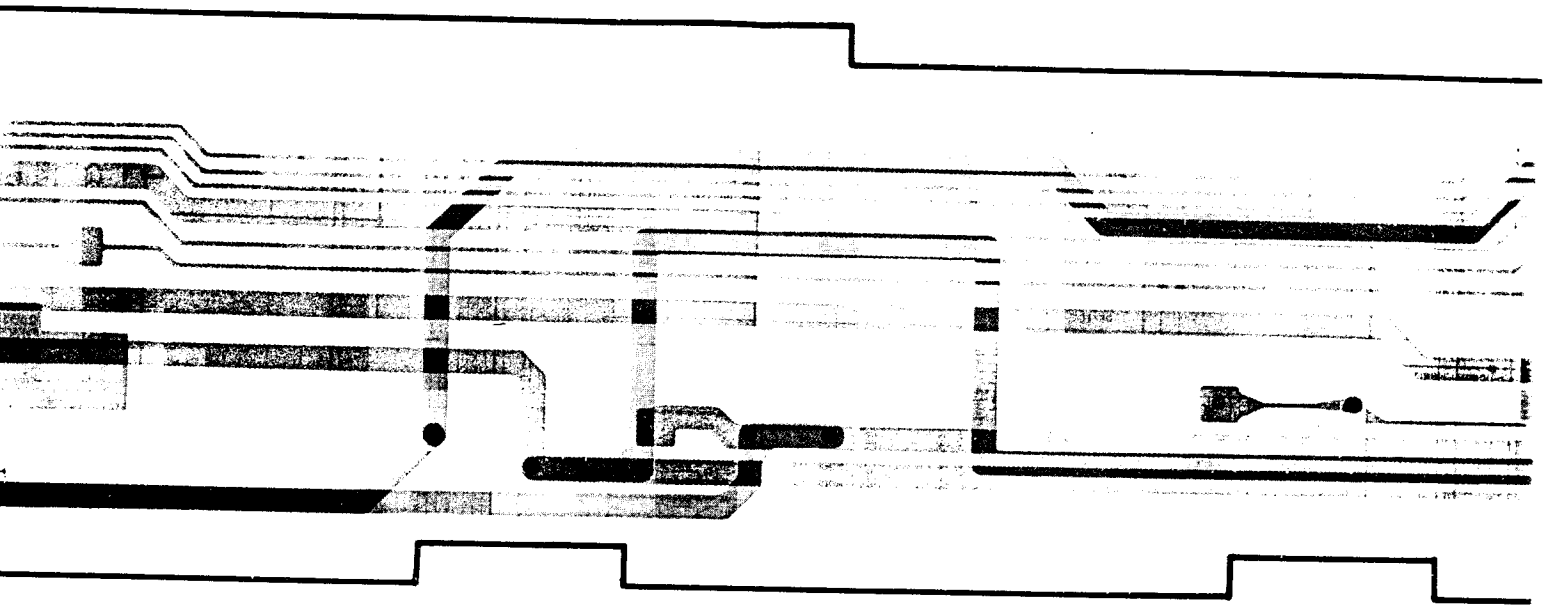

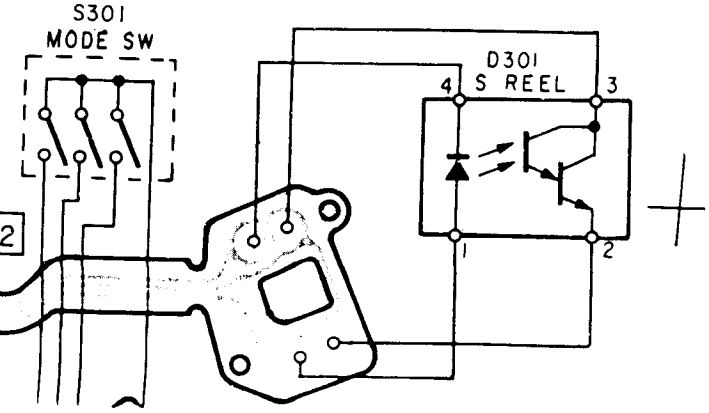

FP-90 BOARD (FLEX

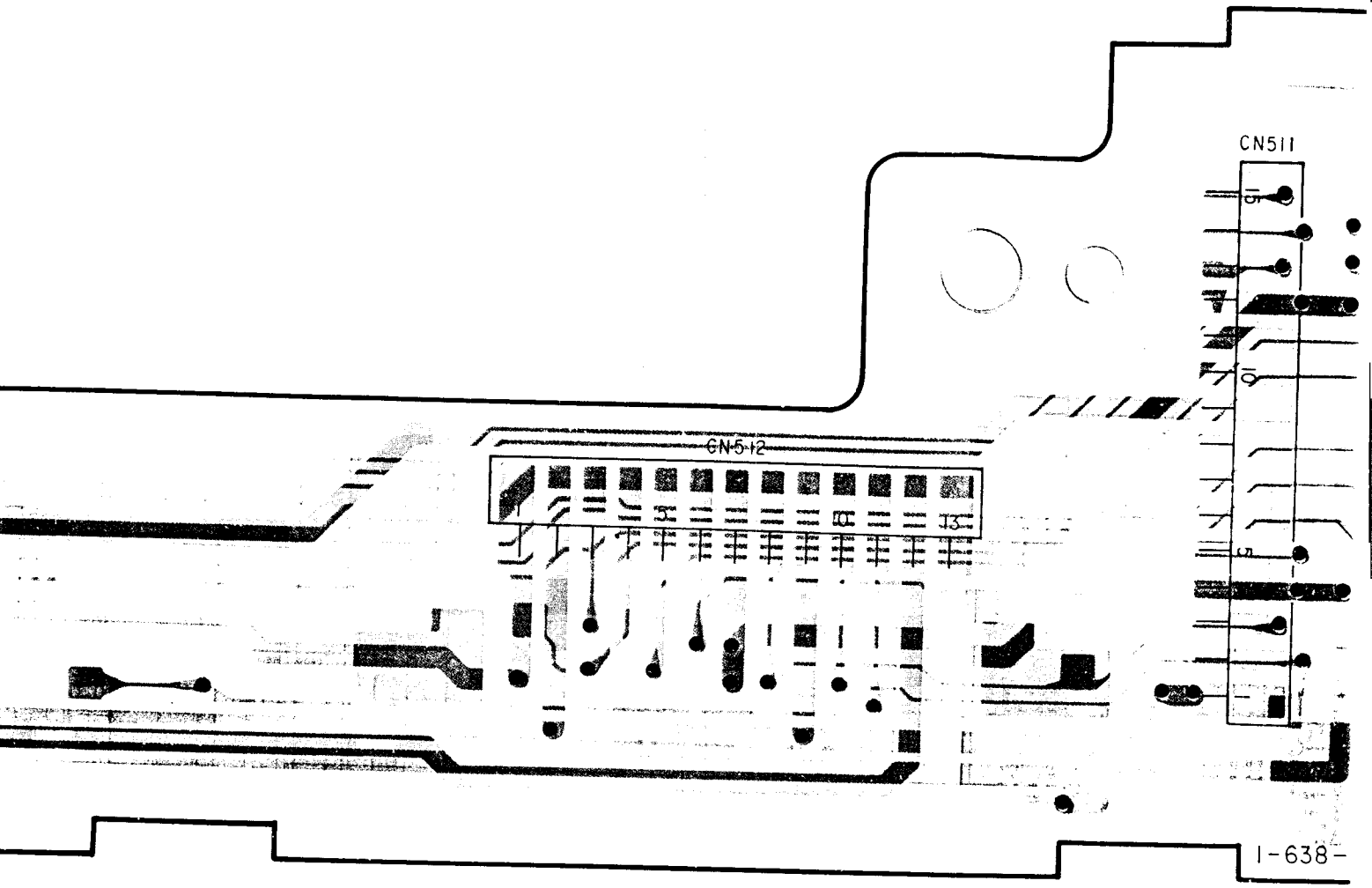

P-90 BOARD (FLEXIBLE)

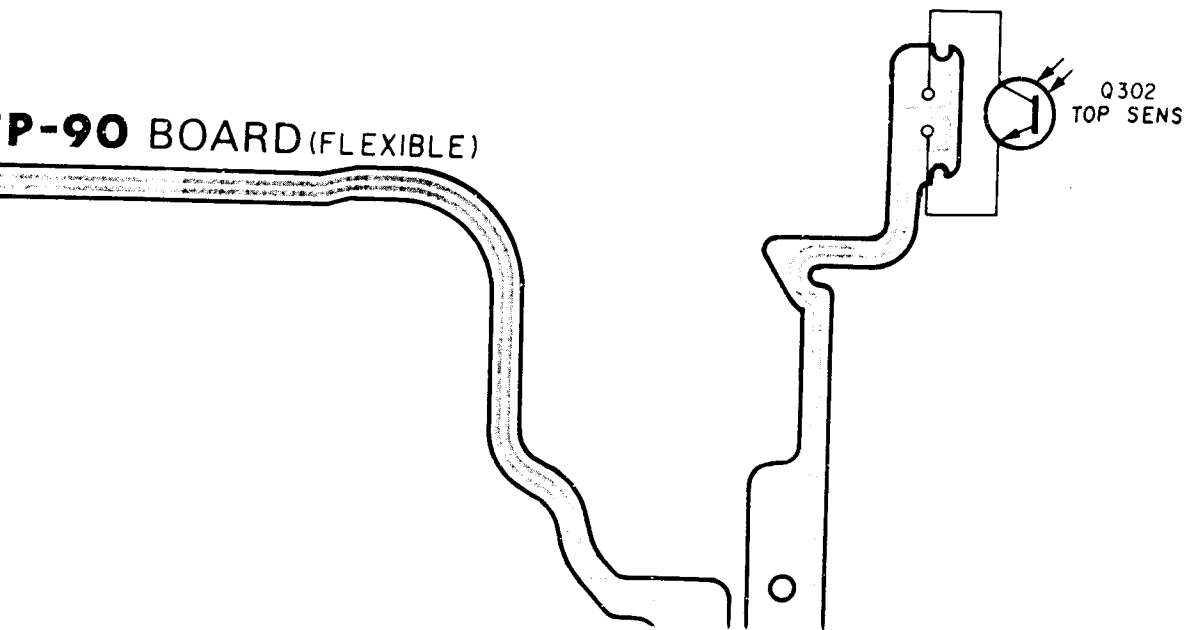

* 1-628-061-12

D302	8-719
D303	8-719
Q302	8-729

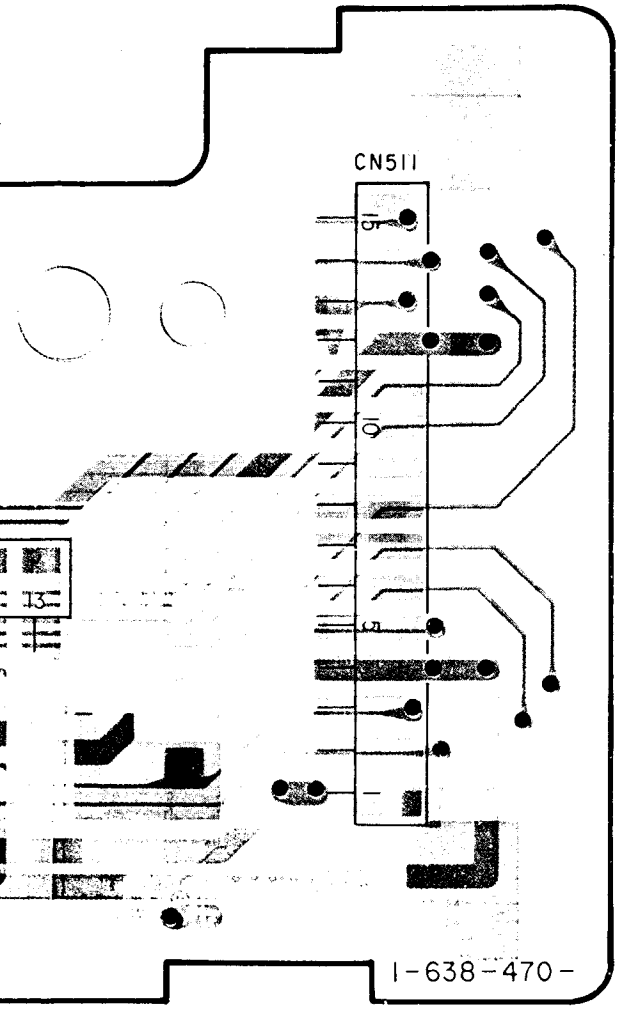

For Service Manuals Contact
MAURITRON TECHNICAL SERVICES
8 Cherry Tree Rd, Chinnor
Oxon OX9 4QY
Tel:- 01844-351694 Fax:- 01844-352554
Email:- enquiries@mauritron.co.uk

Q302
TOP SENS

* 1-628-061-12 FP-90 FLEXIBLE BOARD
****
(Ref. No 12,000 Series)

< DIODE >

D302	8-719-940-81	DIODE GL452S
D303	8-719-820-44	PHOTO COUPLER TLP907

< TRANSISTOR >

Q302	8-729-906-48	TRANSISTOR EE-TP109

* 1-628-060-12 FP-89 FLEXIBLE BOARD

****

(Ref. No 11, 0C

< DIODE >

D301 8-719-820-44 PHOTO COUPLER TLP907

< TRANSISTOR >

Q301 8-729-906-48 TRANSISTOR EE-TP109

TAPE SENSOR TA

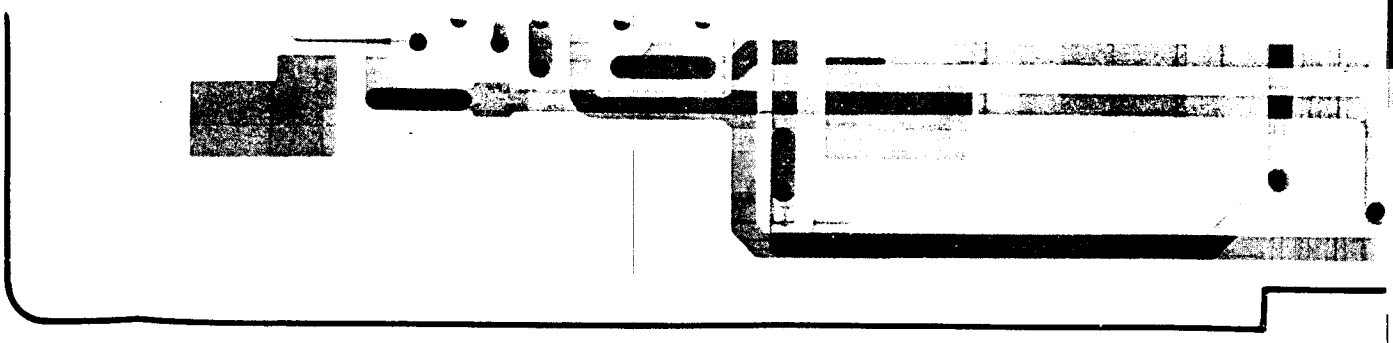

For Service Manuals Contact
MAURITRON TECHNICAL SERVICES
8 Cherry Tree Rd, Chinnor
Oxon OX9 4QY
Tel:- 01844-351694 Fax:- 01844-352554
Email:- enquiries@mauritron.co.uk

-628-060-12 FP-89 FLEXIBLE BOARD

****

(Ref. No 11,000 Series)

< DIODE >

1 8-719-820-44 PHOTO COUPLER TLP907

< TRANSISTOR >

1 8-729-906-48 TRANSISTOR EE-TP109

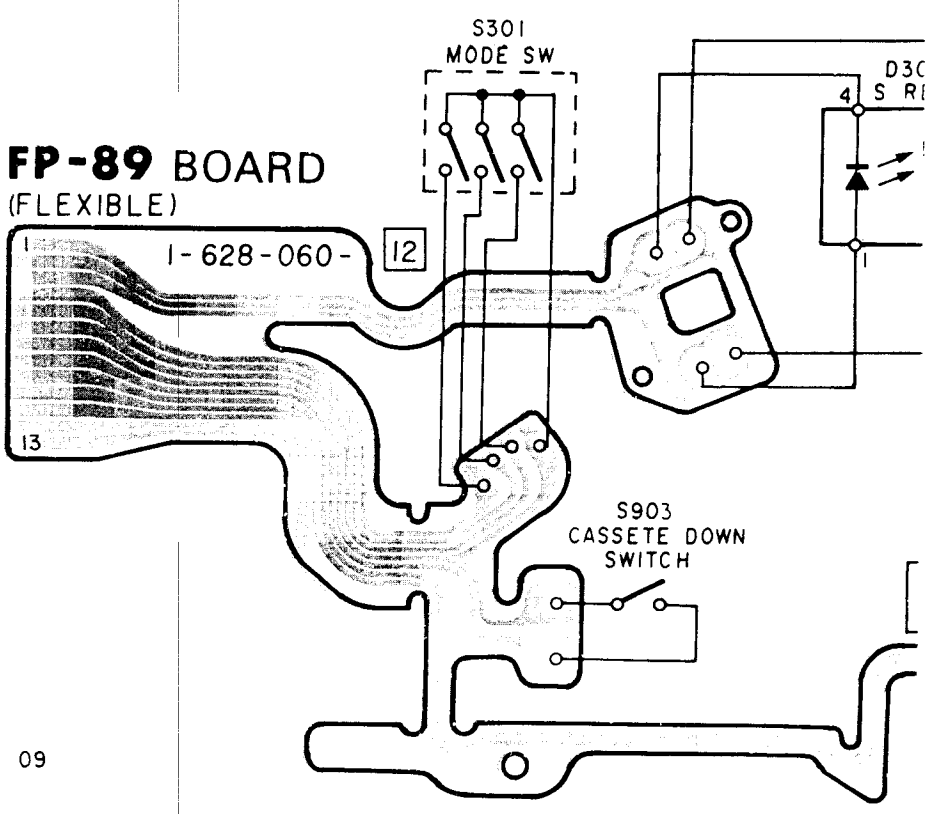

09

PE SENSOR TAPE SENSOR

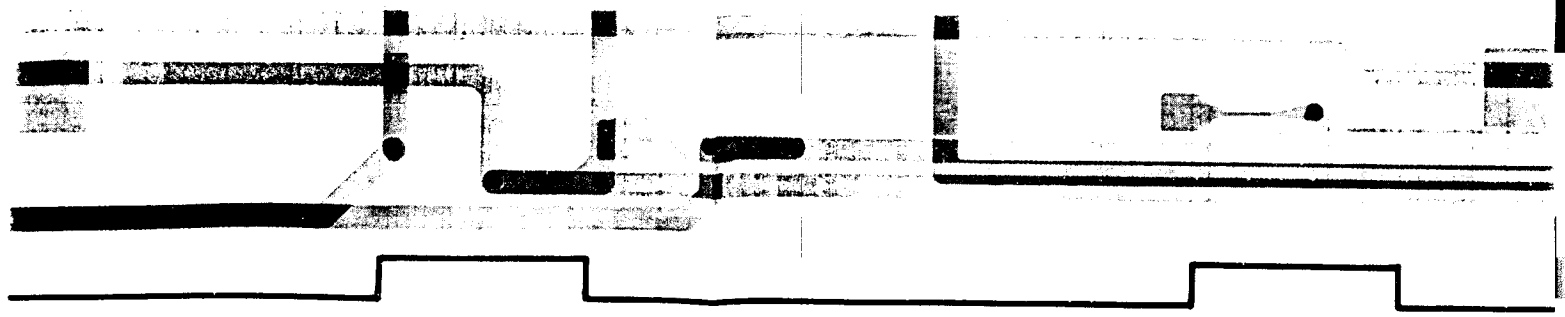

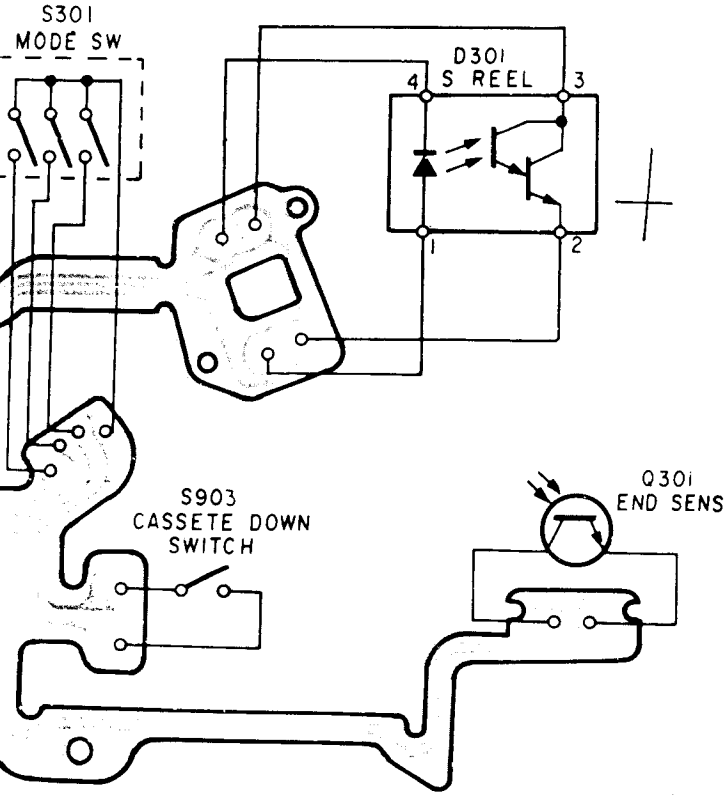
S301
MODE SW
D301
S REEL
4
3
1
2
S903
CASSETE DOWN
SWITCH
Q301
END SENS

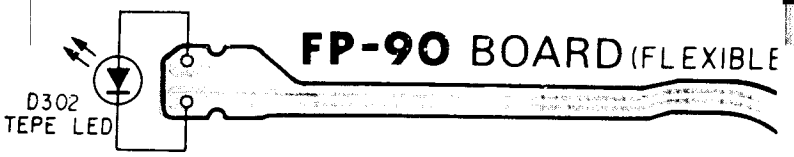
FP-90 BOARD (FLEXIBLE
D302
TEPE LED

RE(

TAPE

:P-90 BOARD (FLEXIBLE)

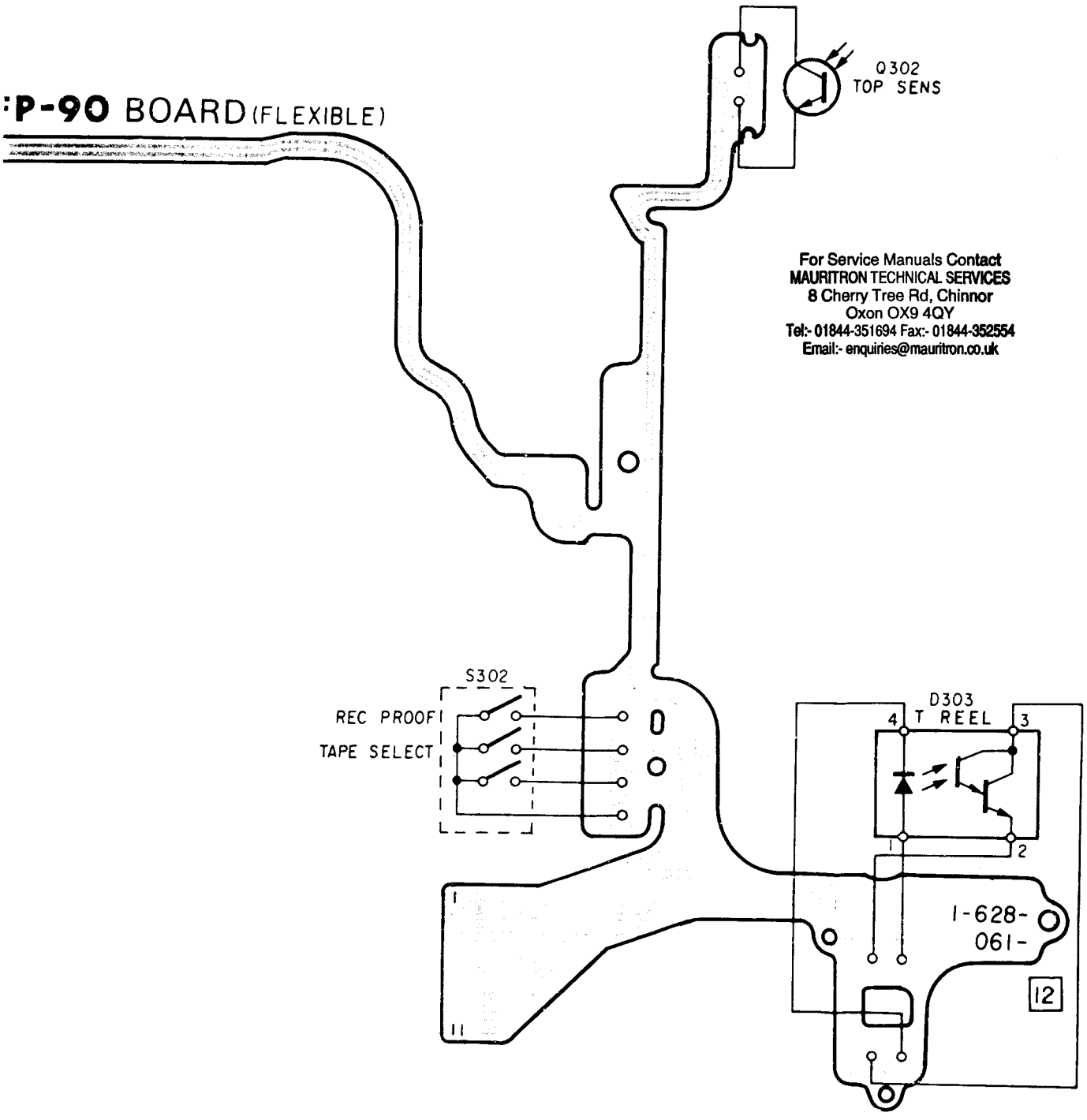

* 1-628-061-12 F
*

For Service Manuals Contact
MAURITRON TECHNICAL SERVICES
8 Cherry Tree Rd, Chinnor
Oxon OX9 4QY
Tel:- 01844-351694 Fax:- 01844-352554
Email:- enquiries@mauritron.co.uk

D302	8-719-
D303	8-719-
Q302	8-729-

TAPE SENSOR **TAPE SENSOR**

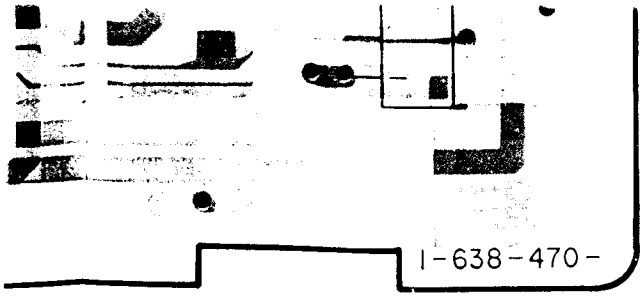

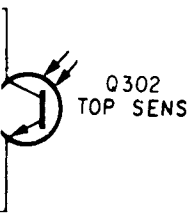

* 1-628-061-12 FP-90 FLEXIBLE BOARD
****
(Ref. No 12,000 Series)

< DIODE >

D302	8-719-940-81	DIODE GL452S
D303	8-719-820-44	PHOTO COUPLER TLP907

< TRANSISTOR >

Q302	8-729-906-48	TRANSISTOR EE-TP109

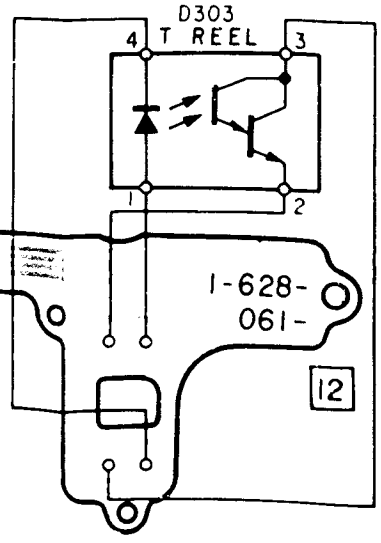

R TAPE SENSOR

— Ref. No. CC-61 BOARD: 10000 series, FP-89 BOARD: 11000 series, FP-90 BOARD: 12000 series —

For Service Manuals Contact
MAURITRON TECHNICAL SERVICES
8 Cherry Tree Rd, Chinnor
Oxon OX9 4QY
Tel:- 01844-351694 Fax:- 01844-352554
Email:- enquiries@mauritron.co.uk

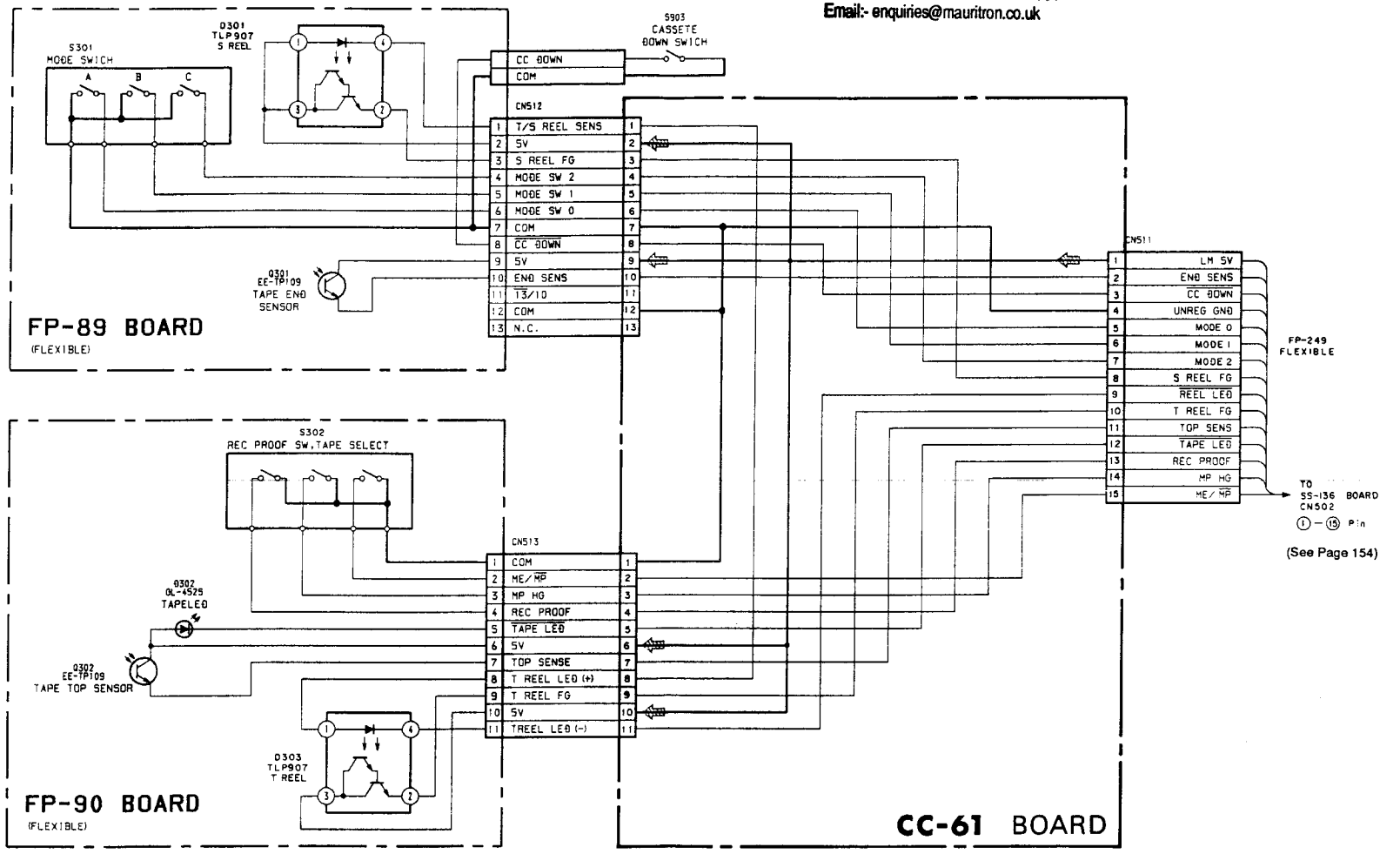

09

(See Page 154)

For Service Manuals Contact
MAURITRON TECHNICAL SERVICES
8 Cherry Tree Rd, Chinnor
Oxon OX9 4QY
Tel:- 01844-351694 Fax:- 01844-352554
Email:- enquiries@mauritron.co.uk

VK-16 (VTR FUNCTION SWITCH), DK-12 (SIRCS CONTROL, TITLER SWITCH), CK-49 (CAMERAFUNCTION SWITCH)

— Ref. No. VK-16 BOARD: 4000 series, DK-12 BOARD: 5000 series, CK-49 BOARD: 5000 series, LI-36 BOARD: 6000 series, ZK-13 BOARD: 5000 series —

CK-49 BOARD (COMPONENT SIDE)

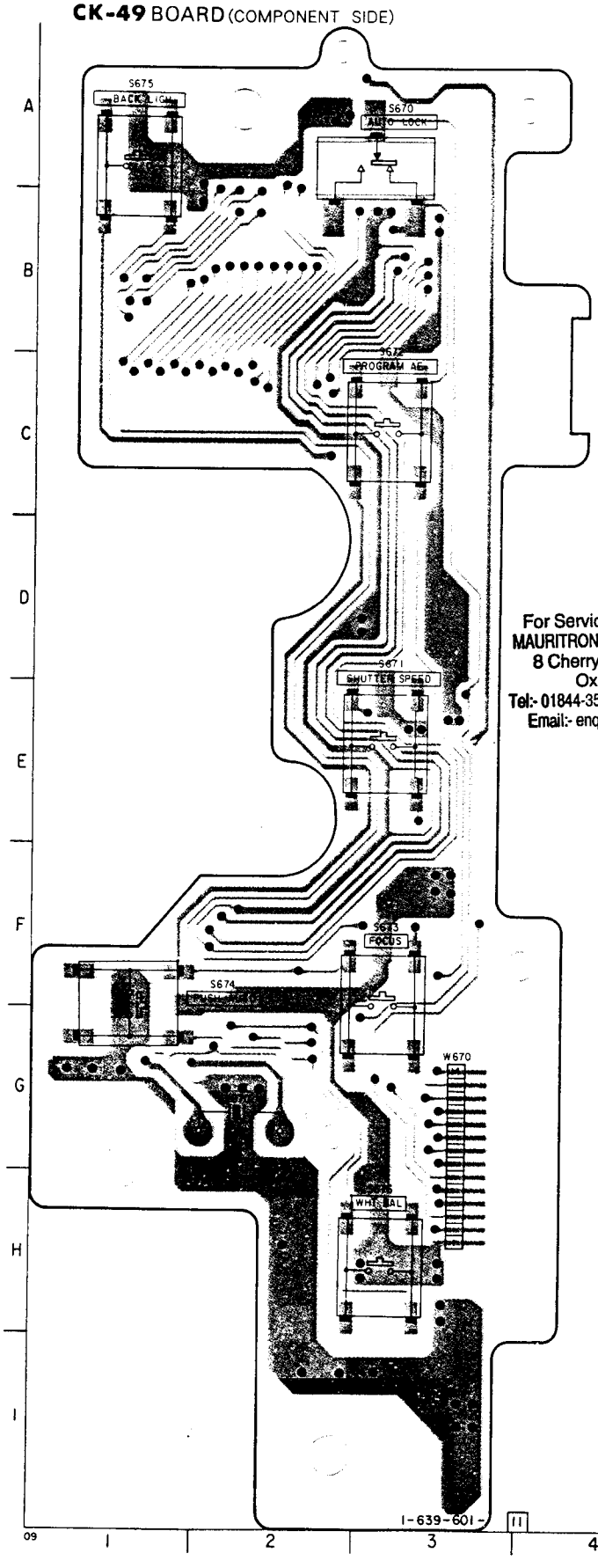

CK-49 BOARD (CONDUCTOR SIDE)

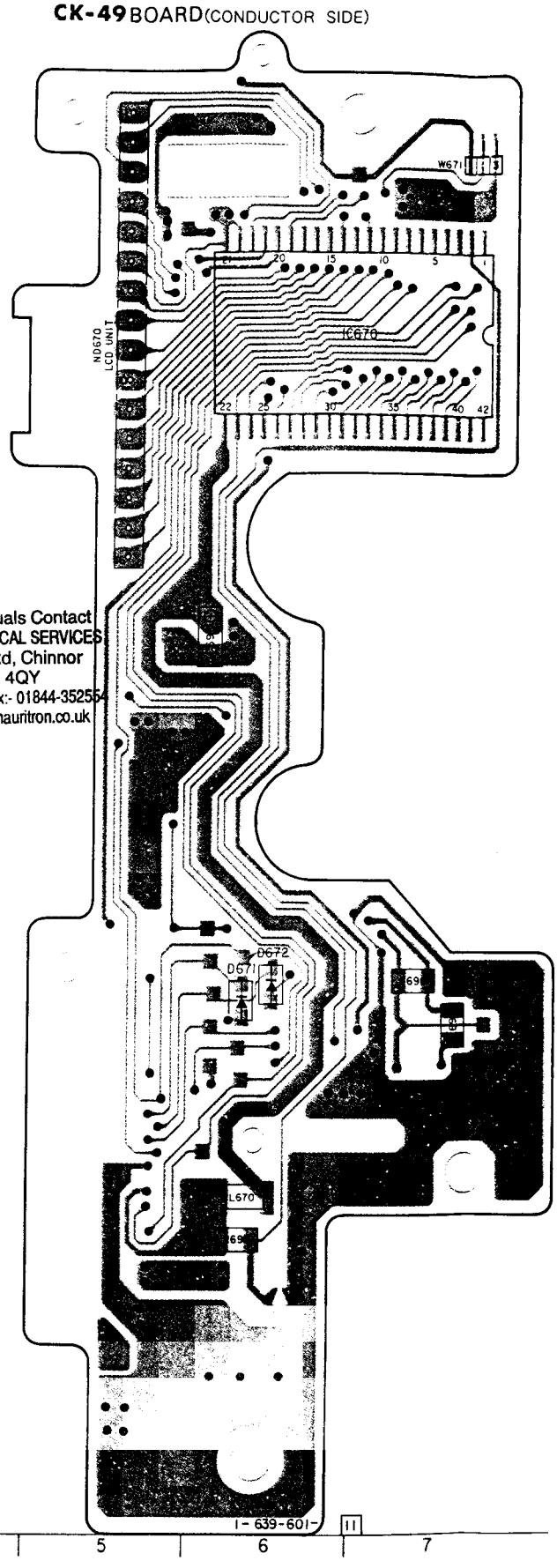

For Service Manuals Contact
MAURITRON TECHNICAL SERVICES
8 Cherry Tree Rd, Chinnor
Oxon OX9 4QY
Tel:- 01844-351694 Fax:- 01844-352554
Email:- enquiries@mauritron.co.uk

CK-49 BOARD (CONDUCTOR SIDE)

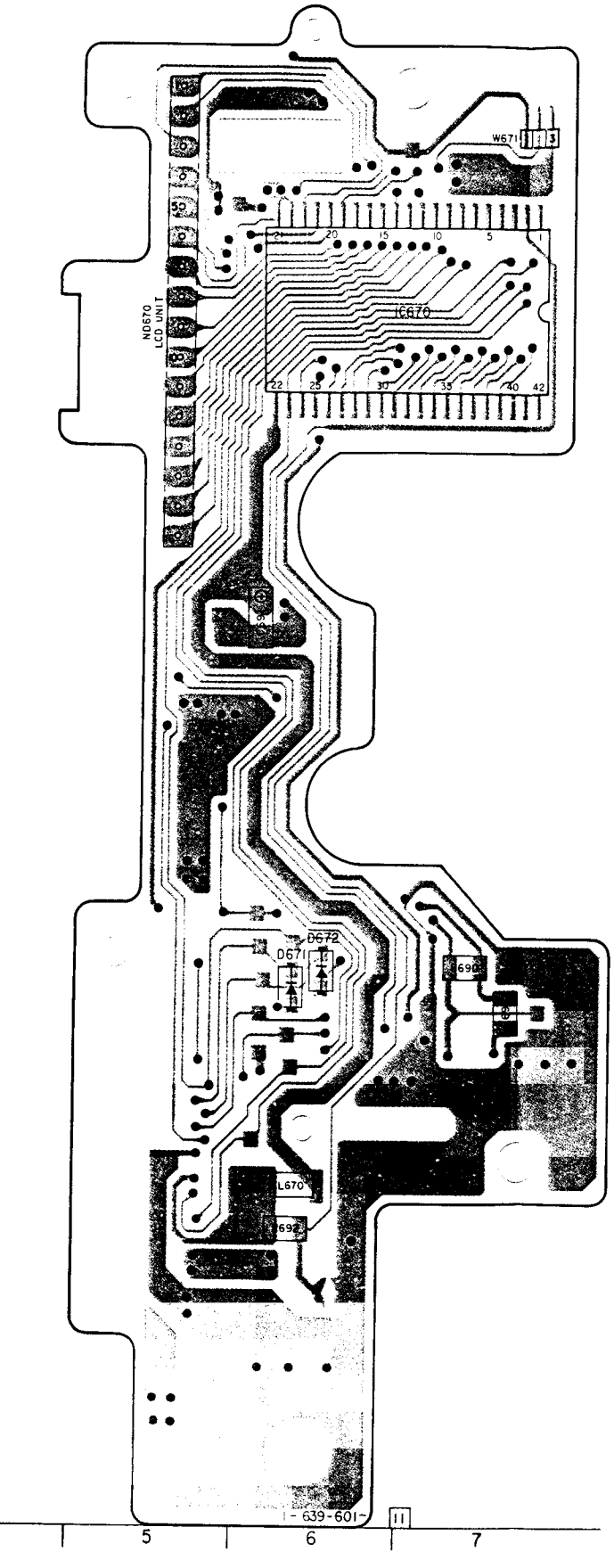

DK-12 BOARD (CONDUCTOR SIDE)

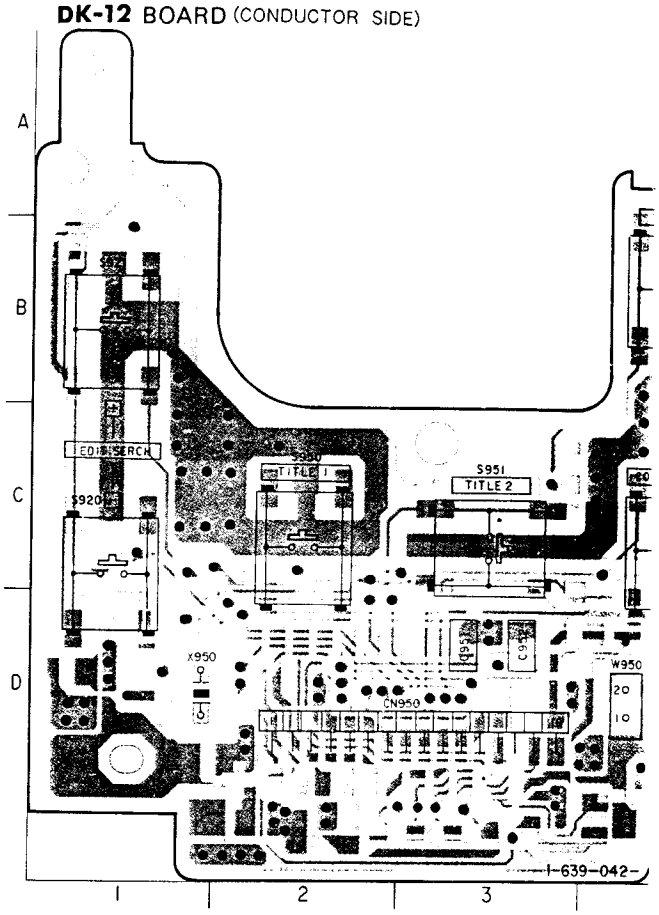

VK-16 BOARD (CONDUCTOR SIDE)

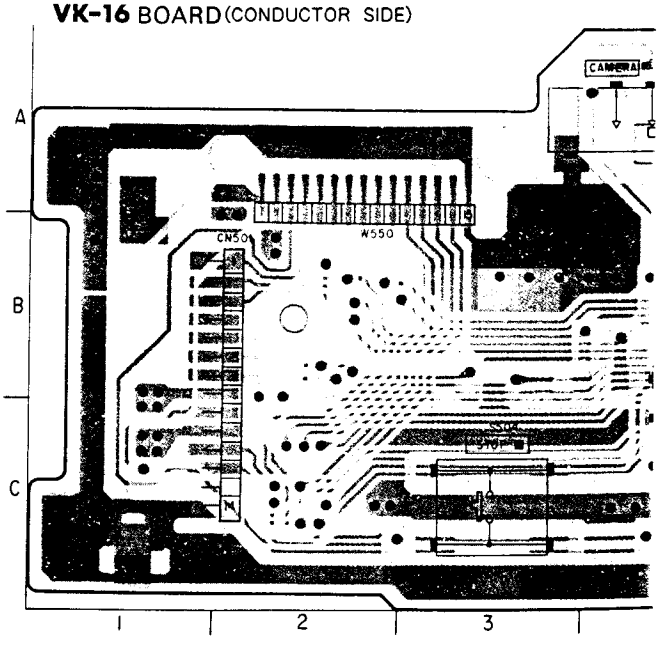

DK-12 BOARD (CONDUCTOR SIDE)

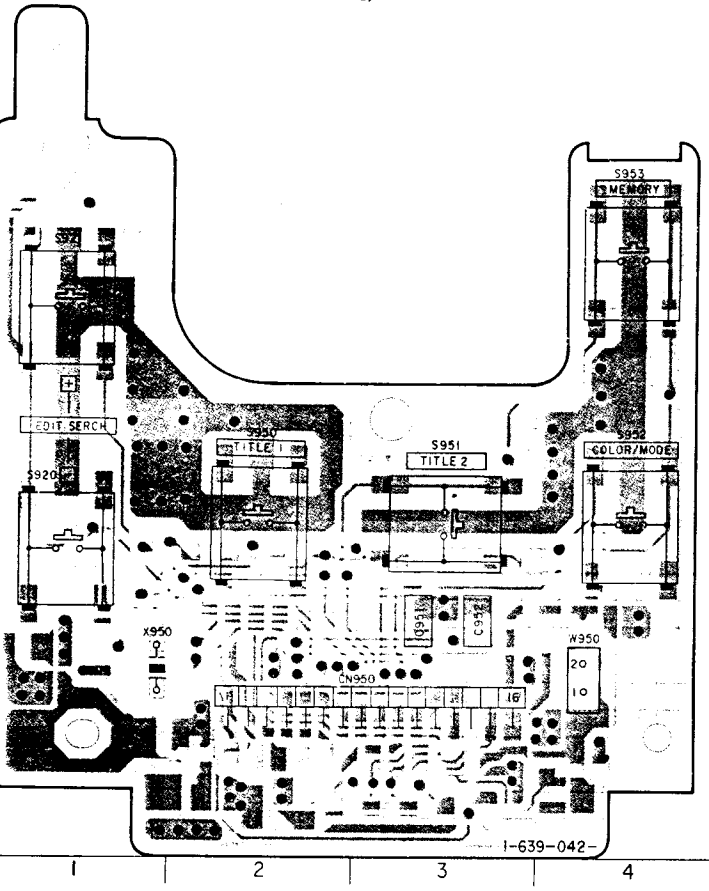

DK-12 BOARD (CONDUCTOR SIDE)

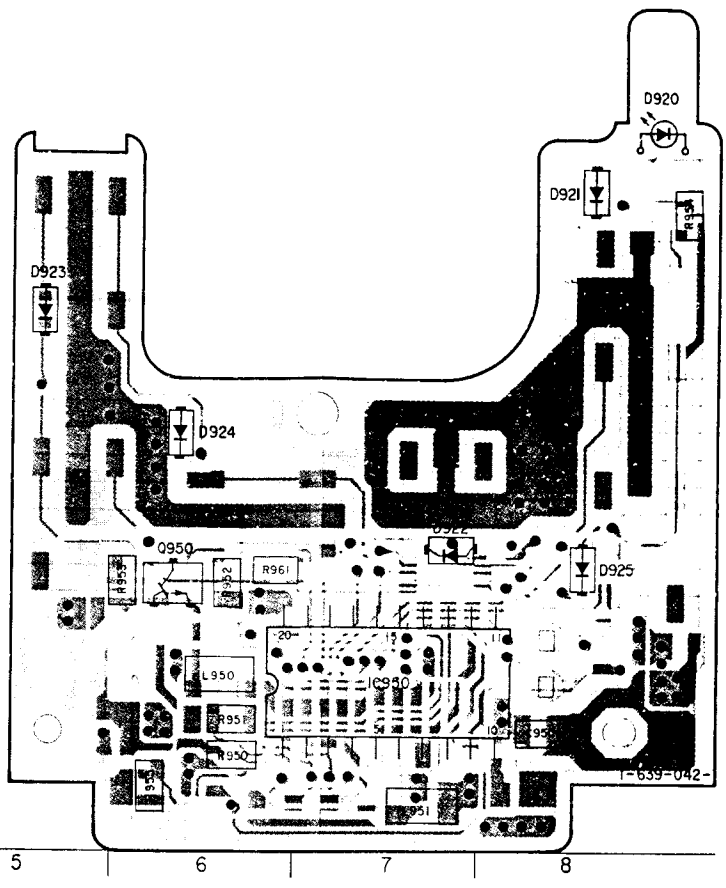

1 2 3 4 21 5 6 7 8

For Service Manuals Contact
MAURITRON TECHNICAL SERVICES
8 Cherry Tree Rd, Chinnor
Oxon OX9 4QY
Tel:- 01844-351694 Fax:- 01844-352554
Email:- enquiries@mauritron.co.uk

VK-16 BOARD (CONDUCTOR SIDE)

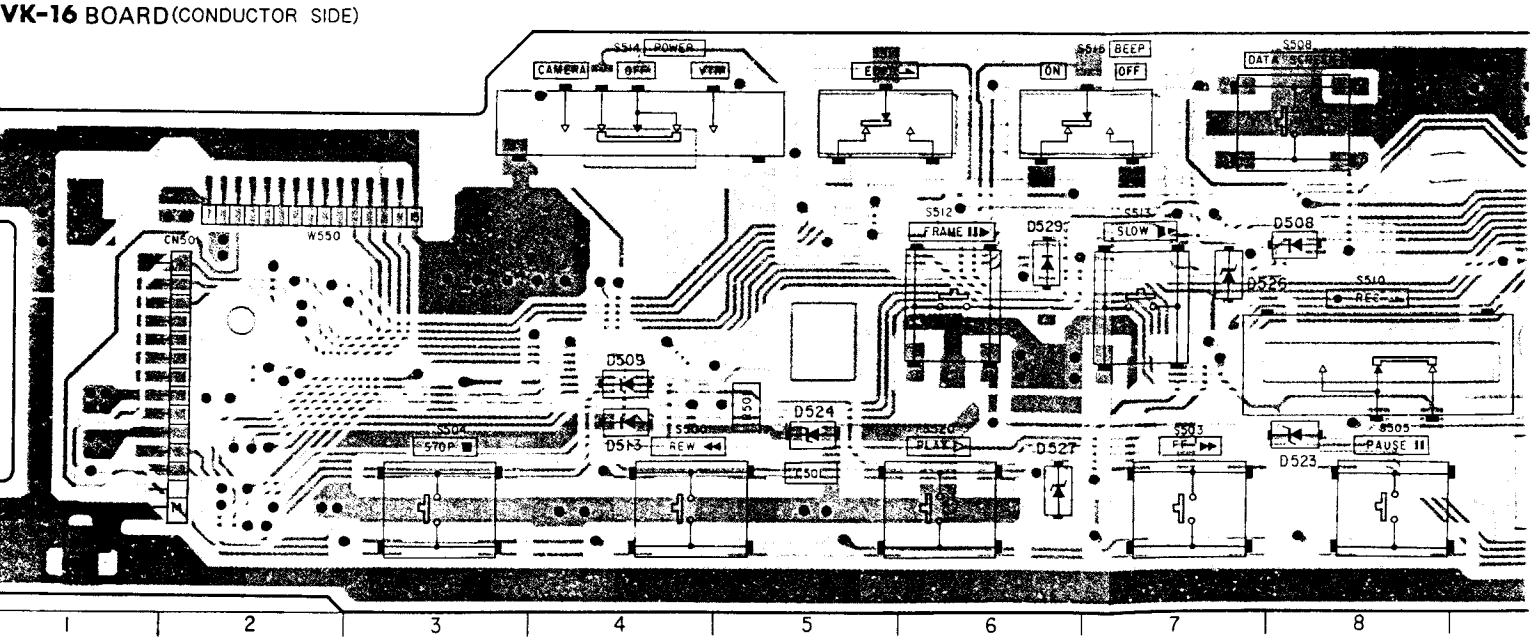

1 2 3 4 5 6 7 8

DUCTOR SIDE)

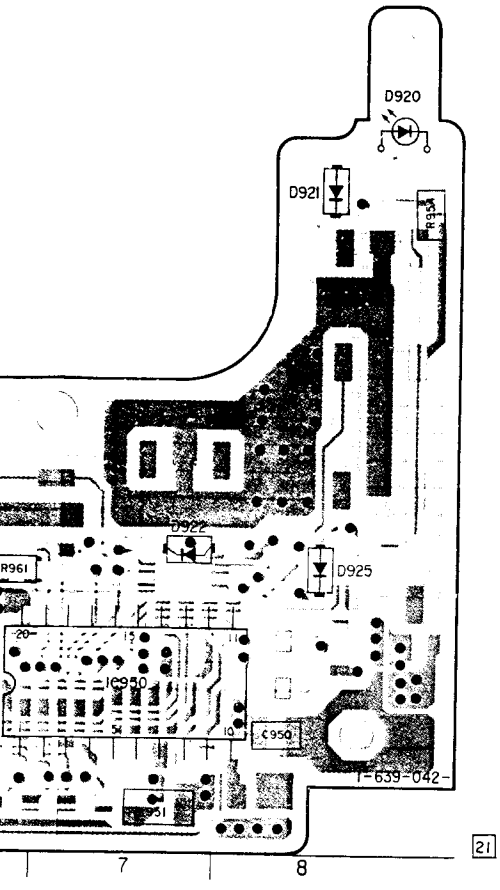

LI-36 BOARD (CONDUCTOR SIDE)

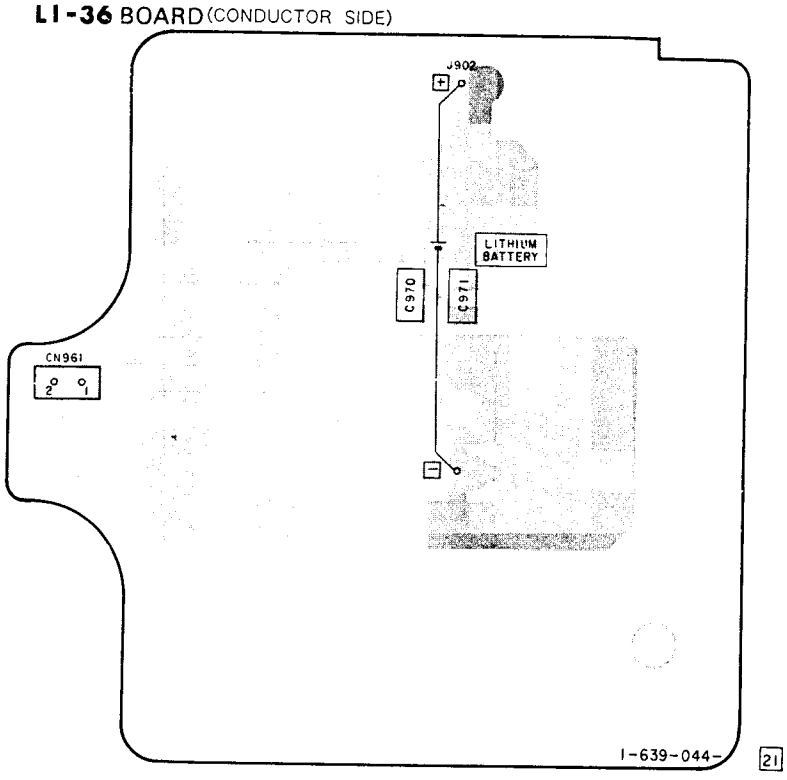

For Service Manuals Contact
MAURITRON TECHNICAL SERVICES
8 Cherry Tree Rd, Chinnor
Oxon OX9 **4QY**
Tel:- 01844-351694 Fax:- 01844-352554
Email:- enquiries@mauritron.co.uk

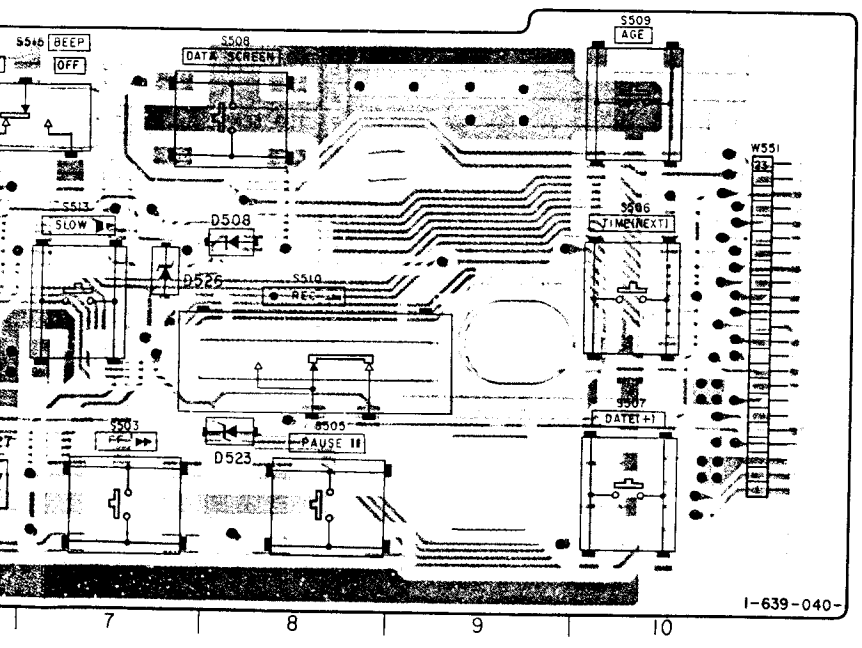

ZK-13 BOARD (COMPONENT SIDE)

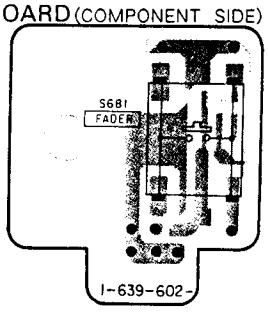

ZK-13 BOARD (CONDUCTOR SIDE)

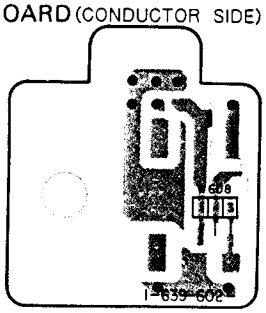

For Service Manuals Contact
MAURITRON TECHNICAL SERVICES
8 Cherry Tree Rd, Chinnor
Oxon OX9 4QY
Tel:- 01844-351694 Fax:- 01844-352554
Email:- enquiries@mauritron.co.uk

* A-7062-278-A VF-26P BOARD, COMPLETE (TYPE 1)
****
(Ref. No 7,000 Series)

< DIODE >

D670	8-719-404-46	DIODE	MA110
D903	8-719-400-20	DIODE	MA152WA
D955	8-719-404-19	DIODE	LN1251C

< IC >

IC901	8-759-420-01	IC	AN2512S

< TRANSISTOR >

Q903	8-729-106-68	TRANSISTOR	2SD1615A
Q904	8-729-216-31	TRANSISTOR	2SA1163G

* A-7062-278-A VF-26P BOARD, COMPLETE (TYPE 2)
****
(Ref. No 8,000 Series)

< DIODE >

D670	8-719-404-46	DIODE	MA110
D903	8-719-400-20	DIODE	MA152WA
D955	8-719-404-19	DIODE	LN1251C

< IC >

IC901	8-759-511-01	IC	BA7147F
IC901	8-759-514-91	IC	XRA7147F

< TRANSISTOR >

Q903	8-729-106-68	TRANSISTOR	2SD1615A
Q903	8-729-420-81	TRANSISTOR	2SD874A
Q903	8-729-420-84	TRANSISTOR	2SD874A
Q904	8-729-216-31	TRANSISTOR	2SA1163G
Q904	8-729-216-32	TRANSISTOR	2SA1163L

A
B
C
D
09

ef. No. VF-26 BOARD: TYPE 1 7000 series, TYPE 2 8000 series, VF-27 BOARD: 9000 series —

For Service Manuals Contact
MAURITRON TECHNICAL SERVICES
8 Cherry Tree Rd. Chinnor
Oxon OX9 4QY
Tel:- 01844-351694 Fax:- 01844-352554
Email:- enquiries@mauritron.co.uk

VF-26 BOARD (COMPONENT SIDE)

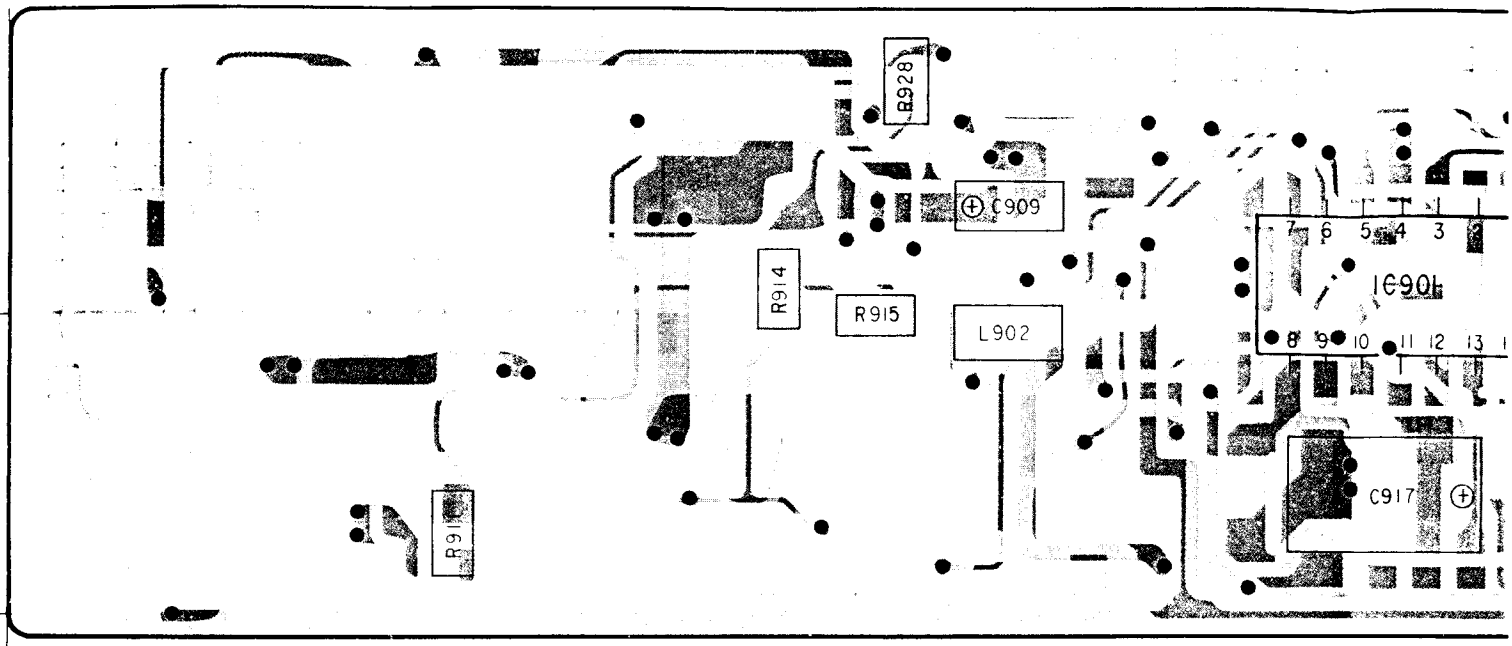

VF-26 BOARD (CONDUCTOR SIDE)

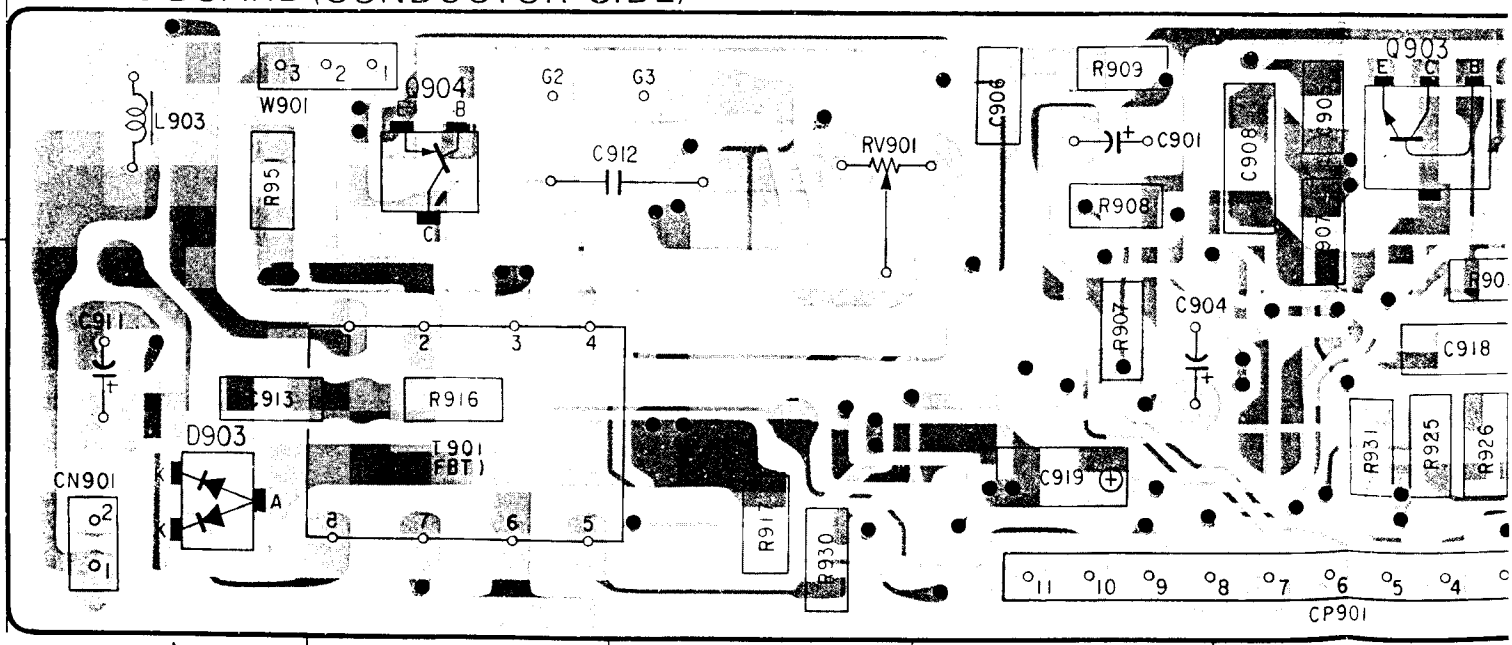

09 1 2 3 4 5

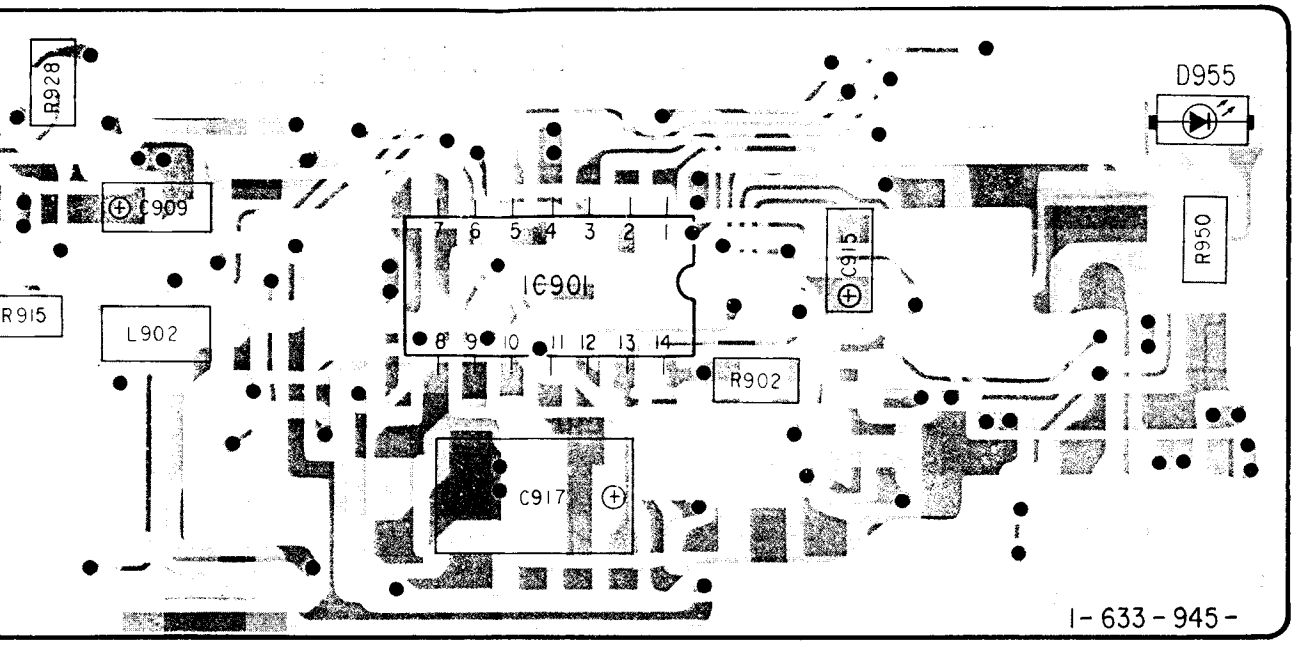
R928
C909
R915
L902
IC901
C915
R902
C917
D955
R950
1-633-945-

11

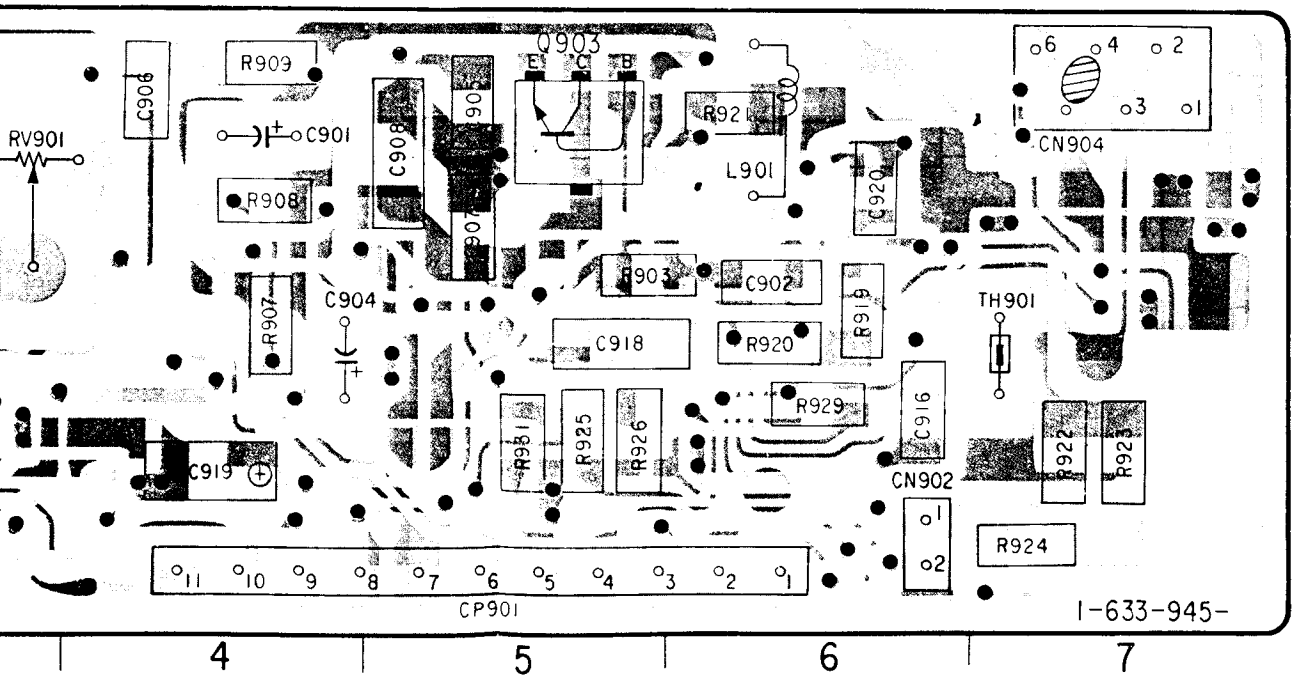
RV901
C906
R909
C901
R908
C908
Q903
E C B
R921
L901
C920
CN904
R903
C902
R919
TH901
R907
C904
C918
R920
R929
C916
R931
R925
R926
C919
CN902
R922
R923
R924
CP901
1-633-945-

11

4 5 6 7

* A-7062-278-A VF-27P BOARD, COMPLETE
****
(Ref. No 9,000 Series)

< DIODE >

D903	8-719-400-20	DIODE	MA152WA
D955	8-719-404-19	DIODE	LN1251C

< IC >

IC901	8-759-420-01	IC	AN2511S

< TRANSIS

Q903	8-729-216-31	TRANSISTO
Q904	8-729-100-66	TRANSISTO
Q905	8-729-106-68	TRANSISTO

For Service Manuals Contact
MAURITRON TECHNICAL SERVICES
8 Cherry Tree Rd, Chinnor
Oxon OX9 4QY
Tel:- 01844-351694 Fax:- 01844-352554
Email:- enquiries@mauritron.co.uk

VF-27 BOARD (COMPONENT SIDE)

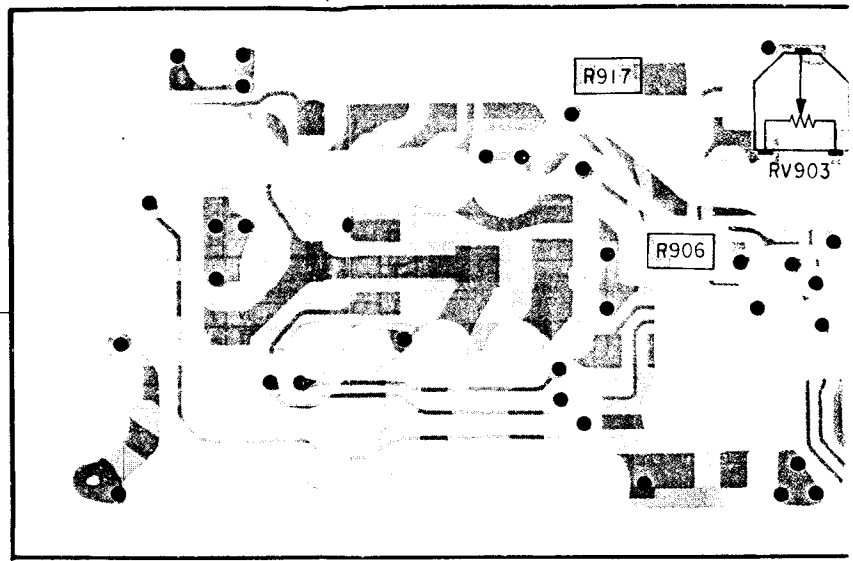

VF-27 BOARD (CONDUCTOR SIDE)

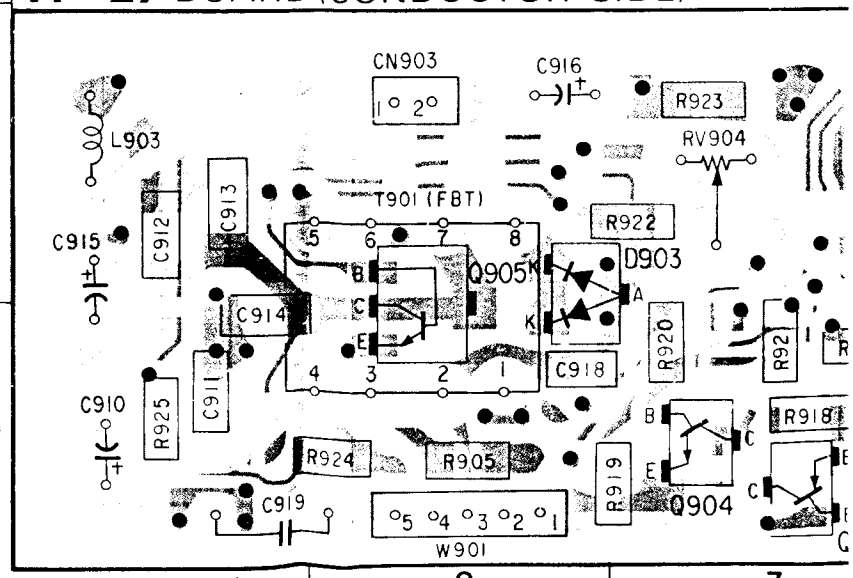

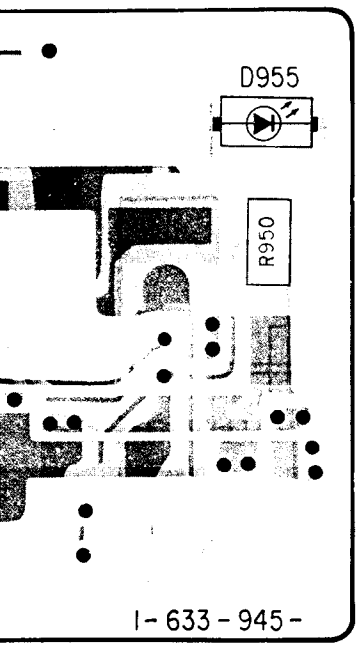

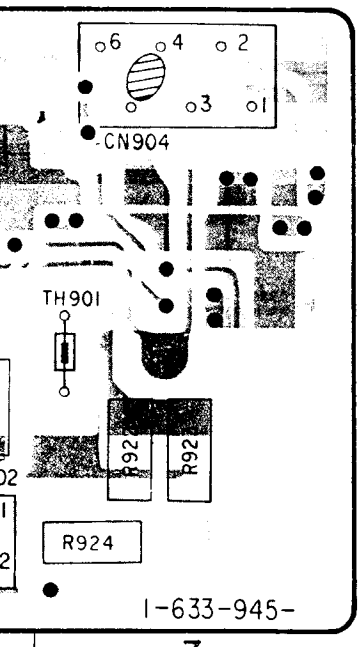

VIEW FINDER VIEW FINDER

OMPLETE
****
Ref. No 9,000 Series)

> < TRANSISTOR >

MA152WA	Q903	8-729-216-31 TRANSISTOR	2SA1163G
LN1251C	Q904	8-729-100-66 TRANSISTOR	2SC1623
	Q905	8-729-106-68 TRANSISTOR	2SD1615A

2512S

(COMPONENT SIDE)

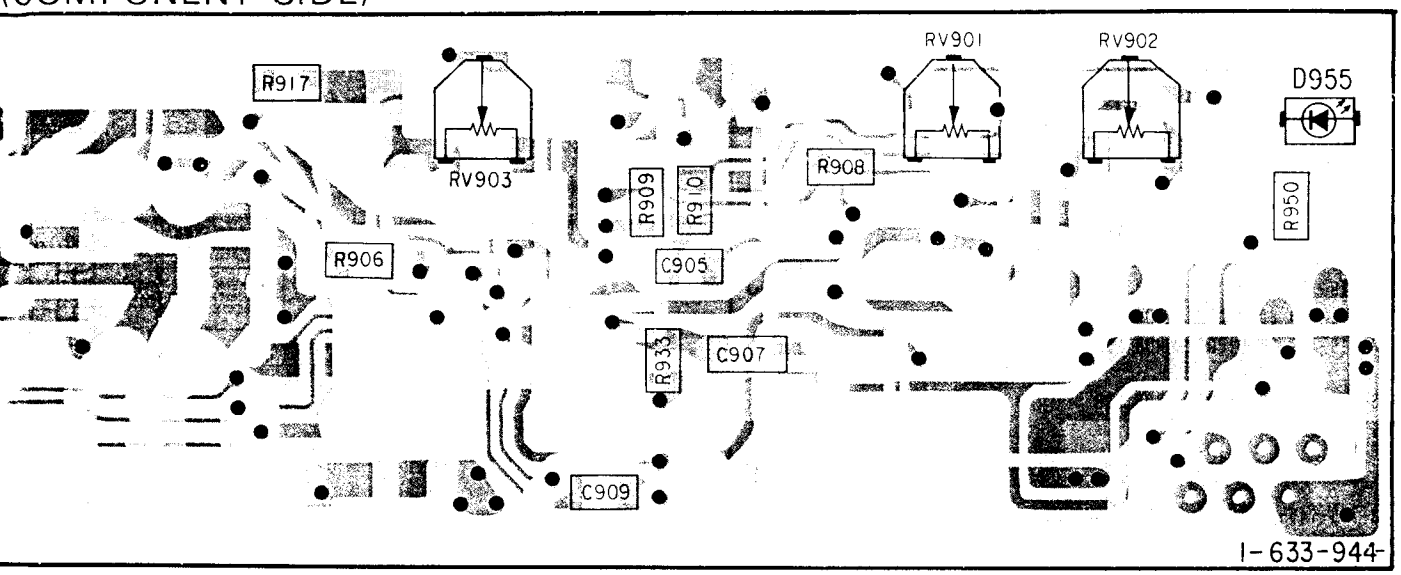

(CONDUCTOR SIDE)

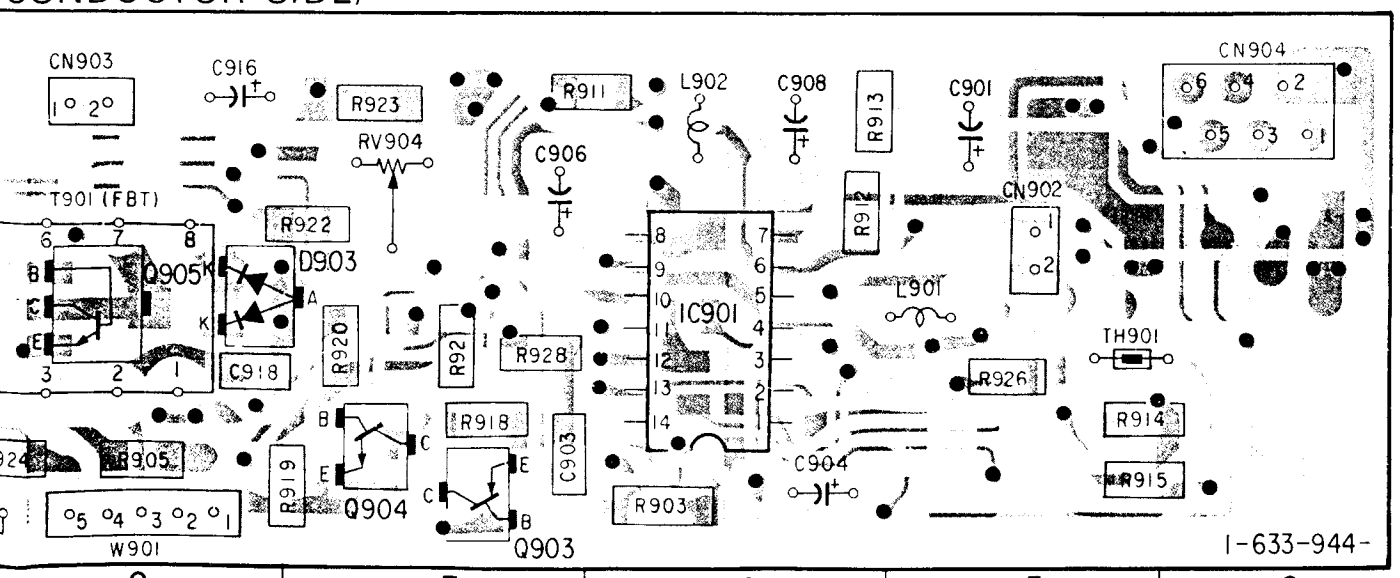

— Ref. No. VF-26 BOARD: TYPE 1 7000 series, TYPE 2 8000 series, VF-27 BOAFD: 9000 series —

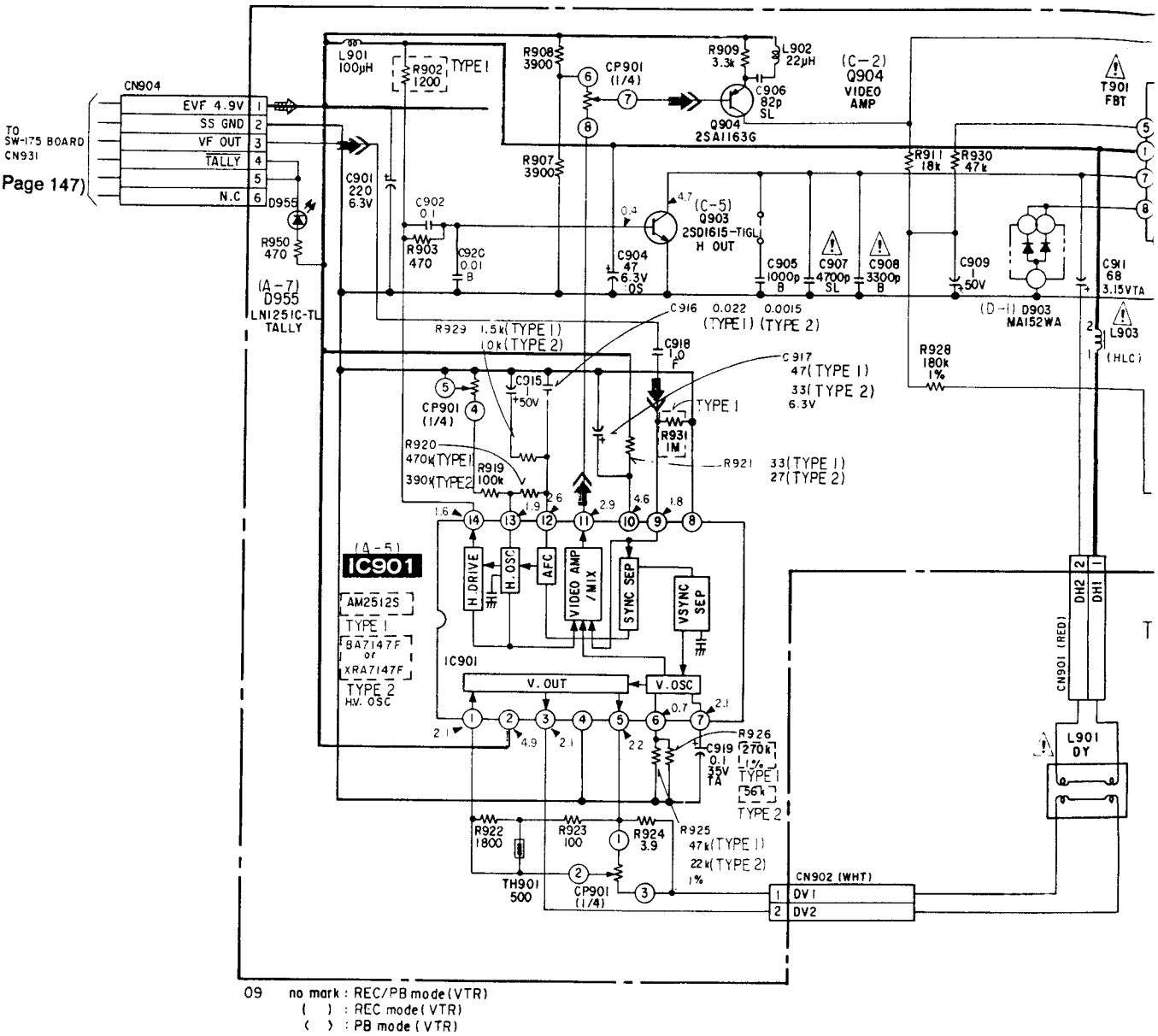

09 no mark : REC/PB mode (VTR)
( ) : REC mode (VTR)
( ) : PB mode (VTR)

For Service Manuals Contact
MAURITRON TECHNICAL SERVICES
8 Cherry Tree Rd, Chinnor
Oxon OX9 4QY
Tel:- 01844-351694 Fax:- 01844-352554
Email:- enquiries@mauritron.co.uk

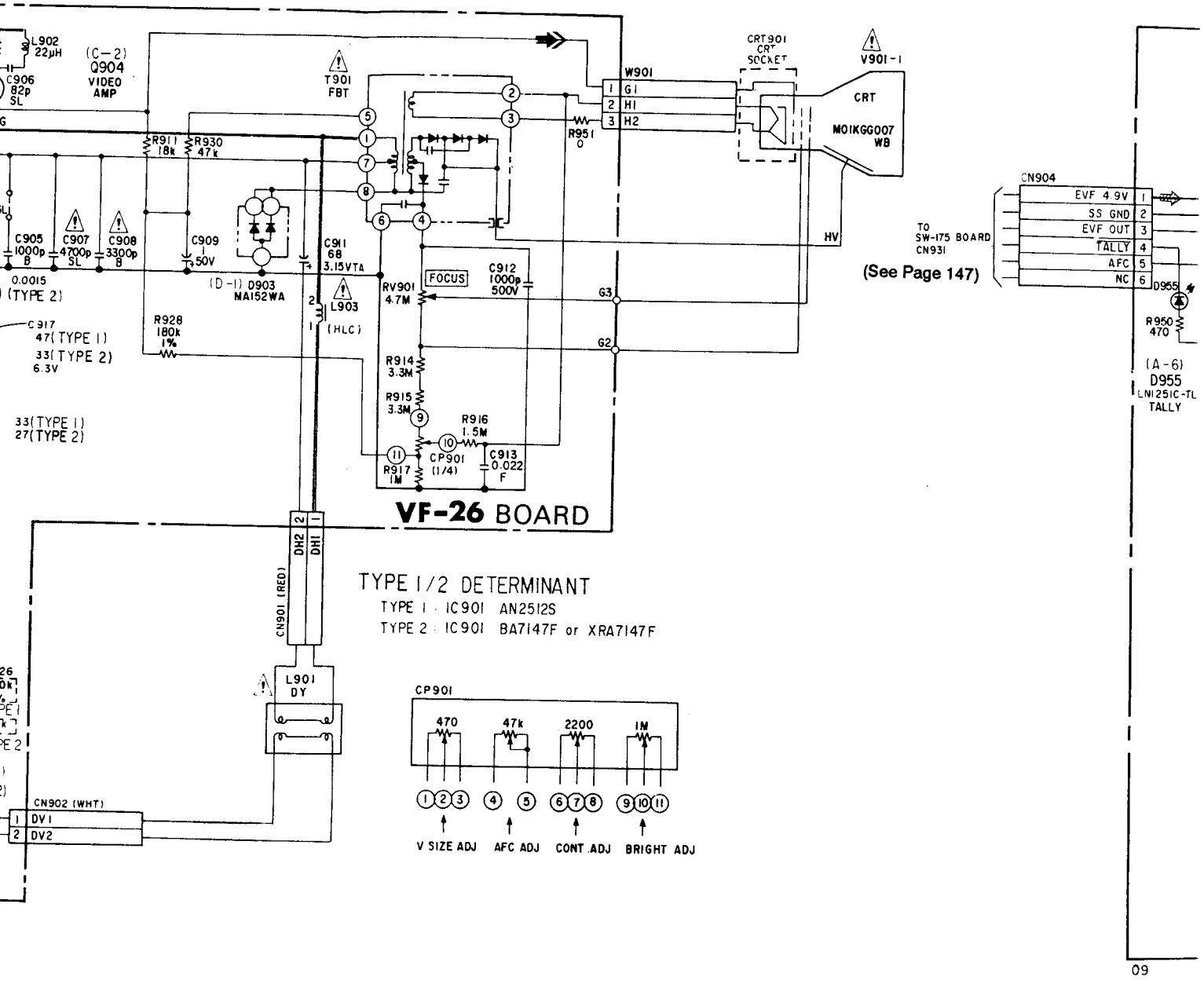

• **SIGNAL PATH**

	VIDEO SIGNAL			AUDIO SIGNAL
	CHROMA	Y	Y/CHROMA/DATA	
REC		➡		
PB				

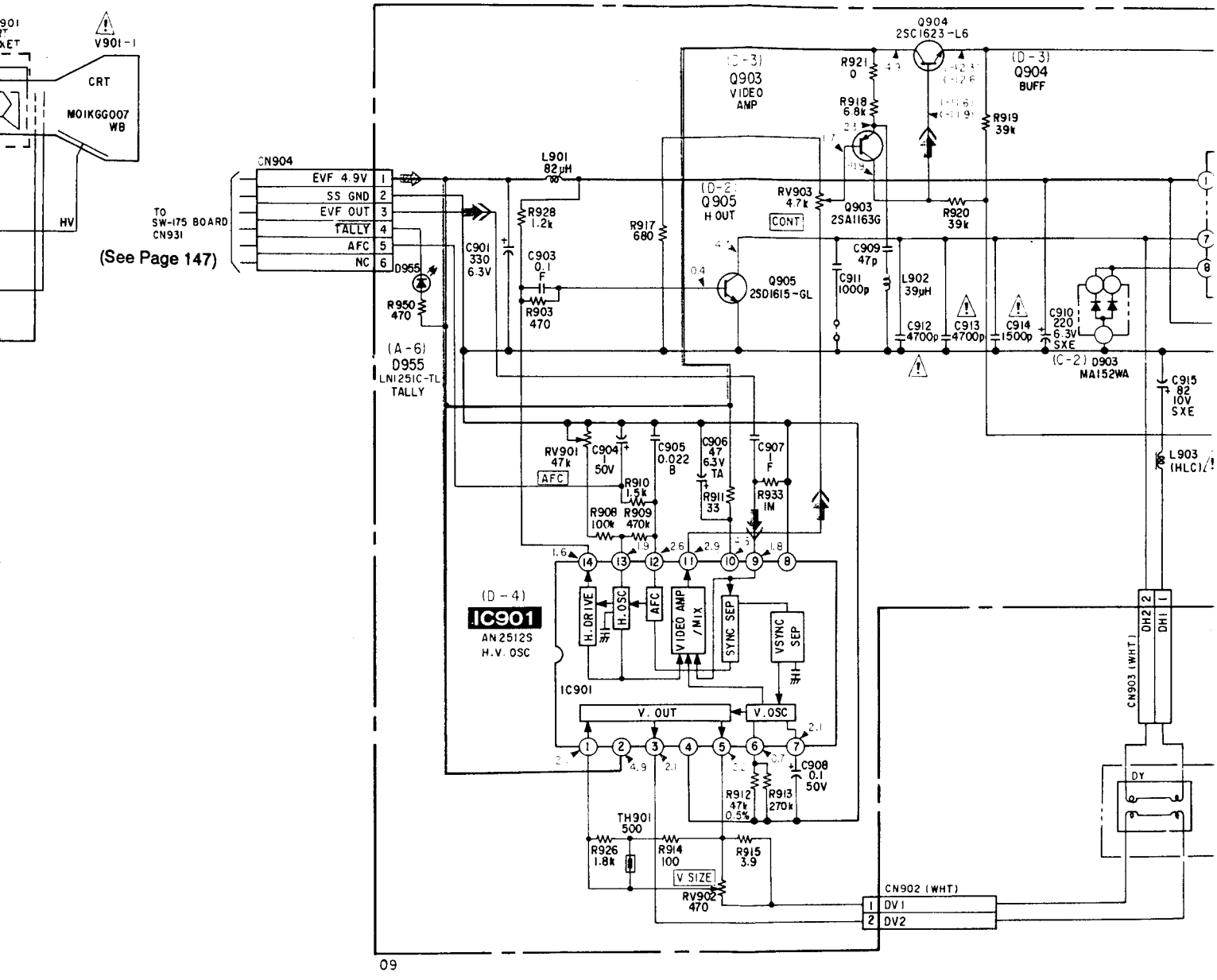

L PATH

VIDEO SIGNAL			AUDIO SIGNAL
HROMA	Y	Y/CHROMA/DATA	
	➡		

16 17 18 19 20 21 22

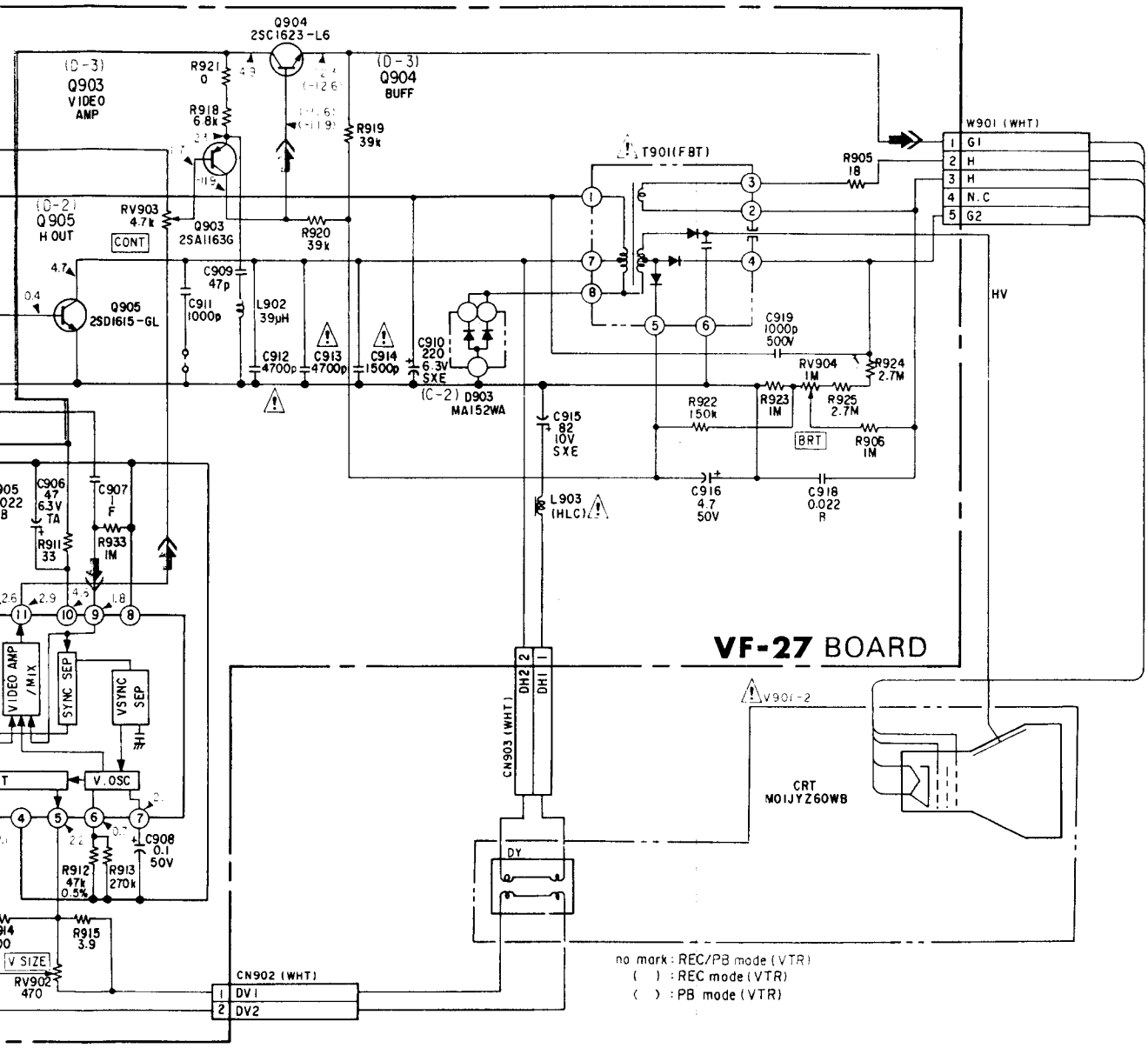

For Service Manuals Contact
MAURITRON TECHNICAL SERVICES
8 Cherry Tree Rd, Chinnor
Oxon OX9 4QY
Tel:- 01844-351694 Fax:- 01844-352554
Email:- enquiries@mauritron.co.uk

F

—

*

D5
D5
D5
D5
D5

D5
D5
D5
D5

IC
IC
IC

For Service Manuals Contact
MAURITRON TECHNICAL SERVICES
8 Cherry Tree Rd, Chinnor
Oxon OX9 4QY
Tel:- 01844-351694 Fax:- 01844-352554
Email:- enquiries@mauritron.co.uk

Q5
Q5
Q9
Q9

— Ref. No. FU-104 BLOCK: 10000 series —

DC/DC CONVERTER board

FU-104 BOARD (COMP

* A-7062-781-A FU-104P BOARD, COMPLETE
****
(Ref. No 10,000 Series)

< DIODE >

D501	8-719-421-27	DIODE	MA728
D503	8-719-404-46	DIODE	MA110
D504	8-719-404-46	DIODE	MA110
D505	8-719-404-46	DIODE	MA110
D506	8-719-404-46	DIODE	MA110
D507	8-719-404-46	DIODE	MA110
D510	8-719-812-41	LED	TLR124, RED
D510	8-719-940-99	DIODE	SLR-34VC3
D511	8-719-404-46	DIODE	MA110

< IC >

IC501	8-759-154-18	IC	uPD75316GF-116-3B9
IC502	8-759-511-22	IC	CXA1448N
IC503	8-759-937-54	IC	S-81250HG-RD

< TRANSISTOR >

Q509	8-729-904-20	TRANSISTOR	FMA2
Q579	8-729-905-12	TRANSISTOR	DTA144EU
Q990	8-729-101-07	TRANSISTOR	2SB798-DLDK
Q991	8-729-905-35	TRANSISTOR	2SC4081

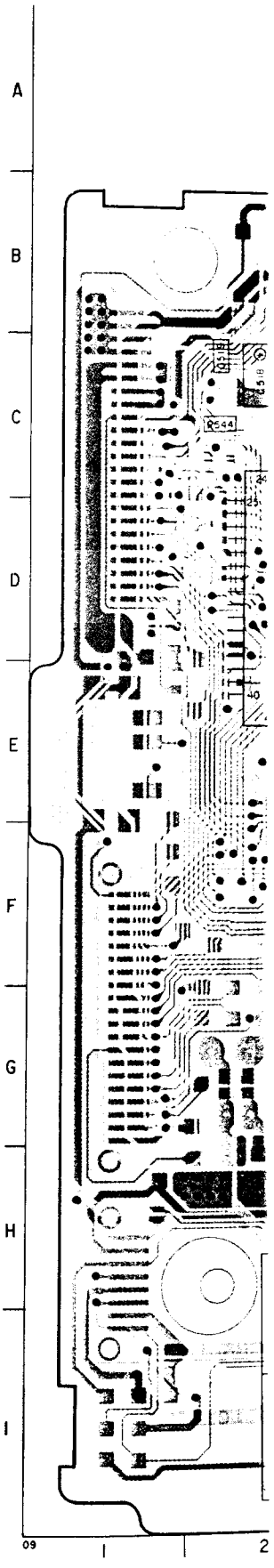

For Service Manuals Contact
MAURITRON TECHNICAL SERVICES
8 Cherry Tree Rd, Chinnor
Oxon OX9 4QY
Tel:- 01844-351694 Fax:- 01844-352554
Email:- enquiries@mauritron.co.uk

CK: 10000 series —

DC/DC CONVERTER board is replaced as a block, so that the PRINTED WIRING BOARD of it is omitted.

FU-104 BOARD (COMPONENT SIDE)

FI

BOARD, COMPLETE
****
(Ref. No 10,000 Series)

< DIODE >

DIODE MA728
DIODE MA110
DIODE MA110
DIODE MA110
DIODE MA110

DIODE MA110
LED TLR124, RED
DIODE SLR-34VC3
DIODE MA110

< IC >

IC uPD75316GF-116-3B9
IC CXA1448N
IC S-81250HG-RD

< TRANSISTOR >

TRANSISTOR FMA2
TRANSISTOR DTA144EU
TRANSISTOR 2SB798-DLDK
TRANSISTOR 2SC4081

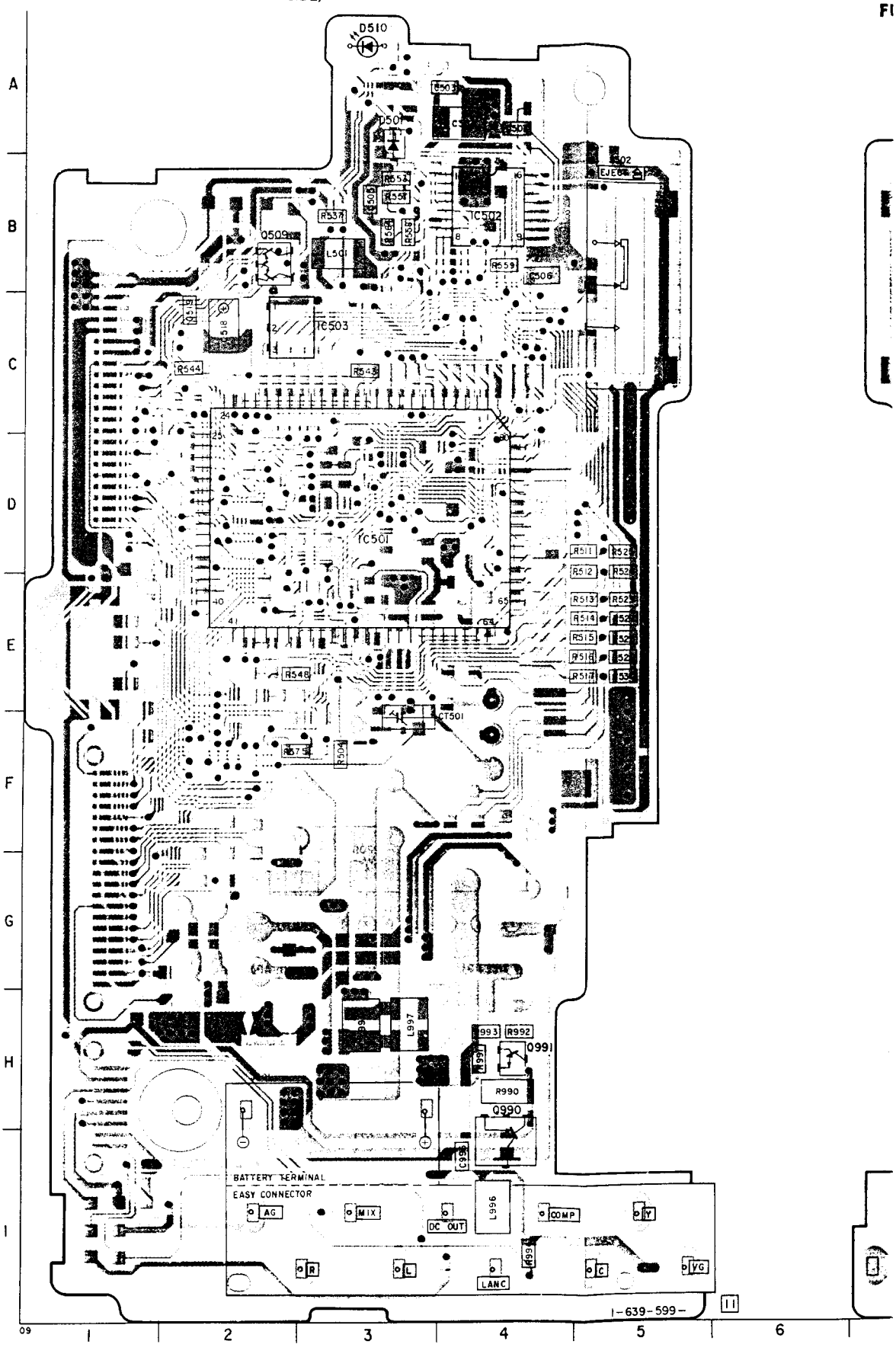

TED WIRING BOARD of it is omitted.

FU-104 BOARD (CONDUCTOR SIDE)

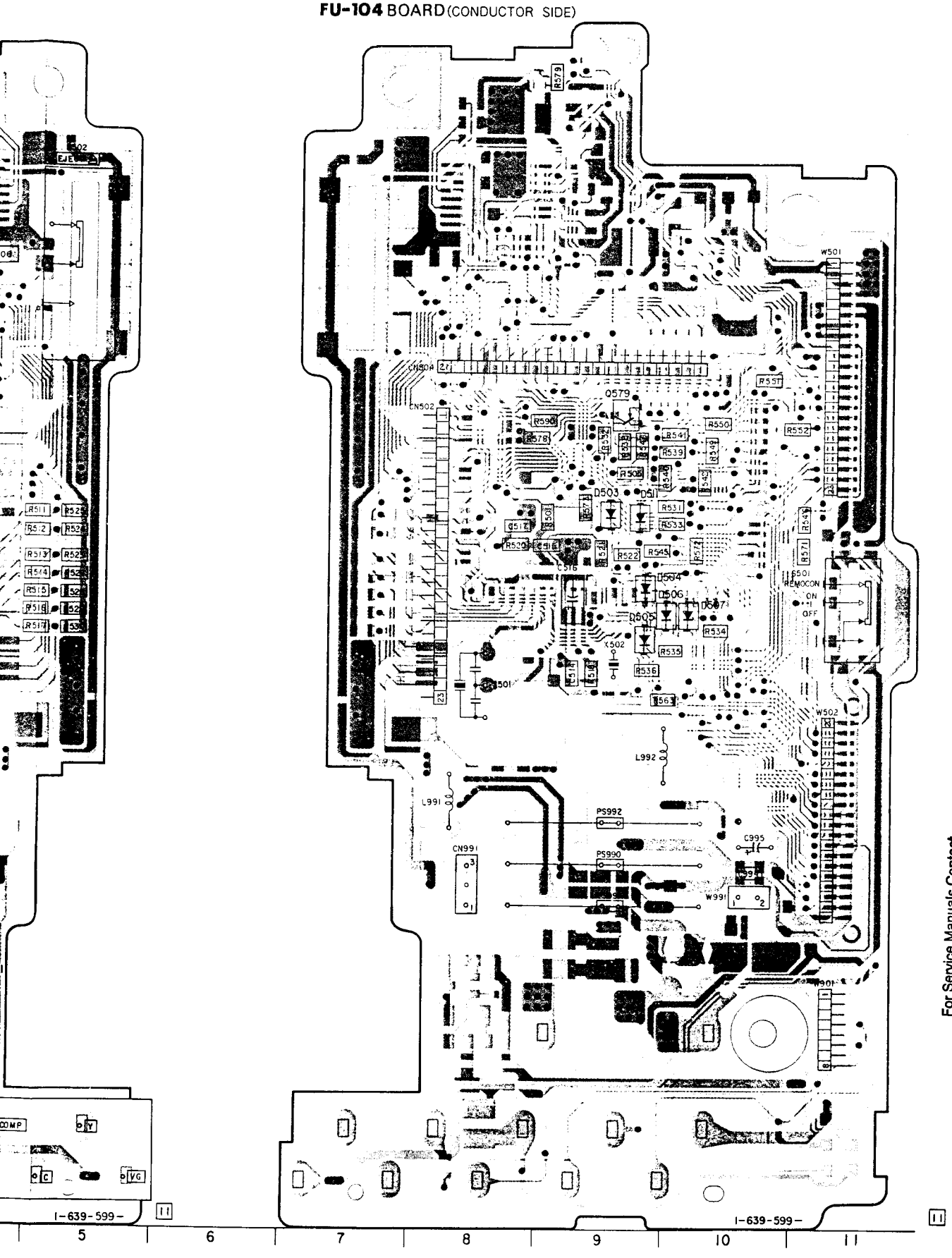

For Service Manuals Contact
MAURITRON TECHNICAL SERVICES
8 Cherry Tree Rd, Chinnor
Oxon OX9 4QY
Tel:- 01844-351694 Fax:- 01844-352554
Email:- enquiries@mauritron.co.uk

— P.C.B. NO. FU-104 BLOCK: 10000 series —

For Service Manuals Contact
MAURITRON TECHNICAL SERVICES
8 Cherry Tree Rd, Chinnor
Oxon OX9 4QY
Tel:- 01844-351694 Fax:- 01844-352554
Email:- enquiries@mauritron.co.uk

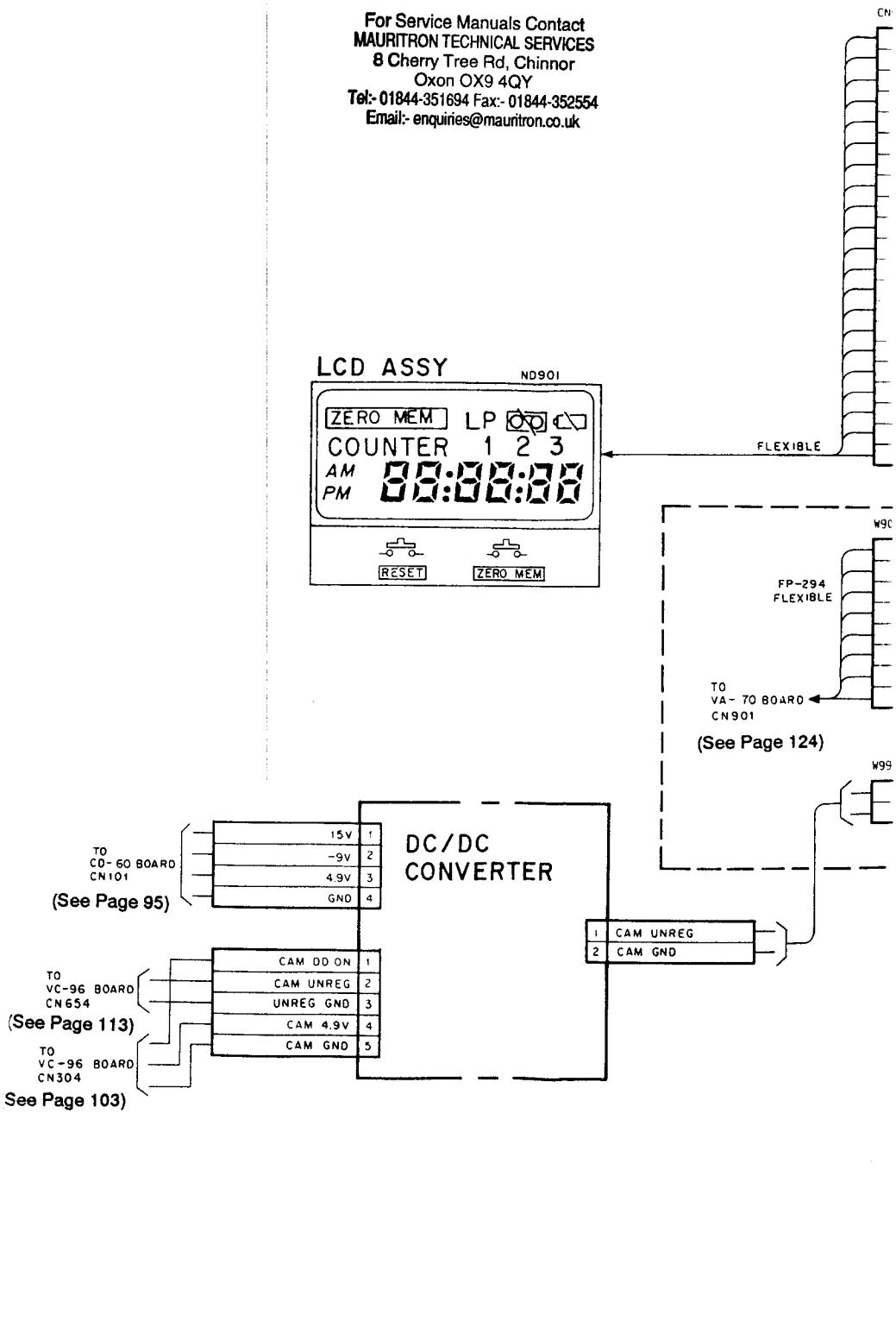

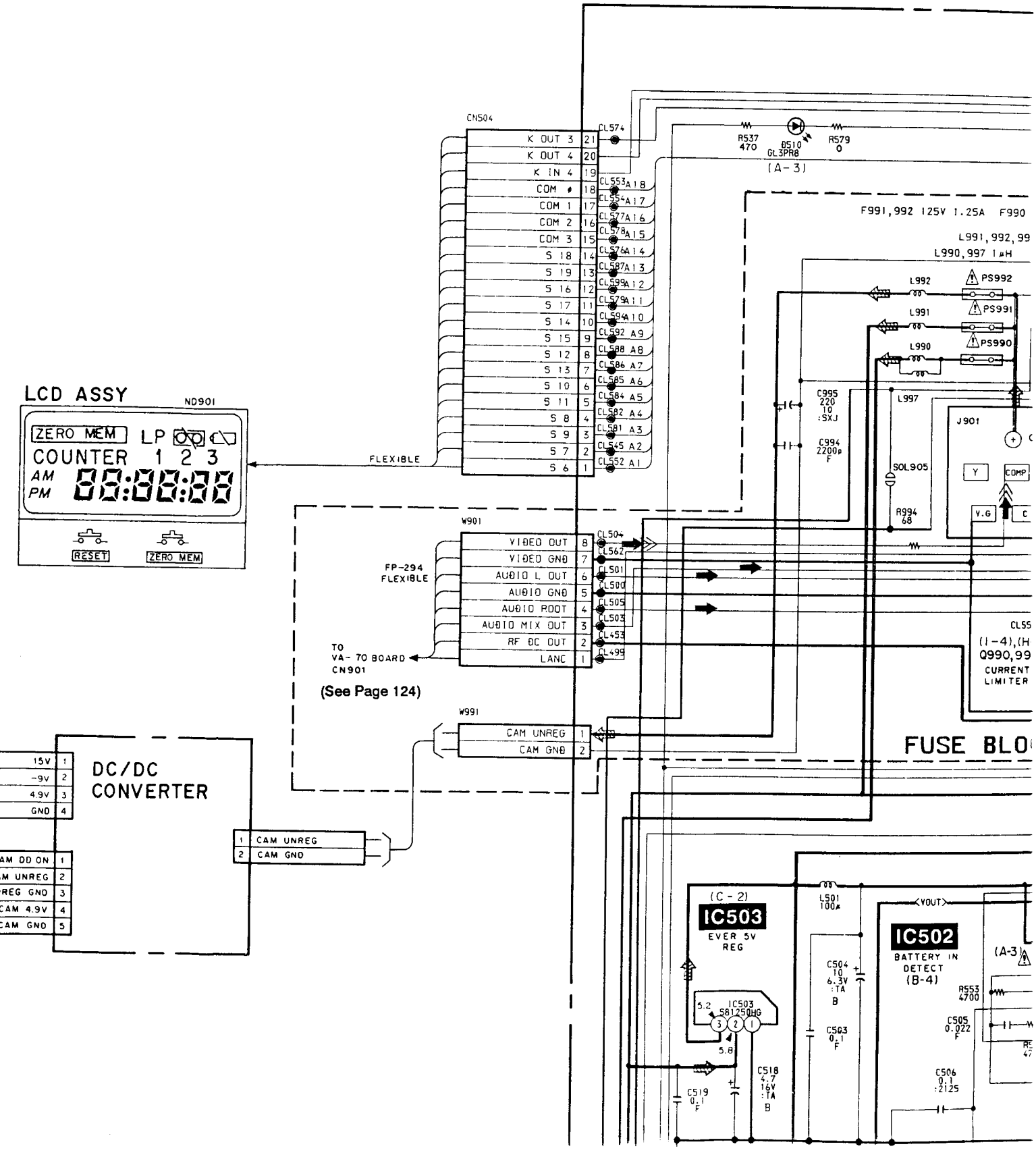
CN504
K OUT 3 21
K OUT 4 20
K IN 4 19
COM 0 18
COM 1 17
COM 2 16
COM 3 15
S 18 14
S 19 13
S 16 12
S 17 11
S 14 10
S 15 9
S 12 8
S 13 7
S 10 6
S 11 5
S 8 4
S 9 3
S 7 2
S 6 1
CL574
CL553 A18
CL554 A17
CL577 A16
CL578 A15
CL576 A14
CL587 A13
CL599 A12
CL579 A11
CL594 A10
CL592 A9
CL588 A8
CL586 A7
CL585 A6
CL584 A5
CL582 A4
CL581 A3
CL545 A2
CL552 A1
FLEXIBLE
LCD ASSY
ND901
ZERO MEM
LP
COUNTER 1 2 3
AM
PM
88:88:88
RESET
ZERO MEM
W901
VIDEO OUT 8
VIDEO GND 7
AUDIO L OUT 6
AUDIO GND 5
AUDIO ROOT 4
AUDIO MIX OUT 3
RF DC OUT 2
LANC 1
FP-294 FLEXIBLE
TO VA-70 BOARD CN901
(See Page 124)
CL504
CL562
CL501
CL500
CL505
CL503
CL453
CL499
W991
CAM UNREG 1
CAM GND 2
DC/DC CONVERTER
15V 1
-9V 2
4.9V 3
GND 4
AM DD ON 1
M UNREG 2
REG GND 3
CAM 4.9V 4
CAM GND 5
1 CAM UNREG
2 CAM GND
R537 470
D510 GL3PR8
R579 0
(A-3)
F991,992 125V 1.25A F990
L991,992,99
L990,997 1μH
L992
L991
L990
PS992
PS991
PS990
C995 220 10 :SXJ
C994 2200p F
L997
J901
SOL905
R994 68
Y
COMP
Y.G
CL55
(1-4),(H
Q990,99
CURRENT LIMITER
FUSE BLO
(C-2)
IC503
EVER 5V REG
5.2
IC503 S81250HG
5.8
C519 0.1 F
C518 4.7 16V :TA B
L501 100μ
C504 10 6.3V :TA B
C503 0.1 F
VOUT
IC502
BATTERY IN DETECT
(B-4)
(A-3)
R553 4700
C505 0.022 F
C506 0.1 :2125

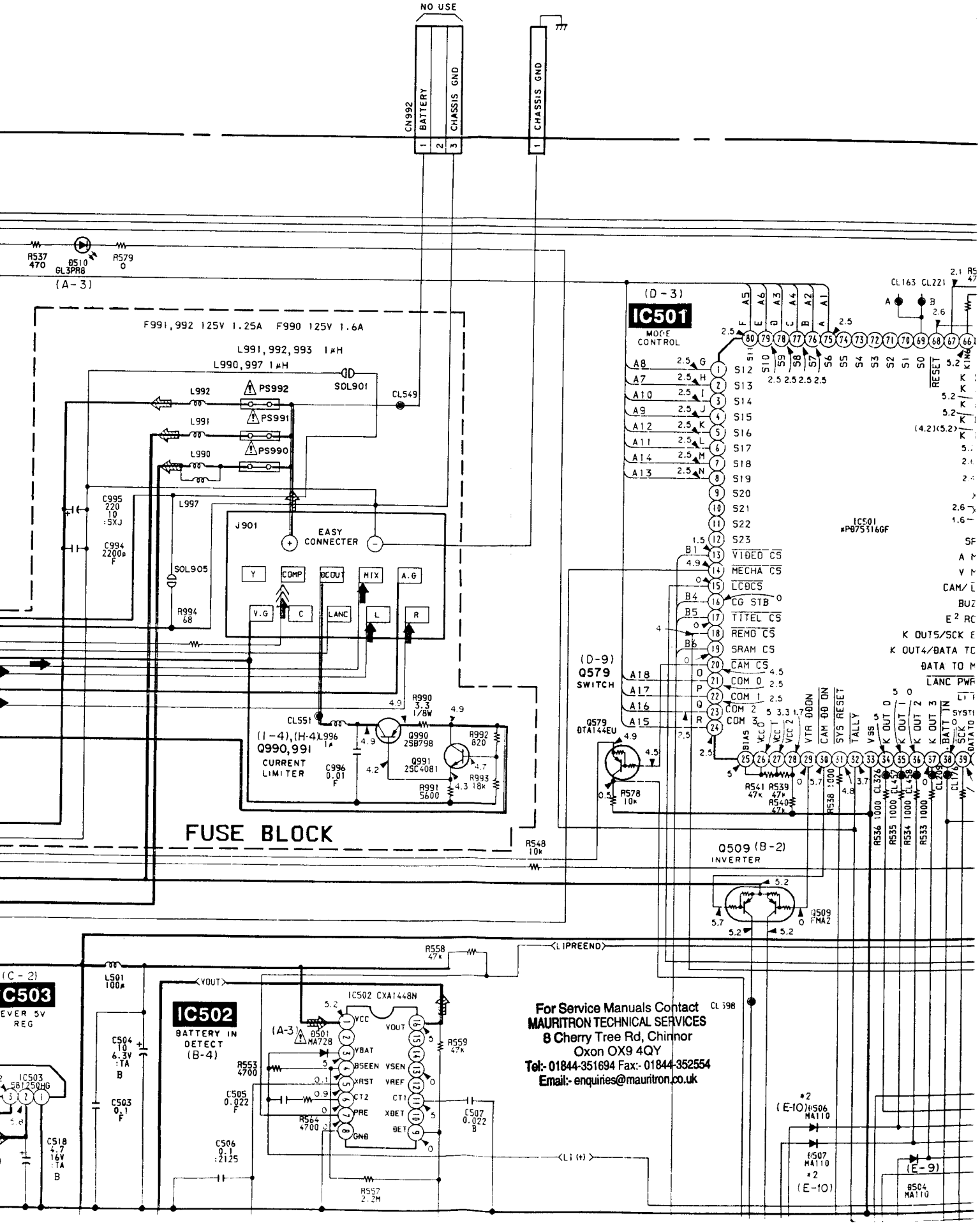

For Service Manuals Contact
MAURITRON TECHNICAL SERVICES
8 Cherry Tree Rd, Chinnor
Oxon OX9 4QY
Tel:- 01844-351694 Fax:- 01844-352554
Email:- enquiries@mauritron.co.uk

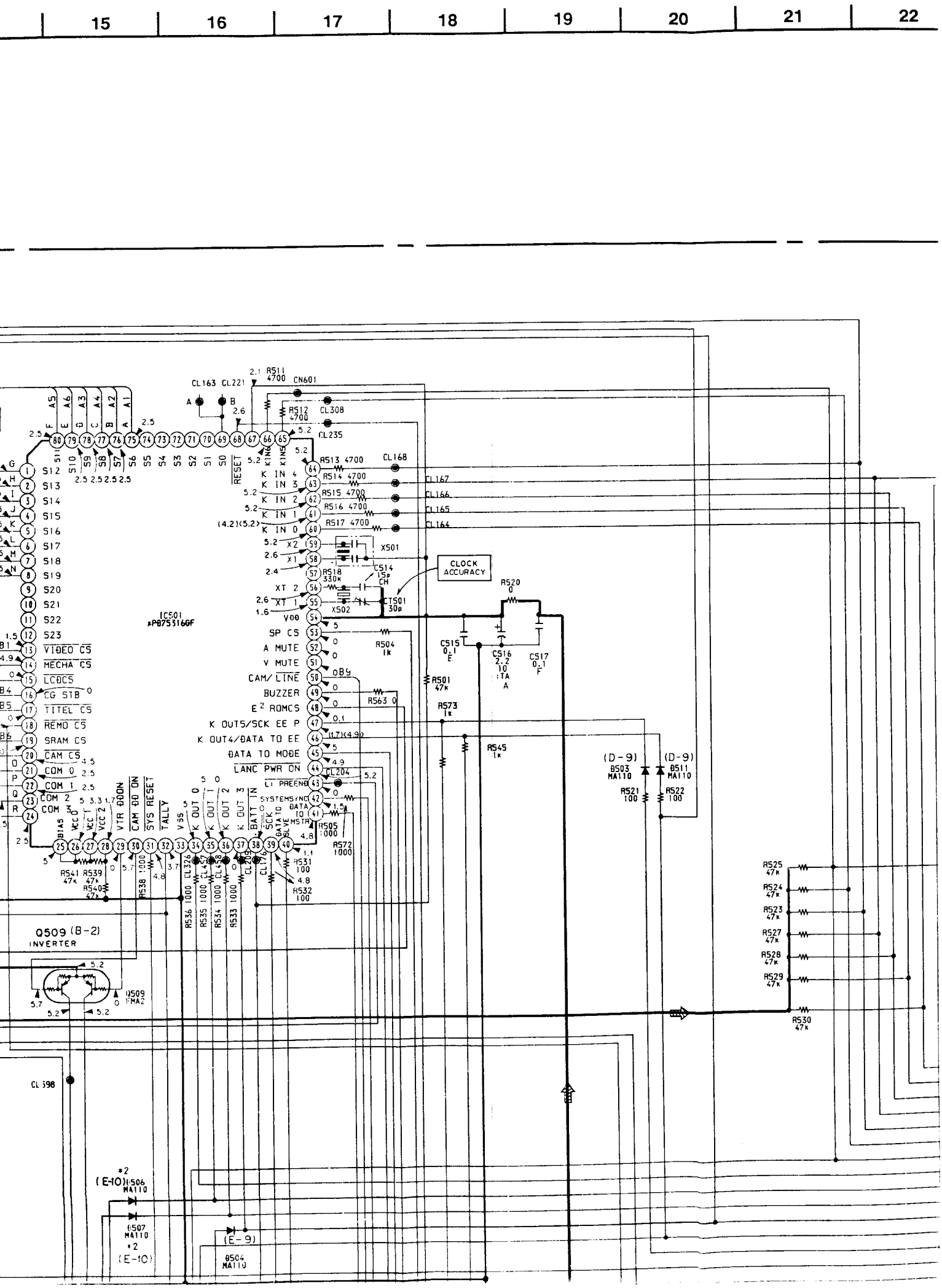
15
16
17
18
19
20
21
22
CL163 CL221
R511 4700
CN601
R512 4700
CL308
CL235
R513 4700
CL168
R514 4700
CL167
R515 4700
CL166
R516 4700
CL165
R517 4700
CL164
X501
CLOCK ACCURACY
R518 330k
C514 15p CH
CT501 30p
X502
R520 0
IC501 μPB75316GF
SP CS
A MUTE
V MUTE
CAM/ LINE
BUZZER
E² ROMCS
K OUT5/SCK EE P
K OUT4/DATA TO EE
DATA TO MODE
LANC PWR ON
LI PREEND
SYSTEMSYNC
DATA TO MSTR
R504 1k
R563 0
R501 47k
R573 1k
R545 1k
C515 0.1 E
C516 2.2 10 TA A
C517 0.1 F
(D-9) D503 MA110
(D-9) D511 MA110
R521 100
R522 100
R505 1000
R572 1000
R531 100
R532 100
R541 47k
R539 47k
R540 47k
R538 1000
R536 1000
R535 1000
R534 1000
R533 1000
Q509 (B-2) INVERTER
Q509 FMA2
R525 47k
R524 47k
R523 47k
R527 47k
R528 47k
R529 47k
R530 47k
CL598
*2 (E-10) D506 MA110
D507 MA110 *2 (E-10)
(E-9) D504 MA110

20 | 21 | 22 | 23 | 24 | 25 | 26 | 27

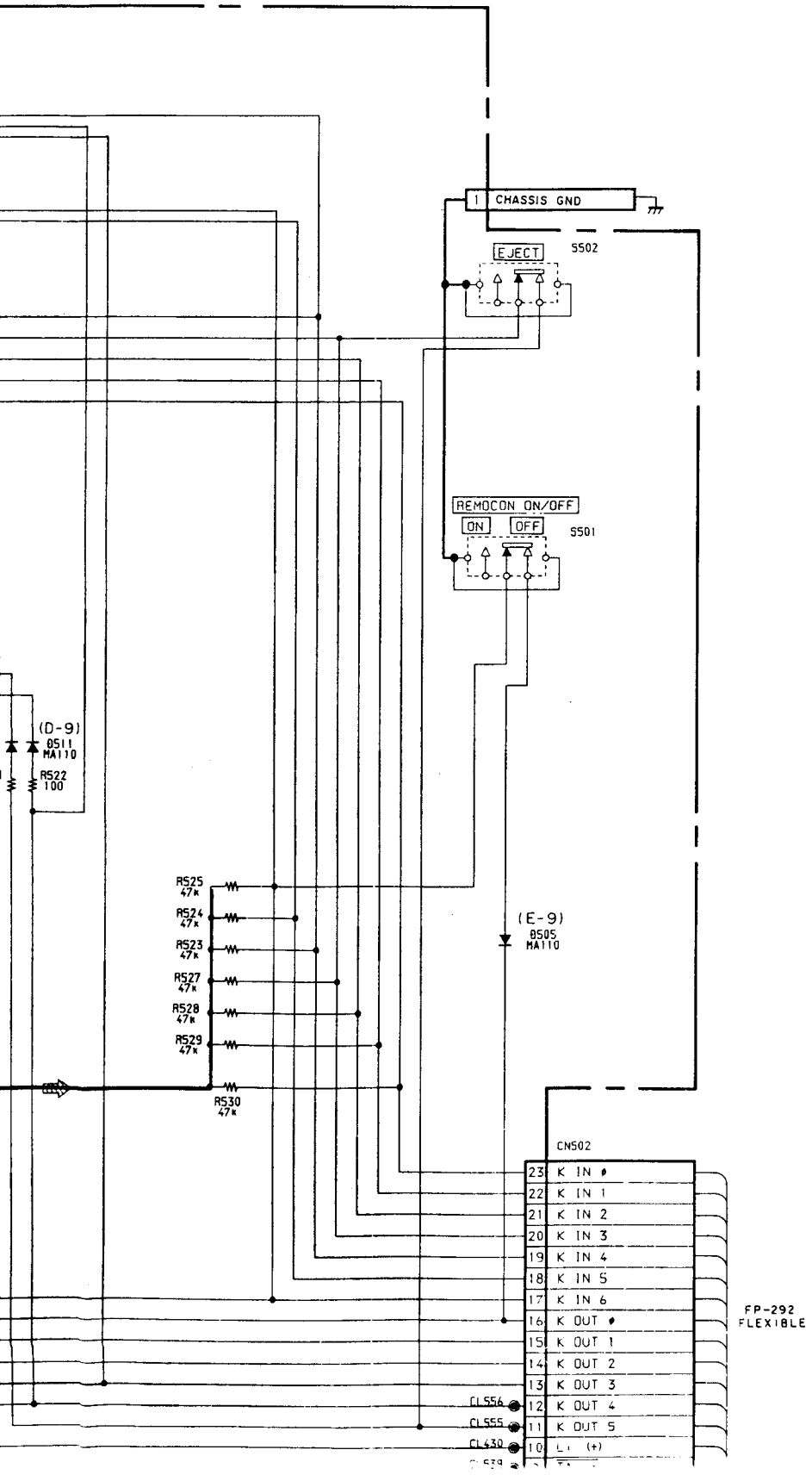

For Service Manuals Contact
MAURITRON TECHNICAL SERVICES
8 Cherry Tree Rd, Chinnor
Oxon OX9 4QY
Tel:- 01844-351694 Fax:- 01844-352554
Email:- enquiries@mauritron.co.uk

E

F

G

H

I

J

K

L

M

N

O

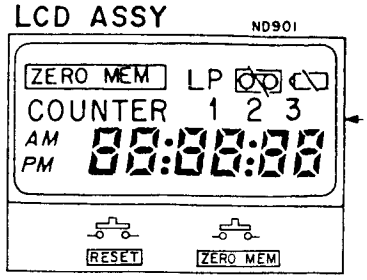

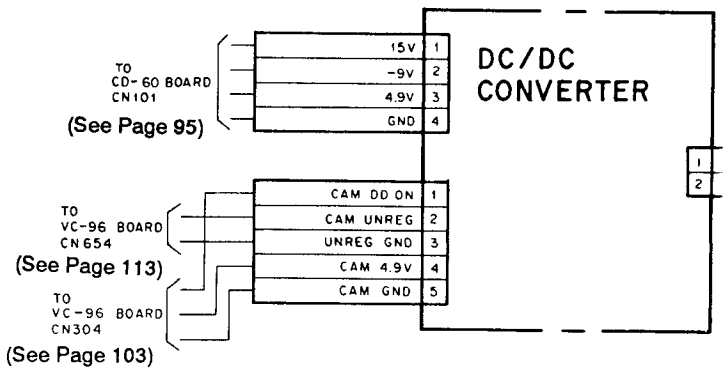

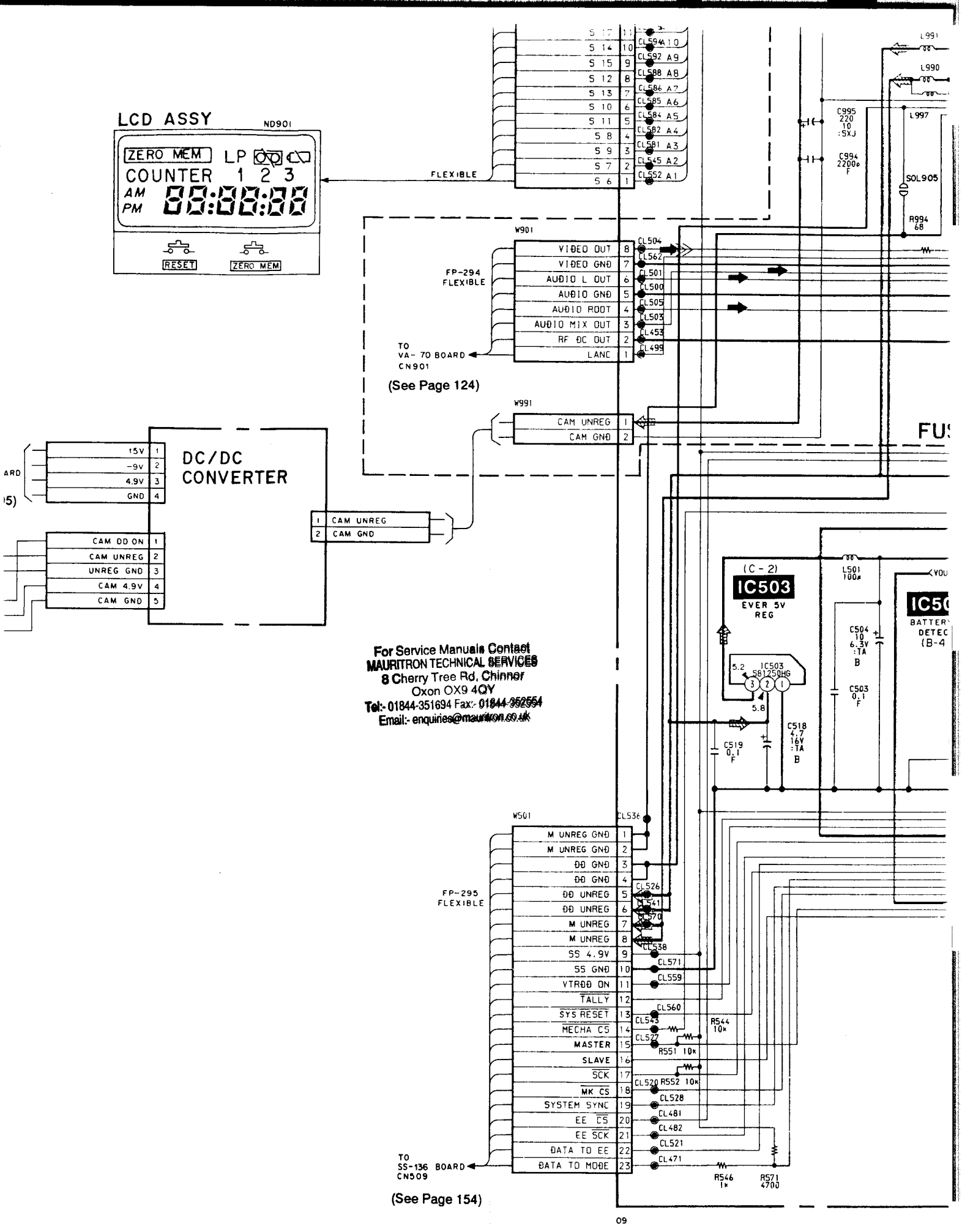

For Service Manuals Contact
MAURITRON TECHNICAL SERVICES
8 Cherry Tree Rd, Chinnor
Oxon OX9 4QY
Tel:- 01844-351694 Fax:- 01844-352554
Email:- enquiries@mauritron.co.uk

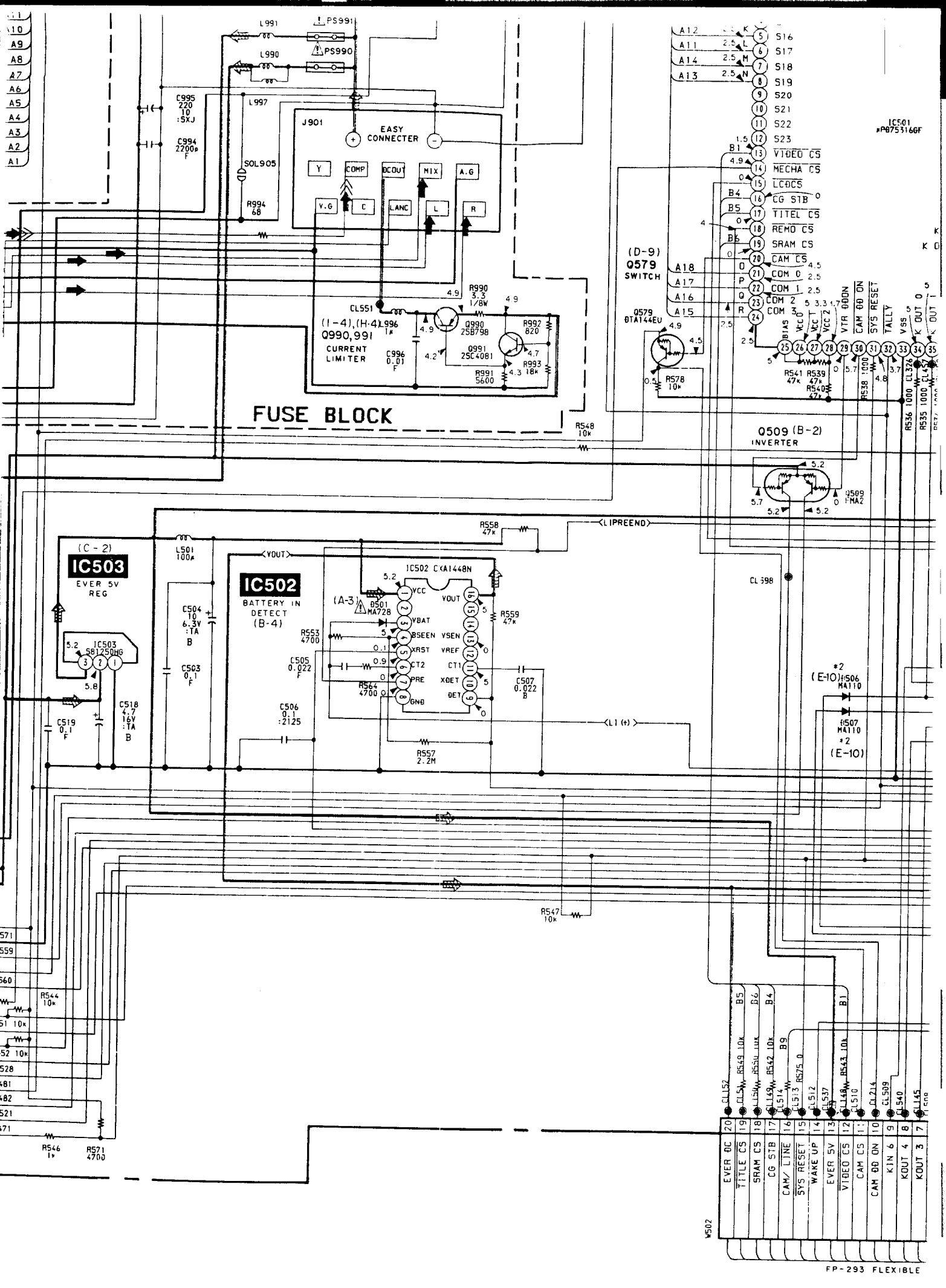
FUSE BLOCK
EASY CONNECTER
J901
SOL905
L991
PS991
L990
PS990
L997
C995 220 10 :5XJ
C994 2200p F
R994 68
Y
COMP
DCOUT
MIX
A.G
V.G
C
LANC
L
R
CL551
(I-4),(H-4)
Q990,991
CURRENT LIMITER
L996 1μ
C996 0.01 F
R990 3.3 1/8W
Q990 2SB798
Q991 2SC4081
R992 820
R993 18k
R991 5600
R548 10k
(D-9)
Q579
SWITCH
Q579 DTA144EU
R578 10k
IC501 #PD75316GF
S16
S17
S18
S19
S20
S21
S22
S23
VIDEO CS
MECHA CS
LCDCS
CG STB
TITEL CS
REMO CS
SRAM CS
CAM CS
COM 0
COM 1
COM 2
COM 3
BIAS
VCC0
VCC1
VCC2
VTR 00ON
CAM 00 ON
SYS RESET
TALLY
VSS
K OUT 0
K OUT 1
R541 47k
R539 47k
R540 47k
R538 1000
R536 1000
R535 1000
CL326
CL147
Q509 (B-2)
INVERTER
Q509 MA2
CL398
(C-2)
IC503
EVER 5V REG
IC503 S81250HG
L501 100μ
C504 10 6.3V :TA B
C503 0.1 F
C519 0.1 F
C518 4.7 16V :TA B
IC502
BATTERY IN DETECT
(B-4)
IC502 CXA1448N
VCC
VBAT
BSEEN
XRST
CT2
PRE
GND
VOUT
VSEN
VREF
CT1
XDET
DET
(A-3)
D501 MA728
R553 4700
C505 0.022 F
R564 4700
C506 0.1 :2125
R557 2.2M
C507 0.022 B
R558 47k
R559 47k
<LIPREEND>
<VOUT>
<L1 (+)>
*2 (E-10)
D506 MA110
D507 MA110
*2 (E-10)
R547 10k
R544 10k
R546 1k
R571 4700
W502
EVER DC
TITLE CS
SRAM CS
CG STB
CAM/ LINE
SYS RESET
WAKE UP
EVER 5V
VIDEO CS
CAM CS
CAM 00 ON
KIN 6
KOUT 4
KOUT 3
R549 10k
R550 10k
R542 10k
R575 0
R543 10k
CL152
CL154
CL149
CL513
CL512
CL537
CL148
CL510
CL214
CL509
CL540
CL145
FP-293 FLEXIBLE

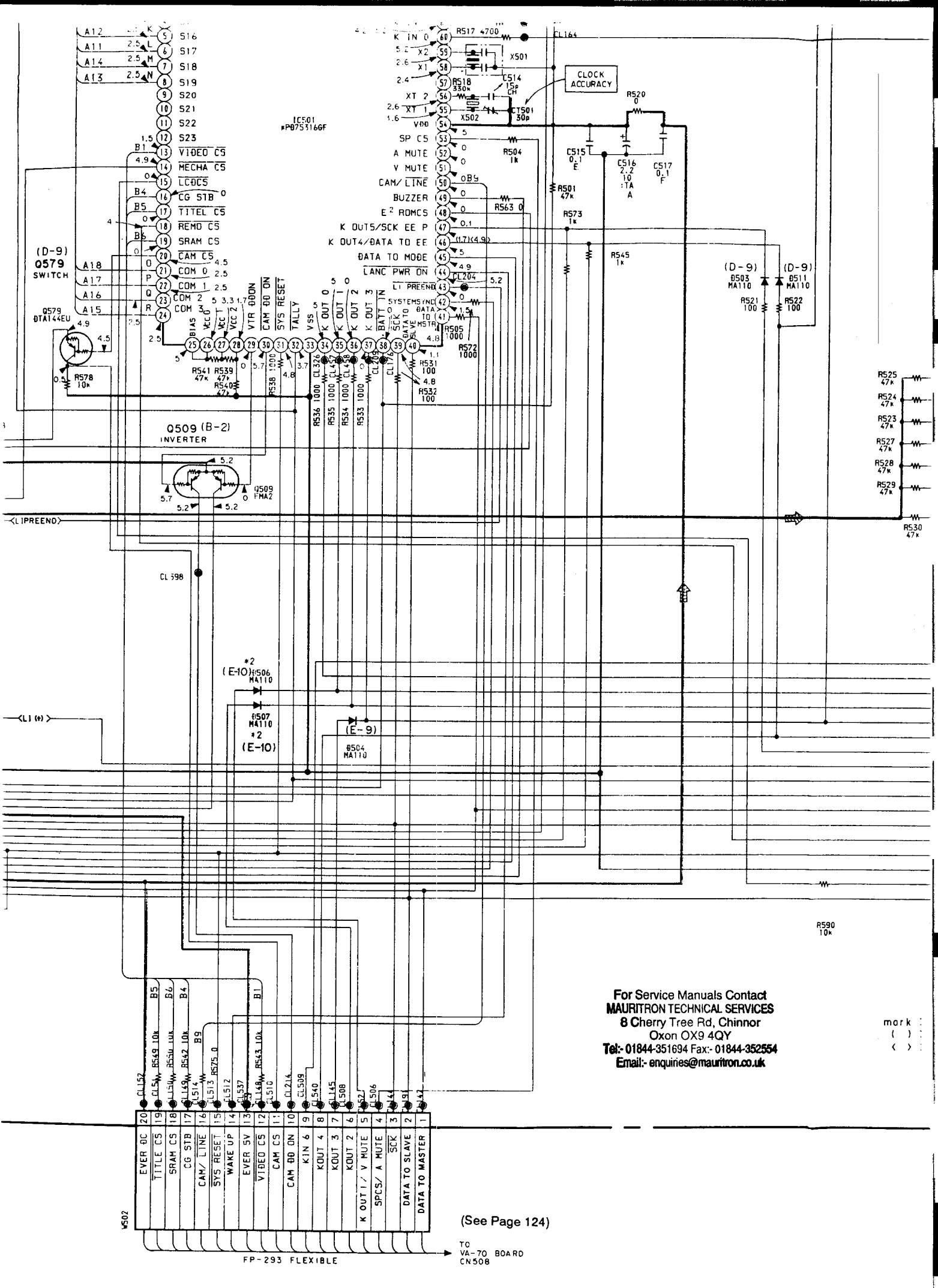

For Service Manuals Contact
MAURITRON TECHNICAL SERVICES
8 Cherry Tree Rd, Chinnor
Oxon OX9 4QY
Tel:- 01844-351694 Fax:- 01844-352554
Email:- enquiries@mauritron.co.uk

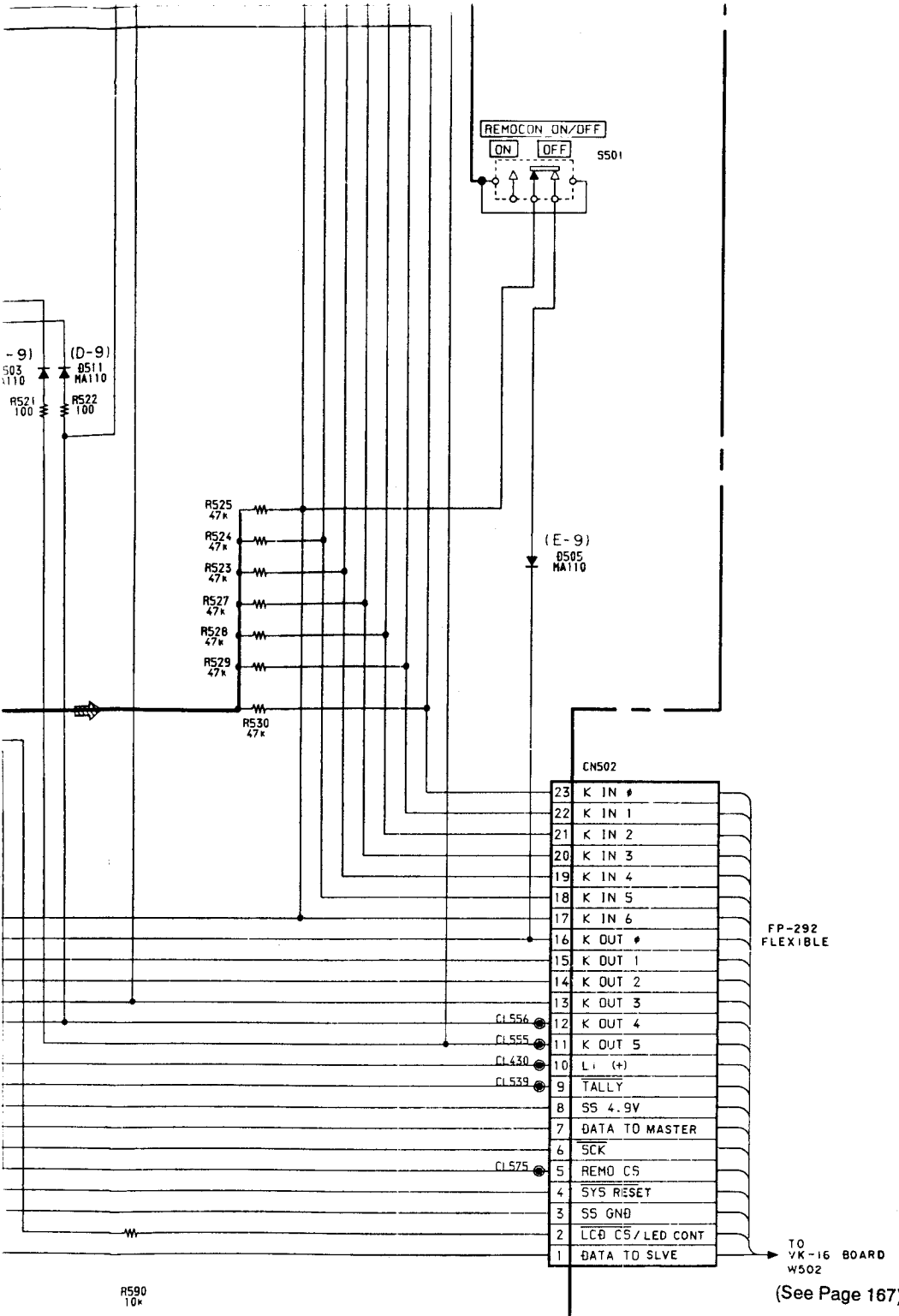

(See Page 167)

For Service Manuals Contact
MAURITRON TECHNICAL SERVICES
8 Cherry Tree Rd, Chinnor
Oxon OX9 4QY
Tel:- 01844-351694 Fax:- 01844-352554
Email:- enquiries@mauritron.co.uk

mark : VTR REC/PB mode
( ) : REC mode
〈 〉 : PB mode

FU-104 BOARD

• **SIGNAL PATH**

	VIDEO SIGNAL			AUDIO SIGNAL
	CHROMA	Y	Y/CHROMA/DATA	
REC				
PB			⇨⋙	⇨

8464A-15LLPF

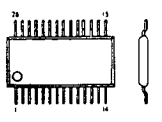

CF79028PG

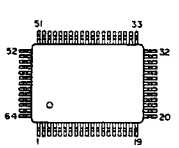

CXA1127M

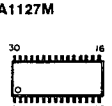

CXA1204Q
M51285BGP

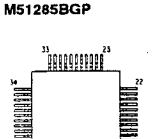

CXA1207R
MC68HC11E9FU

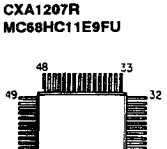

CXA1208R
CXA1392R
CXA1488R
MB673198U
MB8783PFV

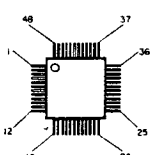

CXA1393AN

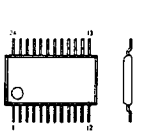

CXA1488R
CXL5502M
MC14094BPF

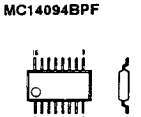

CXA1536Q

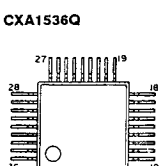

CXD1159Q

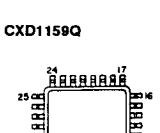

CXP80116
S-81250HG

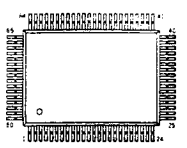

LA7293M
LM393DR
M5201FP
MM1036XF
NJM2233AM
NJM2234M
NJM2235M
RC3414M

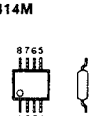

LM324DR
TL1596CDB
XRU4066BF

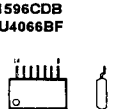

M62352GP
UPD6451AGT
UPD7564G

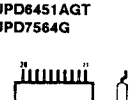

For Service Manuals Contact
MAURITRON TECHNICAL SERVICES
8 Cherry Tree Rd, Chinnor
Oxon OX9 4QY
Tel:- 01844-351694 Fax:- 01844-352554
Email:- enquiries@mauritron.co.uk

2SA1576S
2SB1218
2SB624
2SC2223
2SC4081R
2SD1819A
DTC115EU
DTC144EK
UN5213
UN5215

2SB1115A
2SB1121
2SB798

2SB1202FAT

2SK94
2SK1332

DTA144EU
DTC114EU
DTC114TU
DTC144EU
DTC144WU

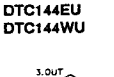

FC101

FMA2

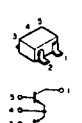

FMG2
FMG5

IMD2
IMZ1

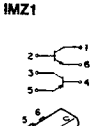

IMH8
XN6213
XN6215

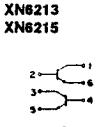

VN5213

XN4501

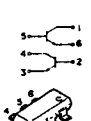

XN4601

ISS196
SB10-05CP

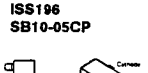

1SS226

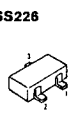

IT32

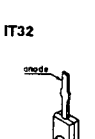

DAN202U

DTZ12
DTZ4.3
DTZ5.1
MA728

MA110

RD9.1M
SB05-05CP

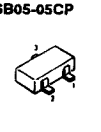

TLR124

SECTION 5
EXPLODED VIEWS

NOTE:
- -XX, -X mean standardized parts, so they may have some difference from the original one.
- Color Indication of Appearance Parts
  Example:
  KNOB, BALANCE (WHITE)...(RED)
  ↑ ↑
  Parts color Cabinet's color
- Items marked " * " are not stocked since they are seldom required for routine service. Some delay should be anticipated when ordering these items.
- The mechanical parts with no reference number in the exploded views are not supplied.
- Hardware (# mark) list is given in the last of this parts list.

The components identified by mark ⚠ or dotted line with mark ⚠ are critical for safety.
Replace only with part number specified.

5-1. CABINET (R) AND CABINET (U) ASSEMBLIES

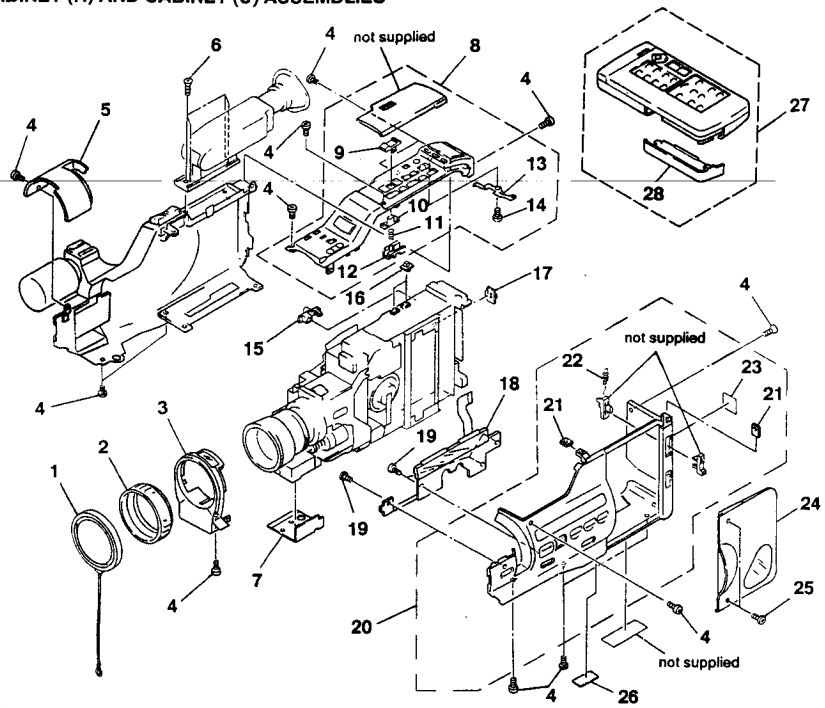

Ref. No.	Part No.	Description	Remark
1	A-7091-618-A	CAP BLOCK ASSY, HOOD	
2	3-728-269-01	HOOD	
3	X-3940-501-1	COVER ASSY, HEAD	
4	3-719-381-01	SCREW (M2X4)	
5	3-942-282-01	COVER, LENS	
6	3-719-831-21	SCREW (M2X4)	
7	3-943-337-01	COVER, AF	
8	X-3940-659-1	CABINET (UPPER) ASSY (AEP/UK)	
	X-3940-896-1	CABINET (UPPER) ASSY (E/Australian)	
9	3-744-723-01	BUTTON (10), POWER	
10	* 3-718-257-11	BUTTON, PUSH, POWER	
11	3-303-973-00	SPRING, COMPRESSION	
12	3-744-815-01	PLATE, BLIND, POWER	
13	3-942-242-01	SPRING, LEAF, CLICK	
14	3-713-790-01	SCREW (M2X5), TAPPING, P3	
15	3-744-897-01	KNOB, BILINGUAL	
16	3-942-255-01	BUTTON, EDIT	
17	3-744-875-03	KNOB, REMOTE	
18	* A-7071-426-A	CK-ZK BOARD, COMPLETE	
19	3-713-790-21	SCREW (M2X6), TAPPING, P3	
20	X-3940-660-1	CABINET (R) ASSY	
21	3-718-233-01	NUT, PLATE	
22	3-674-402-00	SPRING, TENSION	
23	* 3-719-683-01	LABEL, BATTERY FITTING	
24	X-3940-500-1	LID ASSY, CASSETTE	
25	3-733-912-11	SCREW (M2X4.5), SPECIAL HEAD	
26	* 3-704-235-01	LABEL, CAUTION (UK)	
27	1-465-395-41	COMMANDER, REMOTE (RMT-502) (E/Australian)	
	1-465-395-81	COMMANDER, REMOTE (RMT-502) (AEP/UK)	
28	3-724-854-01	CASE, BATTERY	

5-2. CABINET (L) ASSEMBLY

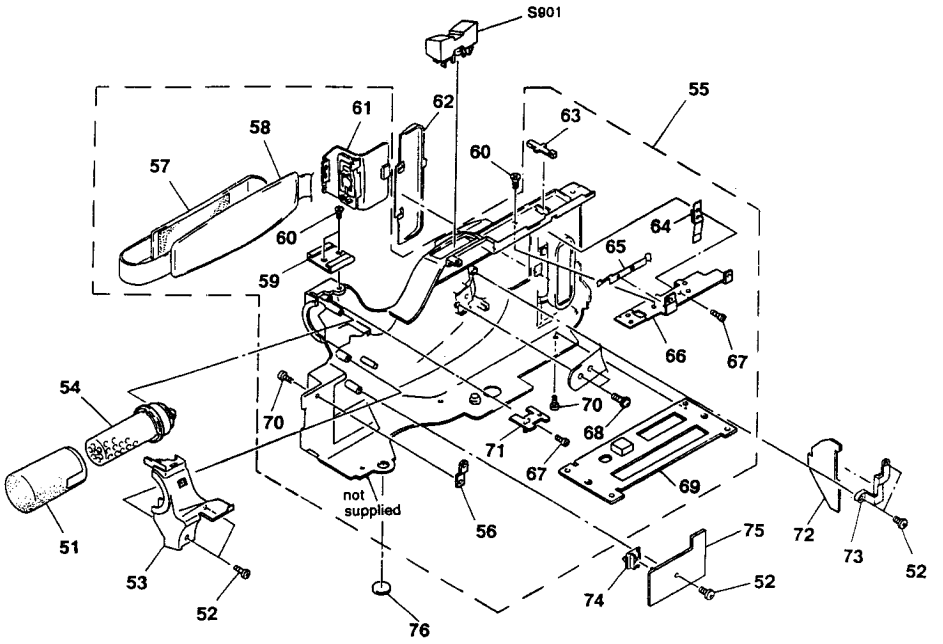

Ref. No.	Part No.	Description	Remark
51	X-2542-033-1	SCREEN ASSY, WINDOW	
52	3-713-790-21	SCREW (M2X6), TAPPING, P3	
53	3-942-280-01	HOUSING, MICROPHONE	
54	* 8-814-268-00	MICROPHONE C-2033 SET (STEREO)	
55	A-7081-566-B	CABINET (L) BLOCK ASSY (E/Australian)	
55	A-7081-639-A	CABINET (L) BLOCK ASSY (AEP/UK)	
56	3-942-241-02	BRACKET, LC	
57	3-739-866-81	BELT, GRIP	
58	3-724-591-01	PAD, GRIP	
59	3-724-511-01	SHOE, ACCESSORY	
60	3-719-831-21	SCREW (M2X4)	
61	X-3744-825-1	KNOB ASSY, SP	
62	3-744-874-41	LID, CONNECTOR	
63	3-744-709-01	LOCK, SLIDE	
64	3-942-238-01	SPRING, AV	
65	3-744-876-01	SPRING, EVF LOCK	
66	3-942-252-01	PLATE, VF	
67	3-713-790-11	SCREW (M2X5), TAPPING, P3	
68	3-669-480-21	+ PTPWH 2	
69	X-3940-497-1	SHEET METAL ASSY, TRIPOD	
70	3-719-381-01	SCREW (M2X4)	
71	3-942-240-01	BRACKET, SHOE	
72	* A-7071-428-A	SW-175P BOARD, COMPLETE	
73	3-744-808-01	RETAINER, SW	
74	3-942-244-01	KNOB, MC	
75	* A-7062-784-A	MC-82P BOARD, COMPLETE	
76	3-725-181-01	CAP, LOWER, AF	
S901	1-572-692-11	SWITCH, PUSH (ZOOM SWITCH UNIT)	

5-3. EVF ASSEMBLY

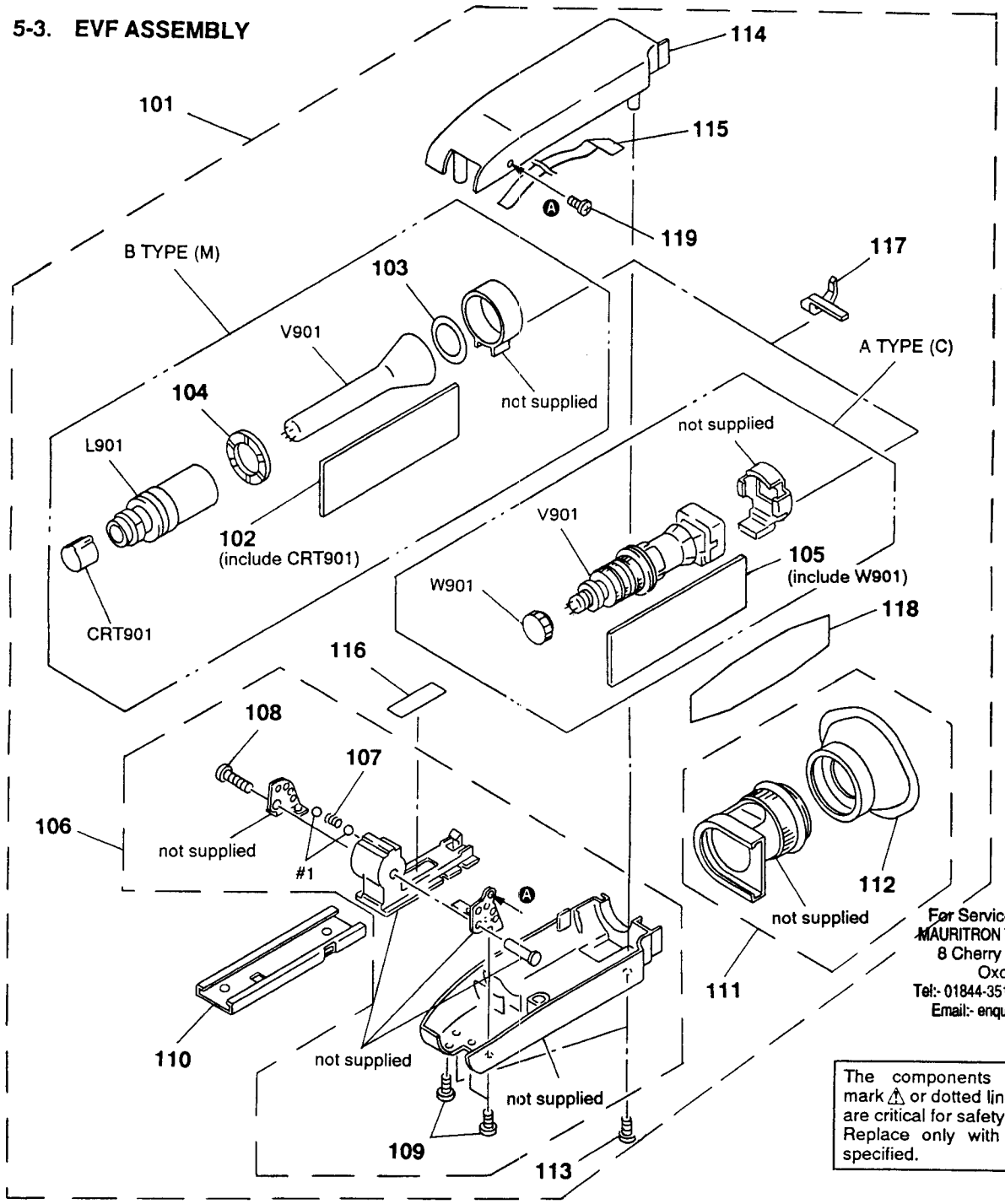

For Service Manuals Contact
MAURITRON TECHNICAL SERVICES
8 Cherry Tree Rd, Chinnor
Oxon OX9 4QY
Tel:- 01844-351694 Fax:- 01844-352554
Email:- enquiries@mauritron.co.uk

The components identified by mark ⚠ or dotted line with mark ⚠ are critical for safety.
Replace only with part number specified.

Ref. No.	Part No.	Description	Remark
101	A-7019-301-A	EVF (M) ASSY (B TYPE)	
	A-7019-302-A	EVF (C) ASSY (A TYPE)	
102	* A-7062-278-A	VF-26P BOARD, COMPLETE (B TYPE (M))	
103	3-724-570-01	RING, CRT FIXED (B TYPE (M))	
104	3-724-549-01	LOCK, CRT (B TYPE (M))	
105	* A-7062-278-A	VF-27P BOARD, COMPLETE (A TYPE (C))	
106	X-3744-701-1	CASE ASSY, LOWER, VF	
107	3-302-492-00	SPRING, COMPRESSION	
108	3-732-012-11	SCREW (M2X5)	
109	3-719-381-01	SCREW (M2X4)	
110	3-744-712-01	SHOE, VF	
111	X-3940-369-1	FINDER (S) ASSY, SPORTS	
112	3-749-142-01	EYE CUP	
113	3-713-790-31	SCREW (M2X8), TAPPING, P3	
114	3-744-705-01	CASE, VF (UPPER)	
115	1-634-011-11	FP-264 FLEXIBLE BOARD	
116	3-744-716-01	COVER, FL	
117	3-744-722-01	GUIDE, VF TALLY	
118	3-744-775-01	INSULATOR, VF	
119	3-744-720-11	SCREW (M2X3)	
CRT901	⚠ 1-526-978-21	SOCKET ASSY, CRT (ON VF-26P BOARD) (B TYPE (M))	
L901	⚠ 1-451-310-21	DEFLECTION YOKE (B/W) (ON VF-26P BOARD) (B TYPE (M))	
V901	⚠ 1-452-482-11	CRT ASSY (M91JYZ60WB) (ON VF-27P BOARD) (A TYPE (C))	
V901	⚠ 1-546-085-11	CATHODE-RAY TUBE, B/W (ON VF-26P BOARD) (B TYPE (M))	
W901	⚠ 1-540-019-21	SOCKET ASSY, CRT (ON VF-27P BOARD) (A TYPE (C))	

5-4. MECHANICAL DECK ASSEMBLY (1)

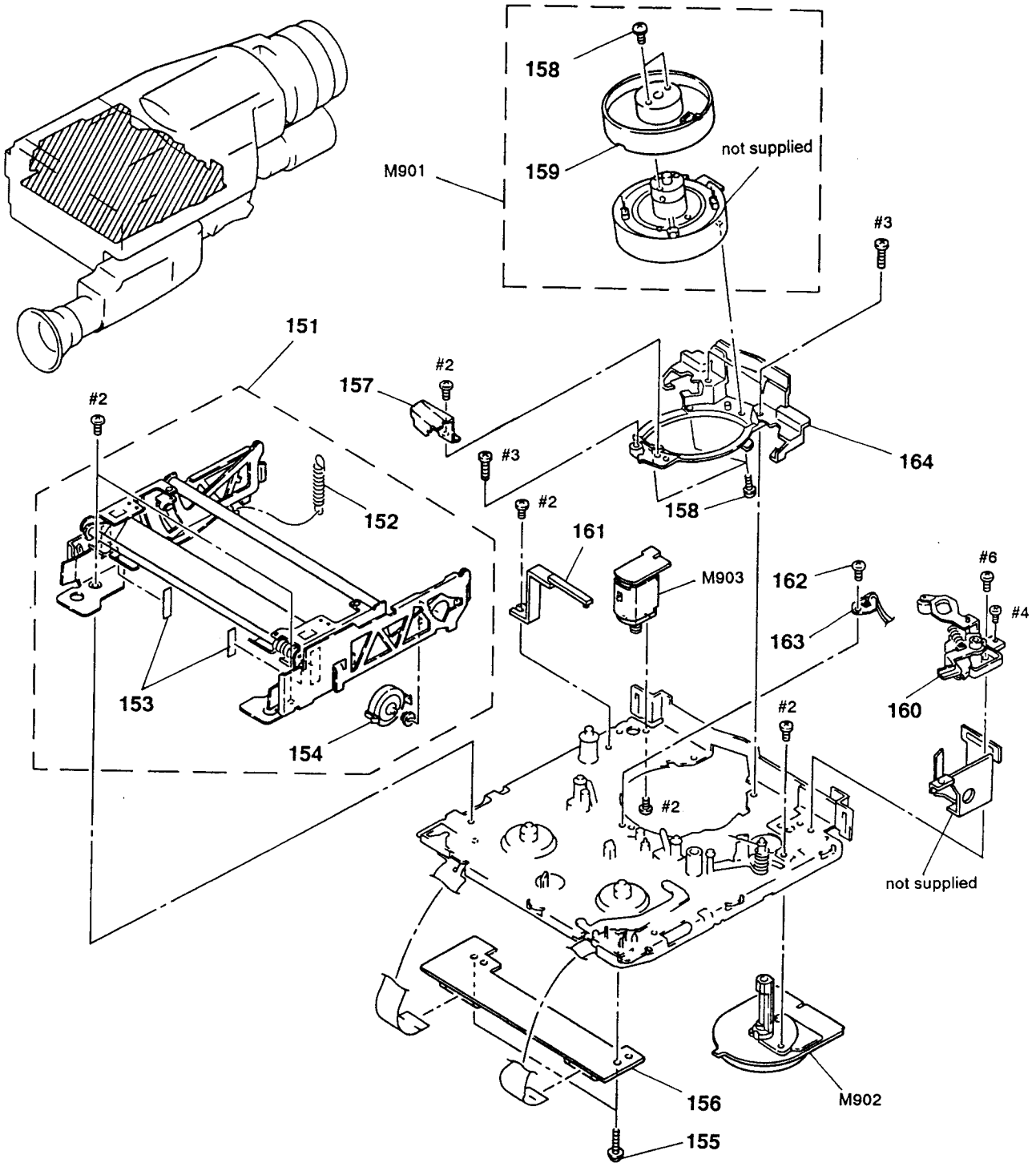

Ref. No.	Part No.	Description	Remark
151	X-3940-095-1	CASSETTE COMPARTMENT ASSY (N)	
152	3-728-825-03	SPRING, TENSION	
153	* 3-728-829-01	TAPE	
154	3-728-867-02	DAMPER, OIL	
155	3-719-601-01	SCREW (B2X5), TAPPING	
156	* A-7071-380-A	CC-61P BOARD, COMPLETE	
157	3-728-868-01	GUARD, GUIDE	
158	3-686-493-01	SCREW (M2X5), P1	
159	A-7049-342-A	DRUM ASSY, UPPER, ROTARY (DGR-63-R)	

Ref. No.	Part No.	Description	Remark
160	A-7040-205-A	ROLLER BLOCK ASSY (RP), HC	
161	X-3728-864-1	GROUND ASSY, SHAFT	
162	3-732-087-31	SCREW (M1.4X1.8), SPECIAL HEAD	
163	1-808-505-12	SENSOR (DEW SENSOR)	
164	X-3686-482-A	BASE ASSY, DRUM	
M901	A-7048-404-A	DRUM ASSY (DGU-63A-R)	
M902	8-835-331-01	MOTOR, DC U-22A (CAPSTAN)	
M903	A-7040-208-A	MOTOR ASSY, THREADING (LOADING)	

5-5. MECHANICAL DECK ASSEMBLY (2)

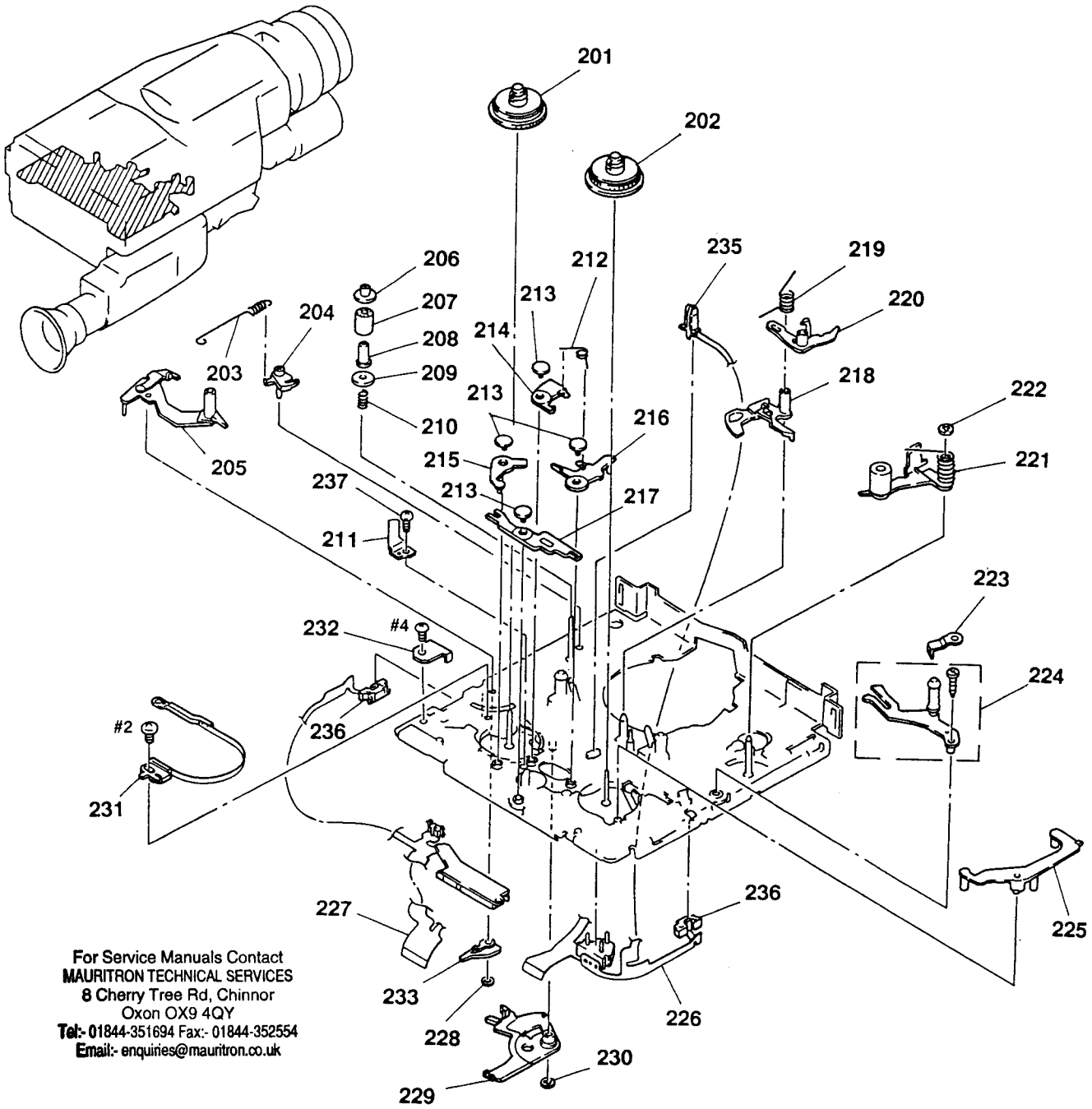

For Service Manuals Contact
MAURITRON TECHNICAL SERVICES
8 Cherry Tree Rd, Chinnor
Oxon OX9 4QY
Tel:- 01844-351694 Fax:- 01844-352554
Email:- enquiries@mauritron.co.uk

Ref. No.	Part No.	Description	Remark
201	X-3728-851-1	TABLE ASSY, REEL, S	
202	X-3728-855-1	TABLE ASSY, REEL, T	
203	3-736-414-01	SPRING, TENSION	
204	3-728-855-03	ARM, ADJUSTMENT	
205	X-3728-867-1	ARM ASSY (S), TENSION REGULATOR	
206	3-726-884-01	FLANGE, UPPER, TG2	
207	3-726-883-01	ROLLER, TG2	
208	3-726-885-01	SLEEVE, TG2	
209	3-726-882-02	FLANGE, LOWER, TG2	
210	3-726-886-01	SPRING, COMPRESSION	
211	3-726-848-01	RETAINER, TL	
212	3-726-866-01	SPRING (ST), TORSION	
213	3-726-858-01	PIN, SHAFT RETAINER	
214	3-728-849-01	BRAKE, S	
215	3-726-852-01	BRAKE, LB	
216	3-728-850-01	BRAKE, T	
217	3-726-853-01	LEVER, LB	
218	3-728-875-01	STOPPER, RK	
219	3-726-864-01	SPRING (RK), TORSION	

Ref. No.	Part No.	Description	Remark
220	3-728-852-02	ARM, RK STOPPER	
221	A-7040-219-A	ARM BLOCK ASSY, PINCH	
222	3-669-465-00	WASHER (1.5), STOPPER	
223	3-728-808-01	SPRING, LEAF	
224	X-3728-869-1	ARM ASSY, TG7	
225	3-728-848-01	ARM, LB RELEASE	
226	1-628-061-12	FP-90 FLEXIBLE BOARD	
227	1-628-060-12	FP-89 FLEXIBLE BOARD	
228	3-321-393-11	WASHER, STOPPER	
229	X-3728-863-1	LEVER ASSY, SW	
230	3-726-829-01	WASHER, STOPPER	
231	X-3728-859-1	BAND ASSY, TENSION REGULATOR	
232	3-730-125-01	RETAINER, SW	
233	X-3728-857-1	STOPPER ASSY, TENSION REGULATOR	
235	3-728-837-01	HOLDER, LED	
236	3-728-869-02	HOLDER, SENSOR	
237	3-732-087-31	SCREW (M1.4X1.8), SPECIAL HEAD	

5-6. MECHANICAL DECK ASSEMBLY (3)

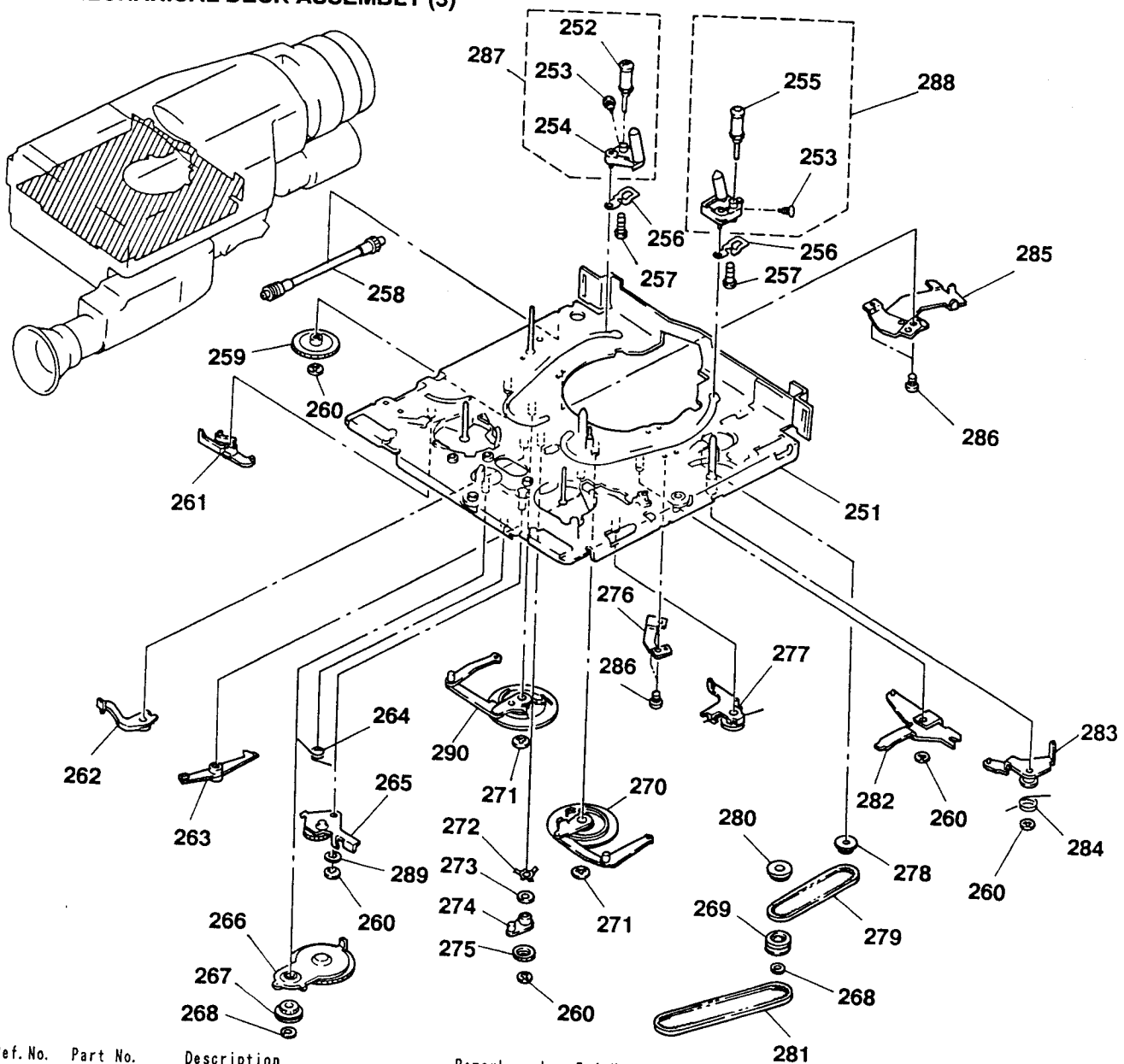

Ref. No.	Part No.	Description	Remark
251	X-3728-862-1	CHASSIS ASSY, MECHANICAL	
252	X-3726-820-1	ROLLER ASSY (U), GUIDE	
253	3-726-822-01	SCREW (M1.4X2) (STEP), HEAD	
254	X-3726-818-1	COASTER (LEFT) ASSY	
255	X-3728-808-4	ROLLER ASSY (U) (PLATING), GUIDE	
256	3-736-485-01	SPRING, LEAF, COSTER	
257	3-726-830-01	SCREW (M1.4X4) (THREE LOCK)	
258	X-3728-868-1	WORM ASSY	
259	3-744-109-01	GEAR, WHEEL	
260	3-726-829-01	WASHER, STOPPER	
261	3-728-842-01	LEVER, EJECT	
262	3-728-851-01	BRAKE, UL	
263	3-726-854-01	ARM, BRAKE RELEASE	
264	3-726-865-01	SPRING (LB), TORSION	
265	A-7040-225-A	GEAR BLOCK ASSY (N), LB	
266	X-3728-866-1	GEAR ASSY, RK	
267	X-3728-858-1	GEAR ASSY, RC	
268	3-321-393-11	WASHER, STOPPER	
269	3-741-196-01	PULLEY (LOWER), BELT MIDWAY	
270	X-3728-843-1	GEAR (RIGHT) ASSY, DRIVE	
271	3-669-465-00	WASHER (1.5), STOPPER	
272	3-726-867-01	SPRING, LEAF	
273	3-701-436-21	WASHER, POLYEHTHYLENE	
274	3-726-857-03	ARM, UL	
275	3-726-856-04	GEAR, UL	
276	* 3-726-805-01	REINFORCEMENT (TT)	
277	X-3726-808-2	BRAKE ASSY, TS	
278	X-3726-805-1	GEAR ASSY, JOINT	
279	3-728-866-11	BELT (S), TIMING	
280	X-3726-813-1	PULLEY (UPPER) ASSY, MIDWAY	
281	3-741-197-01	BELT (L), TIMING	
282	X-3728-846-1	LEVER ASSY, LOADING	
283	X-3726-824-1	ARM ASSY, PINCH SUB	
284	3-726-895-01	SPRING	
285	X-3726-841-1	REINFORCEMENT (SS) ASSY	
286	3-732-087-31	SCREW (M1.4X1.8), SPECIAL HEAD	
287	A-7040-128-A	COASTER (LEFT) BLOCK ASSY	
288	A-7040-217-A	COASTER (RIGHT) BLOCK ASSY (N1P)	
289	3-701-436-01	WASHER, 1.6	
290	X-3728-842-1	GEAR (LEFT) ASSY, DRIVE	

5-7. MAIN BOARDS ASSEMBLY

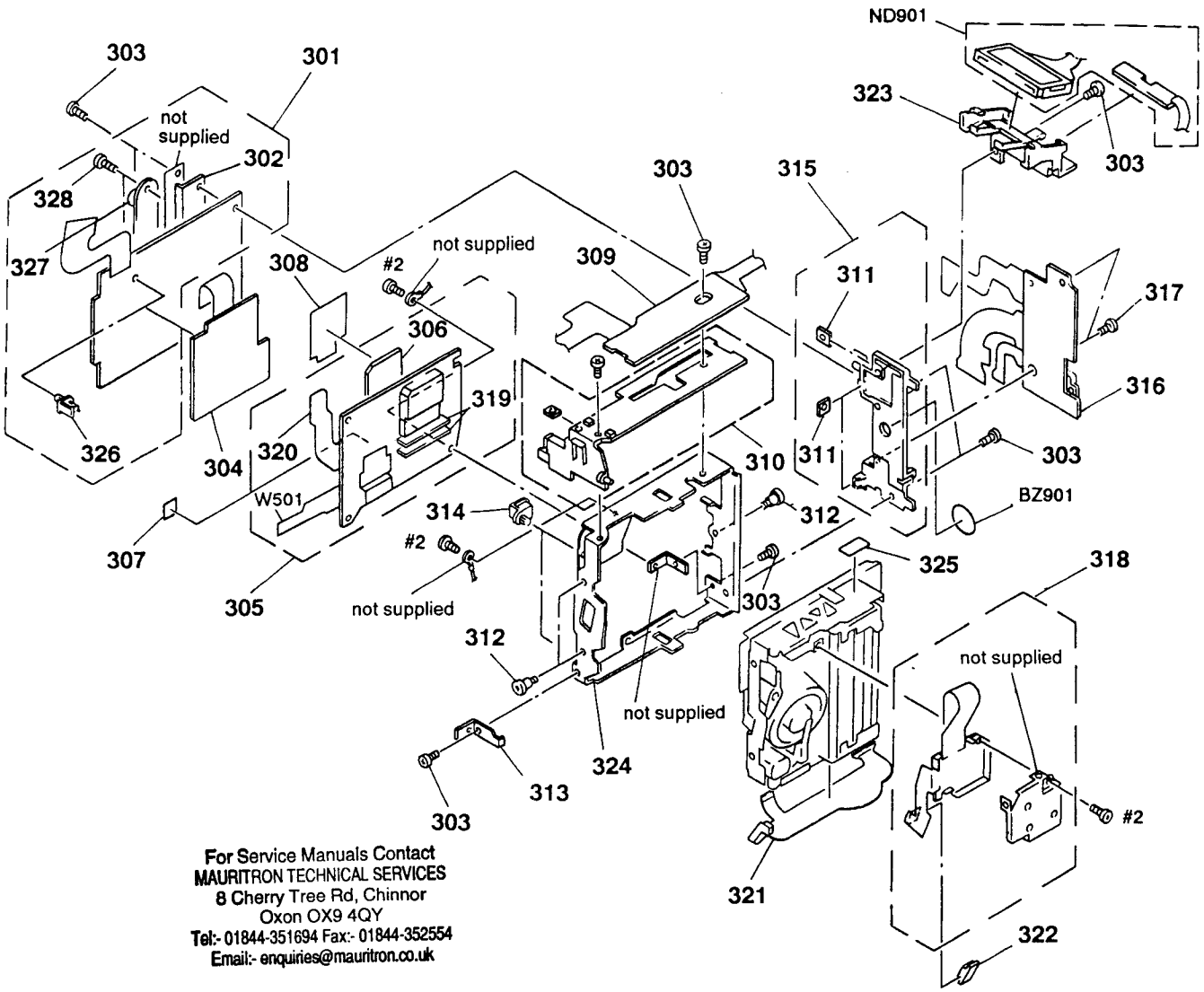

For Service Manuals Contact
MAURITRON TECHNICAL SERVICES
8 Cherry Tree Rd, Chinnor
Oxon OX9 4QY
Tel:- 01844-351694 Fax:- 01844-352554
Email:- enquiries@mauritron.co.uk

Ref. No.	Part No.	Description	Remark
301	* A-7062-780-A	VA-70P BOARD, COMPLETE (AEP/UK)	
	* A-7062-851-A	VA-70 (PB) BOARD, COMPLETE (E/Australian)	
302	X-3744-801-1	REINFORCEMENT ASSY, VA	
303	3-719-381-01	SCREW (M2X4)	
304	* A-7062-779-A	CT-40P BOARD, COMPLETE	
305	* A-7062-778-A	SS-136 (PB) BOARD, COMPLETE	
306	* X-3744-601-1	CASE ASSY (DD-B), SHIELD	
307	3-831-441-11	CLOTH, UNWEAVED (25X6X0.5)	
308	* 3-744-890-01	PLATE, PROTECTION, FLEXIBLE	
309	* A-7071-424-A	VK-16P BOARD, COMPLETE (AEP/UK)	
309	* A-7071-454-A	VK-16 (PB) BOARD, COMPLETE (E/Australian)	
310	X-3940-499-1	TABLE (UPPER) (V) ASSY	
311	3-718-233-01	NUT, PLATE	
312	3-744-603-21	SCREW	
313	3-942-235-01	HOOK, LOWER	
314	3-744-609-01	HINGE (C), PC BOARD	
315	X-3744-810-1	FRAME (R) ASSY, MD	

Ref. No.	Part No.	Description	Remark
316	* A-7062-781-A	FU-104P BOARD, COMPLETE	
317	3-713-790-21	SCREW (M2X6), TAPPING, P3	
318	8-741-509-11	IC S8X1509-11 (RP-77 HIC BOARD)	
319	1-633-942-11	FL-26 BOARD	
320	1-633-924-11	FP-248 FLEXIBLE BOARD	
321	1-633-922-11	FP-249 FLEXIBLE BOARD	
322	1-569-347-11	CONNECTOR, FPC (TRANSLATION) 13P	
323	* 3-744-905-01	HOLDER, LCD	
324	X-3744-602-1	FRAME ASSY, MD	
325	* 3-730-176-11	SHEET, MD	
326	3-744-842-01	SUPPORT, CT PC BOARD	
327	1-569-556-11	JACK	
328	3-719-695-01	SCREW (M1.7X3.5), SPECIAL HEAD	
BZ901	1-529-096-11	BUZZER, PIEZOELECTRIC	
ND901	1-809-023-11	DISPLAY PANEL, LIQUID CRYSTAL (LCD ASSY)	
W510	1-633-923-11	FP-252 FLEXIBLE BOARD	

5-8. CAMERA BLOCK ASSEMBLY

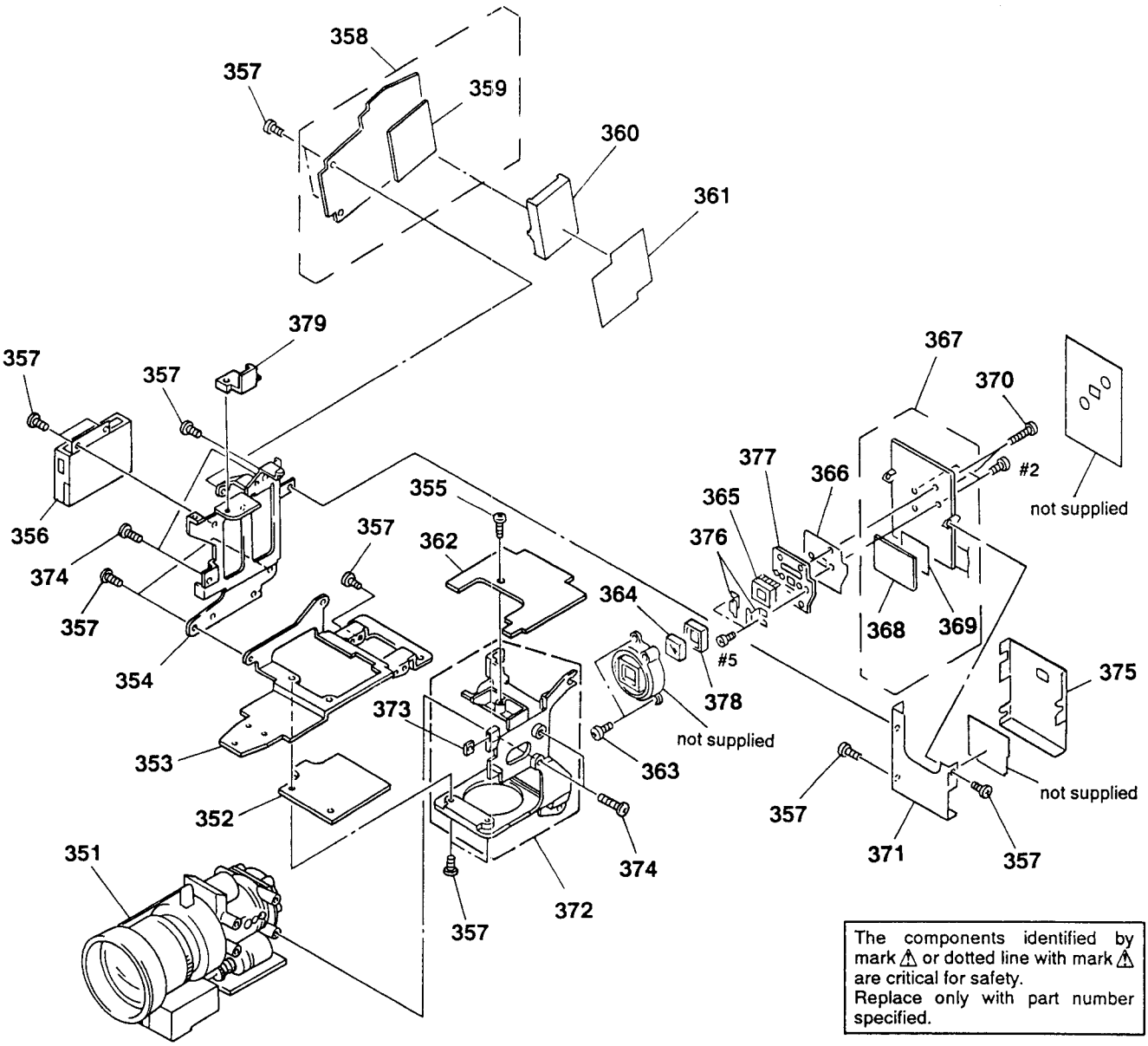

The components identified by mark ⚠ or dotted line with mark ⚠ are critical for safety.
Replace only with part number specified.

Ref. No.	Part No.	Description	Remark
351	1-547-481-11	LENS, ZOOM (VCL-8510XA)	
352	* A-7071-425-A	LI-36P BOARD, COMPLETE	
353	3-942-269-01	PLATE, BASE	
354	3-942-268-01	PLATE, ARM	
355	3-713-790-21	SCREW (M2X6), TAPPING, P3	
356	⚠ 1-466-230-21	CONVERTER UNIT, D/D (DC-DC CONVERTER UNIT)	
357	3-719-381-01	SCREW (M2X4)	
358	* A-7062-776-A	VC-96P BOARD, COMPLETE	
359	A-7068-186-A	MX-10AP HIC BOARD, COMPLETE	
360	* 3-744-763-01	CASE, SHIELD, VC	
361	* 3-744-892-01	INSULATOR, VC	
362	* A-7062-782-A	DK-12P BOARD, COMPLETE	
363	3-738-519-11	SCREW (M2X3), +B	
364	1-547-381-12	FILTER BLOCK, OPTICAL (ON CCD IMAGER)	
365	8-752-604-72	IC ICX039AN-2 (CCD IMAGER) (ON CD-60P BOARD)	

Ref. No.	Part No.	Description	Remark
366	* 3-725-180-01	SHEET, INSULATING, CCD HOLDER	
367	* A-7062-777-A	CD-60P BOARD, COMPLETE	
368	A-7068-173-C	DT-77F HIC BOARD, COMPLETE	
369	* X-3739-811-1	PLATE ASSY, SHIELD, CD	
370	3-335-640-51	SCREW (M2X16)	
371	* X-3744-702-1	CASE (MAIN) ASSY, SHIELD, C	
372	X-3940-498-1	HOLDER ASSY, CAMERA	
373	3-718-233-01	NUT, PLATE	
374	3-719-408-01	SCREW (B2), TAPPING, P3	
375	X-3744-763-1	LID, C SHIELD CASE	
376	* 3-725-175-01	STOPPER, CCD	
377	3-725-176-11	HOLDER, CCD	
378	* 3-725-177-01	RUBBER, SEAL	
379	3-942-555-01	CAMERA PLUS	

For Service Manuals Contact
MAURITRON TECHNICAL SERVICES
8 Cherry Tree Rd, Chinnor
Oxon OX9 4QY
Tel:- 01844-351694 Fax:- 01844-352554
Email:- enquiries@mauritron.co.uk

5-9. ZOOM LENS ASSEMBLY
(VCL-8510XA)

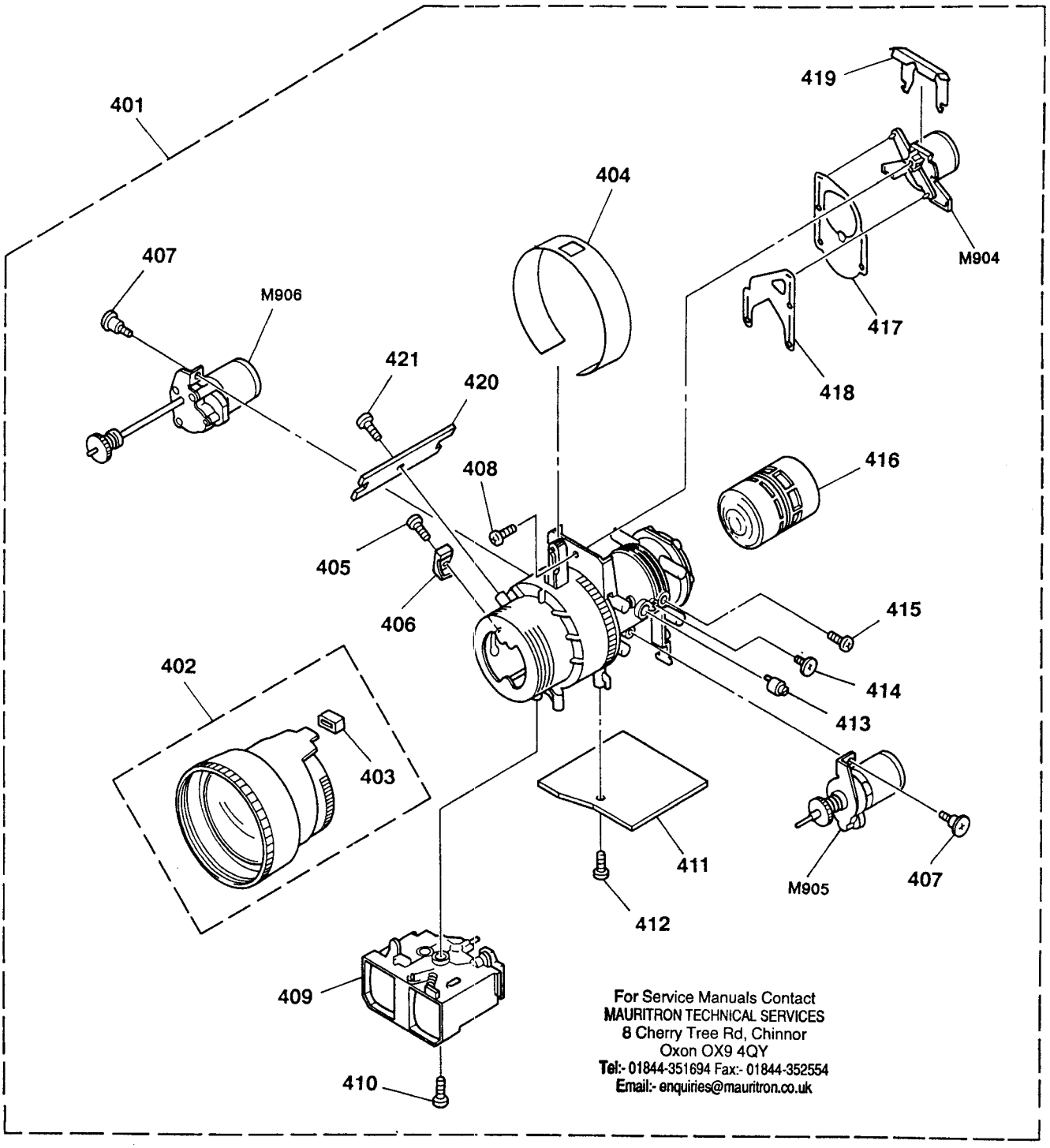

Ref. No.	Part No.	Description	Remark
401	1-547-481-11	LENS, ZOOM (VCL-8510XA)	
402	3-708-254-01	LENS ASSY, FOCUS	
403	3-708-243-01	RUBBER, (F) STOPPER	
404	3-708-246-01	SHEET, ZOOM	
405	3-707-445-01	SCREW, (N) STOPPER CLAMP	
406	3-707-446-01	STOPPER, (N)	
407	3-707-447-01	SCREW, MOTOR CLAMP	
408	3-707-444-01	SCREW, IG METER CLAMP	
409	3-708-248-01	BLOCK ASSY, AF	
410	3-708-249-01	SCREW, AF BLOCK	
411	3-708-250-01	PC BOARD ASSY, AF	
412	3-707-450-01	SCREW, AF BLOCK CLAMP	
413	3-707-453-01	ROLLER, ECCENTRIC	
414	3-707-454-01	SCREW	
415	3-707-455-01	SCREW, RELAY SET	
416	3-708-252-01	MIRROR TUBE UNIT, RELAY	
417	3-707-631-01	WING (A) ASSY, ZOOM	
418	3-707-632-01	WING, ZOOM (B)	
419	3-708-253-01	COVER, IG METER	
420	3-708-244-01	PC BOARD ASSY, SW	
421	3-707-761-01	SCREW, SW PC BOARD	
M904	3-708-245-01	METER, IG (IRIS)	
M905	3-708-251-01	MOTOR ASSY, PZ (ZOOM)	
M906	3-708-247-01	MOTOR ASSY, AF (FOCUS)	

CC-61P CD-60P

SECTION 6
ELECTRICAL PARTS LIST

NOTE:

The components identified by mark ⚠ or dotted line with mark ⚠ are critical for safety.
Replace only with part number specified.

When indicating parts by reference number, please include the board name.

- Due to standardization, replacements in the parts list may be different from the parts specified in the diagrams or the components used on the set.
- -XX, -X mean standardized parts, so they may have some difference from the original one.
- RESISTORS
  All resistors are in ohms
  METAL: Metal-film resistor
  METAL OXIDE: Metal Oxide-film resistor
  F : nonflammable
- Items marked "＊" are not stocked since they are seldom required for routine service. Some delay should be anticipated when ordering these items.
- SEMICONDUCTORS
  In each case, u: μ , for example:
  uA...: μA..., uPA...: μPA...,
  uPB...: μPB..., uPC...: μPC...,
  uPD...: μPD...
- CAPACITORS
  uF : μF
- COILS
  uH : μH

Ref. No.	Part No.	Description			Remark
	＊ A-7071-380-A	CC-61P BOARD, COMPLETE			
		**********			
		(Ref. No 10,000 Series)			
		< CONNECTOR >			
CN511	1-569-363-21	CONNECTOR, FPC 15P			
CN512	1-566-529-11	CONNECTOR, FPC (ZIF) 13P			
CN513	1-566-527-11	CONNECTOR, FPC (ZIF) 11P			
**********					
	＊ A-7062-777-A	CD-60P BOARD, COMPLETE			
		**********			
		(Ref. No 6,000 Series)			
	A-7068-173-A	DT-77F BOARD, COMPLETE (HIC)			
		< CAPACITOR >			
C101	1-126-200-11	ELECT CHIP	10uF	20%	35V
C102	1-162-974-11	CERAMIC CHIP	0.01uF		50V
C104	1-128-013-11	ELECT CHIP	1uF	20%	50V
C105	1-126-607-11	ELECT CHIP	47uF	20%	4V
C107	1-162-964-11	CERAMIC CHIP	0.001uF	10%	50V
C110	1-126-206-11	ELECT CHIP	100uF	20%	6.3V
C111	1-162-915-11	CERAMIC CHIP	10PF	0.5PF	50V
C112	1-164-005-11	CERAMIC CHIP	0.47uF		25V
C113	1-128-013-11	ELECT CHIP	1uF	20%	50V
C114	1-128-008-11	ELECT CHIP	3.3uF	20%	35V
C115	1-162-970-11	CERAMIC CHIP	0.01uF	10%	25V
C121	1-162-970-11	CERAMIC CHIP	0.01uF	10%	25V
C122	1-162-964-11	CERAMIC CHIP	0.001uF	10%	50V
C123	1-135-091-00	TANTALUM CHIP	1uF	20%	16V
C124	1-162-970-11	CERAMIC CHIP	0.01uF	10%	25V
C125	1-126-205-11	ELECT CHIP	47uF	20%	6.3V
C126	1-164-156-11	CERAMIC CHIP	0.1uF		25V
C127	1-162-970-11	CERAMIC CHIP	0.01uF	10%	25V
C128	1-162-964-11	CERAMIC CHIP	0.001uF	10%	50V
C129	1-163-809-11	CERAMIC CHIP	0.047uF	10%	25V
C130	1-162-970-11	CERAMIC CHIP	0.01uF	10%	25V
C131	1-162-638-11	CERAMIC CHIP	1uF		16V
C135	1-162-638-11	CERAMIC CHIP	1uF		16V
C136	1-162-974-11	CERAMIC CHIP	0.01uF		50V
C137	1-162-919-11	CERAMIC CHIP	22PF	5%	50V
C138	1-162-962-11	CERAMIC CHIP	470PF	10%	50V
C140	1-162-964-11	CERAMIC CHIP	0.001uF	10%	50V
C141	1-162-942-11	CERAMIC CHIP	12PF	5%	50V
C142	1-135-145-11	TANTALUM CHIP	0.47uF	10%	25V
C144	1-164-156-11	CERAMIC CHIP	0.1uF		25V
C147	1-164-156-11	CERAMIC CHIP	0.1uF		25V
C148	1-164-005-11	CERAMIC CHIP	0.47uF		25V
C187	1-162-966-11	CERAMIC CHIP	0.0022uF	10%	50V
C188	1-162-966-11	CERAMIC CHIP	0.0022uF	10%	50V
C189	1-162-966-11	CERAMIC CHIP	0.0022uF	10%	50V
C190	1-162-953-11	CERAMIC CHIP	100PF	5%	50V
C191	1-135-181-21	TANTALUM CHIP	4.7uF	20%	6.3V
C192	1-126-100-11	ELECT	10uF	20%	6.3V
		< CONNECTOR >			
CN101	＊ 1-565-876-11	PIN, CONNECTOR (PC BOARD) 4P			
		< TRIMMER >			
CT121	1-141-424-11	CAP, ADJ			
CT122	1-141-356-11	CAP, ADJ 6PF			
		< DIODE >			
D101	8-719-404-46	DIODE MA110			
D102	8-719-404-52	DIODE MA143			
D122	8-719-404-32	DIODE MA141WA			

For Service Manuals Contact
MAURITRON TECHNICAL SERVICES
8 Cherry Tree Rd, Chinnor
Oxon OX9 4QY
Tel:- 01844-351694 Fax:- 01844-352554
Email:- enquiries@mauritron.co.uk

Ref. No.	Part No.	Description				Remark
D123	8-719-404-46	DIODE	MA110			
D124	8-719-404-32	DIODE	MA141WA			
D125	8-719-949-46	DIODE	1T32			
D128	8-719-404-46	DIODE	MA110			
		< IC >				
IC121	8-752-326-08	IC	CXD1159Q			
		< COIL >				
L101	1-412-063-21	INDUCTOR CHIP	68uH			
L121	1-412-058-11	INDUCTOR CHIP	10uH			
L122	1-412-058-11	INDUCTOR CHIP	10uH			
L123	1-410-381-11	INDUCTOR CHIP	10uH			
L182	1-412-058-11	INDUCTOR CHIP	10uH			
L184	1-412-058-11	INDUCTOR CHIP	10uH			
		< TRANSISTOR >				
Q101	8-765-420-02	TRANSISTOR	2SK300-3/4			
Q102	8-729-905-35	TRANSISTOR	2SC4081			
Q121	8-729-907-47	TRANSISTOR	IMZ1			
Q122	8-729-402-78	TRANSISTOR	XN6401			
Q123	8-729-402-19	TRANSISTOR	XN6501			
Q125	8-729-905-35	TRANSISTOR	2SC4081			
Q126	8-729-907-47	TRANSISTOR	IMZ1			
Q129	8-729-905-23	TRANSISTOR	2SA1576			
Q130	8-729-905-35	TRANSISTOR	2SC4081			
Q131	8-729-907-47	TRANSISTOR	IMZ1			
Q132	8-729-907-47	TRANSISTOR	IMZ1			
Q133	8-729-907-47	TRANSISTOR	IMZ1			
Q135	8-729-907-47	TRANSISTOR	IMZ1			
Q136	8-729-402-45	TRANSISTOR	UN5212			
		< RESISTOR >				
R101	1-216-845-11	METAL CHIP	100K	5%	1/16W	
R102	1-216-840-11	METAL CHIP	39K	5%	1/16W	
R103	1-216-820-11	METAL CHIP	820	5%	1/16W	
R104	1-216-809-11	METAL CHIP	100	5%	1/16W	
R105	1-216-827-11	METAL CHIP	3.3K	5%	1/16W	
R108	1-216-864-11	METAL CHIP	0			
R110	1-216-839-11	METAL CHIP	33K	5%	1/16W	
R111	1-216-839-11	METAL CHIP	33K	5%	1/16W	
R112	1-216-821-11	METAL CHIP	1K	5%	1/16W	
R113	1-216-864-11	METAL CHIP	0			
R114	1-216-845-11	METAL CHIP	100K	5%	1/16W	
R115	1-216-821-11	METAL CHIP	1K	5%	1/16W	
R116	1-216-821-11	METAL CHIP	1K	5%	1/16W	
R117	1-216-825-11	METAL CHIP	2.2K	5%	1/16W	
R118	1-216-813-11	METAL CHIP	220	5%	1/16W	

Ref. No.	Part No.	Description				Remark
R119	1-216-821-11	METAL CHIP	1K	5%	1/16W	
R121	1-216-835-11	METAL CHIP	15K	5%	1/16W	
R122	1-216-857-11	METAL CHIP	1M	5%	1/16W	
R124	1-216-839-11	METAL CHIP	33K	5%	1/16W	
R125	1-216-845-11	METAL CHIP	100K	5%	1/16W	
R126	1-216-837-11	METAL CHIP	22K	5%	1/16W	
R127	1-216-820-11	METAL CHIP	820	5%	1/16W	
R128	1-216-843-11	METAL CHIP	68K	5%	1/16W	
R129	1-216-833-11	METAL CHIP	10K	5%	1/16W	
R130	1-216-835-11	METAL CHIP	15K	5%	1/16W	
R131	1-216-844-11	METAL CHIP	82K	5%	1/16W	
R132	1-216-844-11	METAL CHIP	82K	5%	1/16W	
R133	1-216-850-11	METAL CHIP	270K	5%	1/16W	
R207	1-216-841-11	METAL CHIP	47K	5%	1/16W	
R208	1-216-825-11	METAL CHIP	2.2K	5%	1/16W	
R209	1-216-825-11	METAL CHIP	2.2K	5%	1/16W	
R210	1-216-833-11	METAL CHIP	10K	5%	1/16W	
R215	1-216-842-11	METAL CHIP	56K	5%	1/16W	
R216	1-216-833-11	METAL CHIP	10K	5%	1/16W	
R217	1-216-833-11	METAL CHIP	10K	5%	1/16W	
R220	1-216-835-11	METAL CHIP	15K	5%	1/16W	
R221	1-216-840-11	METAL CHIP	39K	5%	1/16W	
R222	1-216-833-11	METAL CHIP	10K	5%	1/16W	
R226	1-216-864-11	METAL CHIP	0			
R229	1-216-864-11	METAL CHIP	0			
R230	1-216-833-11	METAL CHIP	10K	5%	1/16W	
R231	1-216-813-11	METAL CHIP	220	5%	1/16W	
R232	1-216-813-11	METAL CHIP	220	5%	1/16W	
R233	1-216-841-11	METAL CHIP	47K	5%	1/16W	
R234	1-216-841-11	METAL CHIP	47K	5%	1/16W	
R237	1-216-296-00	METAL CHIP	0	5%	1/8W	
		< FLEXIBLE BOARD >				
W102	1-639-048-11	FP-416 FLEXIBLE BOARD				
		< CRYSTAL >				
X121	1-579-076-11	VIBRATOR, CRYSTAL				
X122	1-567-733-11	VIBRATOR, CRYSTAL				

****

For Service Manuals Contact
MAURITRON TECHNICAL SERVICES
8 Cherry Tree Rd, Chinnor
Oxon OX9 4QY
Tel:- 01844-351694 Fax:- 01844-352554
Email:- enquiries@mauritron.co.uk

CK-49/ZK-13 CT-40P

Ref. No.	Part No.	Description			Remark
	A-7071-406-A	CK-49/ZK-13 MOUNT (Ref. No 5,000 Series)			
		**********			
*	3-942-267-01	HOLDER (CK), LCD			
		< CAPACITOR >			
C691	1-135-149-21	TANTALUM CHIP 2.2uF	20%	10V	
		< DIODE >			
D671	8-719-404-46	DIODE MA110			
D672	8-719-404-46	DIODE MA110			
		< IC >			
IC670	8-759-634-72	IC M34206M2-109FP			
		< COIL >			
L670	1-410-389-31	INDUCTOR CHIP 47uH			
		< DISPLAY PANEL >			
ND670	1-809-022-11	DISPLAY PANEL, LIQUID CRYSTAL			
		< RESISTOR >			
R690	1-216-121-00	METAL CHIP	1M	5%	1/10W
R691	1-216-295-00	METAL CHIP	0	5%	1/10W
R692	1-216-097-00	METAL CHIP	100K	5%	1/10W
		< SWITCH >			
S670	1-570-870-11	SWITCH, SLIDE (AUTO LOCK)			
S671	1-571-787-11	SWITCH, TACTILE (SHUTTER SPEED)			
S672	1-571-787-11	SWITCH, TACTILE (PROGRAM AE)			
S673	1-571-787-11	SWITCH, TACTILE (FOCUS)			
S674	1-571-684-11	SWITCH, TACTIL (PUSH AUTO)			
S675	1-571-684-11	SWITCH, TACTIL (BACK LIGHT)			
S676	1-571-787-11	SWITCH, TACTILE (WHT BAL)			
S681	1-571-684-11	SWITCH, TACTIL (FADER)			
		< FLEXIBLE BOARD >			
W670	1-639-046-11	FP-414 FLEXIBLE BOARD			
W671	1-639-047-11	FP-415 FLEXIBLE BOARD			
		< CRYSTAL >			
X670	1-567-152-00	VIBRATOR, CERAMIC (400MHz)			

****

For Service Manuals Contact
MAURITRON TECHNICAL SERVICES
8 Cherry Tree Rd, Chinnor
Oxon OX9 4QY
Tel:- 01844-351694 Fax:- 01844-352554
Email:- enquiries@mauritron.co.uk

Ref. No.	Part No.	Description			Remark
*	A-7062-779-A	CT-40P BOARD, COMPLETE			
		**********			
		(Ref. No 1,000 Series)			
		< CAPACITOR >			
C700	1-162-974-11	CERAMIC CHIP	0.01uF		50V
C701	1-162-974-11	CERAMIC CHIP	0.01uF		50V
C702	1-128-020-11	ELECT CHIP	10uF	0	6.3V
C703	1-163-038-00	CERAMIC CHIP	0.1uF		25V
C704	1-162-974-11	CERAMIC CHIP	0.01uF		50V
C706	1-135-177-21	TANTALUM CHIP	1uF	20%	20V
C708	1-162-915-11	CERAMIC CHIP	10PF	0.5PF	50V
C709	1-163-038-00	CERAMIC CHIP	0.1uF		25V
C710	1-128-020-11	ELECT CHIP	10uF	0	6.3V
C711	1-163-038-00	CERAMIC CHIP	0.1uF		25V
C717	1-128-015-11	ELECT CHIP	22uF	0	4V
C718	1-128-015-11	ELECT CHIP	22uF	0	4V
C720	1-162-974-11	CERAMIC CHIP	0.01uF		50V
C721	1-135-157-21	TANTALUM CHIP	10uF	20%	6.3V
C723	1-162-974-11	CERAMIC CHIP	0.01uF		50V
C724	1-162-974-11	CERAMIC CHIP	0.01uF		50V
C726	1-162-974-11	CERAMIC CHIP	0.01uF		50V
C727	1-162-974-11	CERAMIC CHIP	0.01uF		50V
C728	1-128-020-11	ELECT CHIP	10uF	0	6.3V
C729	1-162-974-11	CERAMIC CHIP	0.01uF		50V
C730	1-162-974-11	CERAMIC CHIP	0.01uF		50V
C734	1-135-157-21	TANTALUM CHIP	10uF	20%	6.3V
C735	1-164-156-11	CERAMIC CHIP	0.1uF		25V
C736	1-162-638-11	CERAMIC CHIP	1uF		16V
C737	1-164-156-11	CERAMIC CHIP	0.1uF		25V
C738	1-164-156-11	CERAMIC CHIP	0.1uF		25V
C739	1-164-156-11	CERAMIC CHIP	0.1uF		25V
C740	1-164-156-11	CERAMIC CHIP	0.1uF		25V
C741	1-162-917-11	CERAMIC CHIP	15PF	5%	50V
C742	1-162-974-11	CERAMIC CHIP	0.01uF		50V
C743	1-164-156-11	CERAMIC CHIP	0.1uF		25V
C744	1-162-974-11	CERAMIC CHIP	0.01uF		50V
C745	1-162-974-11	CERAMIC CHIP	0.01uF		50V
C746	1-164-227-11	CERAMIC CHIP	0.022uF	10%	25V
C747	1-164-227-11	CERAMIC CHIP	0.022uF	10%	25V
C748	1-162-974-11	CERAMIC CHIP	0.01uF		50V
C749	1-135-145-11	TANTALUM CHIP	0.47uF	10%	25V
C750	1-162-923-11	CERAMIC CHIP	47PF	5%	50V
C751	1-135-179-21	TANTAL. CHIP	2.2uF	20%	16V
C752	1-162-970-11	CERAMIC CHIP	0.01uF	10%	25V
C753	1-162-915-11	CERAMIC CHIP	10PF	0.5PF	50V
C754	1-162-958-11	CERAMIC CHIP	270PF	5%	50V
C755	1-162-958-11	CERAMIC CHIP	270PF	5%	50V
C756	1-162-638-11	CERAMIC CHIP	1uF		16V

Ref. No.	Part No.	Description			Remark
C757	1-163-038-00	CERAMIC CHIP	0.1uF		25V
C758	1-162-974-11	CERAMIC CHIP	0.01uF		50V
C759	1-162-974-11	CERAMIC CHIP	0.01uF		50V
C760	1-162-916-11	CERAMIC CHIP	12PF	5%	50V
C761	1-162-919-11	CERAMIC CHIP	22PF	5%	50V
C763	1-162-927-11	CERAMIC CHIP	100PF	5%	50V
C769	1-128-049-11	ELECT CHIP	1uF	0	50V
C770	1-126-153-11	ELECT	22uF	20%	6.3V
C773	1-163-809-11	CERAMIC CHIP	0.047uF	10%	25V
C774	1-162-965-11	CERAMIC CHIP	0.0015uF	10%	50V
C799	1-135-178-11	TANTAL. CHIP	1.5uF	20%	20V
C901	1-162-974-11	CERAMIC CHIP	0.01uF		50V
C902	1-135-157-21	TANTALUM CHIP	10uF	20%	6.3V
C903	1-162-947-11	CERAMIC CHIP	33PF	5%	50V
C904	1-162-962-11	CERAMIC CHIP	470PF	10%	50V
C905	1-162-997-11	CERAMIC CHIP	10PF	0.5PF	50V
C906	1-163-123-00	CERAMIC CHIP	180PF	5%	50V
C907	1-162-964-11	CERAMIC CHIP	0.001uF	10%	50V
C908	1-162-964-11	CERAMIC CHIP	0.001uF	10%	50V
C909	1-162-970-11	CERAMIC CHIP	0.01uF	10%	25V
C910	1-164-156-11	CERAMIC CHIP	0.1uF		25V
C911	1-162-974-11	CERAMIC CHIP	0.01uF		50V
C930	1-162-974-11	CERAMIC CHIP	0.01uF		50V
C931	1-135-178-11	TANTAL. CHIP	1.5uF	20%	20V
		< CONNECTOR >			
CN705	1-568-336-11	CONNECTOR, BOARD TO BOARD 20P			
		< TRIMMER >			
CT701	1-141-331-11	CAP, CHIP TRIMMER 30PF			
CT702	1-141-331-11	CAP, CHIP TRIMMER 30PF			
CT901	1-141-331-11	CAP, CHIP TRIMMER 30PF			
CT902	1-141-417-11	CAP, ADJ 30PF			
		< DIODE >			
D901	8-719-949-46	DIODE 1T32			
D903	8-719-404-46	DIODE MA110			
D904	8-719-404-46	DIODE MA110			
D905	8-719-404-46	DIODE MA110			
D906	8-719-404-46	DIODE MA110			
		< IC >			
IC701	8-759-998-30	IC CF79028PG			
IC702	8-759-515-28	IC MS6264CLL-15FC			
IC703	8-752-039-49	IC CXA1393AN			
IC704	8-759-634-47	IC M51285BGP			
IC707	8-759-710-29	IC NJM2235M			
IC708	8-759-710-09	IC NJM2233AM			
IC709	8-759-710-09	IC NJM2233AM			

Ref. No.	Part No.	Description	Remark
IC713	8-759-234-20	IC TC7S08F	
IC901	8-759-970-80	IC MB673198U	
IC902	8-759-153-41	IC uPD6451AGT-611	
		< COIL >	
L700	1-412-028-11	INDUCTOR CHIP 4.7uH	
L701	1-410-384-31	INDUCTOR CHIP 18uH	
L702	1-412-028-11	INDUCTOR CHIP 4.7uH	
L703	1-412-028-11	INDUCTOR CHIP 4.7uH	
L704	1-412-032-11	INDUCTOR CHIP 100uH	
L705	1-412-028-11	INDUCTOR CHIP 4.7uH	
L901	1-412-032-11	INDUCTOR CHIP 100uH	
L902	1-412-143-11	INDUCTOR 39uH	
L903	1-412-282-41	INDUCTOR 470uH	
		< TRANSISTOR >	
Q701	8-729-925-91	TRANSISTOR DTC115EU	
Q702	8-729-907-03	TRANSISTOR FMG5	
Q703	8-729-905-18	TRANSISTOR DTC144EU	
Q704	8-729-905-35	TRANSISTOR 2SC4081	
Q705	8-729-905-24	TRANSISTOR 2SA1576	
Q706	8-729-905-18	TRANSISTOR DTC144EU	
Q707	8-729-905-35	TRANSISTOR 2SC4081	
Q708	8-729-905-15	TRANSISTOR DTC144WU	
Q709	8-729-905-35	TRANSISTOR 2SC4081	
Q710	8-729-905-35	TRANSISTOR 2SC4081	
Q720	8-729-905-18	TRANSISTOR DTC144EU	
Q726	8-729-905-23	TRANSISTOR 2SA1576	
Q727	8-729-905-35	TRANSISTOR 2SC4081	
Q728	8-729-905-35	TRANSISTOR 2SC4081	
Q729	8-729-905-18	TRANSISTOR DTC144EU	
Q730	8-729-905-12	TRANSISTOR DTA144EU	
Q800	8-729-905-18	TRANSISTOR DTC144EU	
Q801	8-729-905-23	TRANSISTOR 2SA1576	
		< RESISTOR >	
R700	1-216-833-11	METAL CHIP 10K 5% 1/16W	
R702	1-216-833-11	METAL CHIP 10K 5% 1/16W	
R704	1-216-833-11	METAL CHIP 10K 5% 1/16W	
R706	1-216-833-11	METAL CHIP 10K 5% 1/16W	
R708	1-216-833-11	METAL CHIP 10K 5% 1/16W	
R711	1-216-833-11	METAL CHIP 10K 5% 1/16W	
R713	1-216-833-11	METAL CHIP 10K 5% 1/16W	
R715	1-216-823-11	METAL CHIP 1.5K 5% 1/16W	
R716	1-216-829-11	METAL CHIP 4.7K 5% 1/16W	
R717	1-216-826-11	METAL CHIP 2.7K 5% 1/16W	
R720	1-216-864-11	METAL CHIP 0	
R722	1-216-817-11	METAL CHIP 470 5% 1/16W	
R723	1-216-295-00	METAL CHIP 0 5% 1/10W	

For Service Manuals Contact
MAURITRON TECHNICAL SERVICES
8 Cherry Tree Rd, Chinnor
Oxon OX9 4QY
Tel:- 01844-351694 Fax:- 01844-352554
Email:- enquiries@mauritron.co.uk

CT-40P

Ref. No.	Part No.	Description			Remark
R724	1-216-845-11	METAL CHIP	100K	5%	1/16W
R725	1-216-833-11	METAL CHIP	10K	5%	1/16W
R729	1-216-864-11	METAL CHIP	0		
R731	1-216-847-11	METAL CHIP	150K	5%	1/16W
R732	1-216-847-11	METAL CHIP	150K	5%	1/16W
R734	1-216-821-11	METAL CHIP	1K	5%	1/16W
R735	1-216-821-11	METAL CHIP	1K	5%	1/16W
R736	1-216-821-11	METAL CHIP	1K	5%	1/16W
R737	1-216-841-11	METAL CHIP	47K	5%	1/16W
R739	1-216-295-00	METAL CHIP	0	5%	1/10W
R741	1-216-833-11	METAL CHIP	10K	5%	1/16W
R742	1-216-833-11	METAL CHIP	10K	5%	1/16W
R745	1-216-845-11	METAL CHIP	100K	5%	1/16W
R747	1-216-829-11	METAL CHIP	4.7K	5%	1/16W
R748	1-216-829-11	METAL CHIP	4.7K	5%	1/16W
R749	1-216-837-11	METAL CHIP	22K	5%	1/16W
R750	1-216-838-11	METAL CHIP	27K	5%	1/16W
R751	1-216-825-11	METAL CHIP	2.2K	5%	1/16W
R753	1-216-825-11	METAL CHIP	2.2K	5%	1/16W
R754	1-216-825-11	METAL CHIP	2.2K	5%	1/16W
R755	1-216-829-11	METAL CHIP	4.7K	5%	1/16W
R757	1-216-833-11	METAL CHIP	10K	5%	1/16W
R758	1-216-823-11	METAL CHIP	1.5K	5%	1/16W
R759	1-216-806-11	METAL GLAZE	56	5%	1/16W
R760	1-216-821-11	METAL CHIP	1K	5%	1/16W
R761	1-216-814-11	METAL CHIP	270	5%	1/16W
R762	1-216-845-11	METAL CHIP	100K	5%	1/16W
R763	1-216-843-11	METAL CHIP	68K	5%	1/16W
R764	1-216-832-11	METAL CHIP	8.2K	5%	1/16W
R766	1-216-857-11	METAL CHIP	1M	5%	1/16W
R770	1-216-864-11	METAL CHIP	0		
R772	1-216-864-11	METAL CHIP	0		
R776	1-216-815-11	METAL CHIP	330	5%	1/16W
R777	1-216-823-11	METAL CHIP	1.5K	5%	1/16W
R780	1-216-829-11	METAL CHIP	4.7K	5%	1/16W
R781	1-216-836-11	METAL CHIP	18K	5%	1/16W
R782	1-216-828-11	METAL CHIP	3.9K	5%	1/16W
R783	1-216-832-11	METAL CHIP	8.2K	5%	1/16W
R784	1-216-821-11	METAL CHIP	1K	5%	1/16W
R787	1-216-822-11	METAL CHIP	1.2K	5%	1/16W
R788	1-216-822-11	METAL CHIP	1.2K	5%	1/16W
R789	1-216-829-11	METAL CHIP	4.7K	5%	1/16W
R793	1-216-831-11	METAL CHIP	6.8K	5%	1/16W
R795	1-216-864-11	METAL CHIP	0		
R796	1-216-827-11	METAL CHIP	3.3K	5%	1/16W
R797	1-216-833-11	METAL CHIP	10K	5%	1/16W
R798	1-216-829-11	METAL CHIP	4.7K	5%	1/16W
R901	1-216-864-11	METAL CHIP	0		

Ref. No.	Part No.	Description			Remark
R902	1-216-864-11	METAL CHIP	0		
R903	1-216-864-11	METAL CHIP	0		
R904	1-216-825-11	METAL CHIP	2.2K	5%	1/16W
R905	1-216-845-11	METAL CHIP	100K	5%	1/16W
R906	1-216-845-11	METAL CHIP	100K	5%	1/16W
R907	1-216-839-11	METAL CHIP	33K	5%	1/16W
R908	1-216-845-11	METAL CHIP	100K	5%	1/16W
R909	1-216-833-11	METAL CHIP	10K	5%	1/16W
R911	1-216-838-11	METAL CHIP	27K	5%	1/16W
R912	1-216-864-11	METAL CHIP	0		
R913	1-216-829-11	METAL CHIP	4.7K	5%	1/16W
R914	1-216-833-11	METAL CHIP	10K	5%	1/16W
R915	1-216-830-11	METAL CHIP	5.6K	5%	1/16W
R916	1-216-833-11	METAL CHIP	10K	5%	1/16W
R917	1-216-842-11	METAL CHIP	56K	5%	1/16W
R918	1-216-834-11	METAL CHIP	12K	5%	1/16W
R919	1-216-864-11	METAL CHIP	0		
R920	1-216-828-11	METAL CHIP	3.9K	5%	1/16W
R921	1-216-825-11	METAL CHIP	2.2K	5%	1/16W
R923	1-216-824-11	METAL CHIP	1.8K	5%	1/16W
R924	1-216-821-11	METAL CHIP	1K	5%	1/16W
R925	1-216-821-11	METAL CHIP	1K	5%	1/16W
R926	1-216-833-11	METAL CHIP	10K	5%	1/16W
R927	1-216-864-11	METAL CHIP	0		
R930	1-216-864-11	METAL CHIP	0		
R932	1-216-864-11	METAL CHIP	0		
R933	1-216-841-11	METAL CHIP	47K	5%	1/16W
R934	1-216-840-11	METAL CHIP	39K	5%	1/16W
R959	1-216-829-11	METAL CHIP	4.7K	5%	1/16W
R960	1-216-825-11	METAL CHIP	2.2K	5%	1/16W
R961	1-216-825-11	METAL CHIP	2.2K	5%	1/16W
R962	1-216-821-11	METAL CHIP	1K	5%	1/16W
R963	1-216-815-11	METAL CHIP	330	5%	1/16W
R964	1-216-825-11	METAL CHIP	2.2K	5%	1/16W
R966	1-216-833-11	METAL CHIP	10K	5%	1/16W
R967	1-216-825-11	METAL CHIP	2.2K	5%	1/16W
R968	1-216-814-11	METAL CHIP	270	5%	1/16W
R969	1-216-833-11	METAL CHIP	10K	5%	1/16W
R970	1-216-823-11	METAL CHIP	1.5K	5%	1/16W
R976	1-216-829-11	METAL CHIP	4.7K	5%	1/16W
R977	1-216-829-11	METAL CHIP	4.7K	5%	1/16W
R978	1-216-833-11	METAL CHIP	10K	5%	1/16W
R979	1-216-864-11	METAL CHIP	0		
R982	1-216-809-11	METAL CHIP	100	5%	1/16W
R983	1-216-809-11	METAL CHIP	100	5%	1/16W
R984	1-216-809-11	METAL CHIP	100	5%	1/16W

For Service Manuals Contact
MAURITRON TECHNICAL SERVICES
8 Cherry Tree Rd, Chinnor
Oxon OX9 4QY
Tel:- 01844-351694 Fax:- 01844-352554
Email:- enquiries@mauritron.co.uk

Ref. No.	Part No.	Description			Remark
		< VARIABLE RESISTOR >			
RV702	1-238-089-11	RES, ADJ, CERMET 4.7K			
RV703	1-238-092-11	RES, ADJ, CERMET 47K			
		< CRYSTAL >			
X701	1-567-733-11	VIBRATOR, CRYSTAL			
X703	1-578-690-11	VIBRATOR, CERAMIC			
**********					
*	A-7062-782-A	DK-12P BOARD, COMPLETE			
		**********			
		(Ref. No 5,000 Series)			
*	3-942-236-01	HOLDER, TALLY			
		< CAPACITOR >			
C950	1-163-038-00	CERAMIC CHIP	0.1uF		25V
C951	1-163-003-11	CERAMIC CHIP	330PF	10%	50V
C952	1-163-005-11	CERAMIC CHIP	470PF	10%	50V
		< CONNECTOR >			
CN950	1-566-532-11	CONNECTOR, FPC (ZIF) 16P			
		< DIODE >			
D920	8-719-812-41	LED	TLR124, RED		
D921	8-719-404-46	DIODE	MA110		
D922	8-719-159-30	DIODE	RD8.2SB		
D923	8-719-159-30	DIODE	RD8.2SB		
D924	8-719-159-30	DIODE	RD8.2SB		
D925	8-719-159-30	DIODE	RD8.2SB		
		< IC >			
IC950	8-759-145-63	IC	uPD7564G-540-E1		
		< COIL >			
L950	1-410-389-31	INDUCTOR CHIP	47uH		
L951	1-410-389-31	INDUCTOR CHIP	47uH		
		< TRANSISTOR >			
Q950	8-729-901-01	TRANSISTOR	DTC144EK		
		< RESISTOR >			
R950	1-216-073-00	METAL CHIP	10K	5%	1/10W
R951	1-216-073-00	METAL CHIP	10K	5%	1/10W
R952	1-216-073-00	METAL CHIP	10K	5%	1/10W
R953	1-216-089-00	METAL CHIP	47K	5%	1/10W
R954	1-216-030-00	METAL CHIP	160	5%	1/10W
R955	1-216-025-00	METAL CHIP	100	5%	1/10W
R961	1-216-049-00	METAL CHIP	1K	5%	1/10W
		< SWITCH >			
S920	1-571-787-11	SWITCH, TACTILE (EDIT -)			
S921	1-571-787-11	SWITCH, TACTILE (EDIT +)			
S950	1-571-787-11	SWITCH, TACTILE (TITLE 1)			
S951	1-571-787-11	SWITCH, TACTILE (TITLE 2)			
S952	1-571-787-11	SWITCH, TACTILE			
S953	1-571-787-11	SWITCH, TACTILE			
		< VIBLATOR >			
X950	1-577-163-21	VIBLATOR, CERAMIC (700KHz)			
**********					
*	1-628-060-12	FP-89 FLEXIBLE BOARD			
		**********			
		(Ref. No 11,000 Series)			
	3-728-869-02	HOLDER, SENSOR			
		< DIODE >			
D301	8-719-820-44	PHOTO COUPLER TLP907			
		< TRANSISTOR >			
Q301	8-729-906-48	TRANSISTOR EE-TP109			
		< SWITCH >			
S301	1-572-173-11	SWITCH, SLIDE (ENCODER) (MODE)			
S903	1-571-099-11	SWITCH (CASSETTE DOWN)			
**********					
*	1-628-061-12	FP-90 FLEXIBLE BOARD			
		**********			
		(Ref. No 12,000 Series)			
	3-728-837-01	HOLDER, LED			
	3-728-869-02	HOLDER, SENSOR			
		< DIODE >			
D302	8-719-940-81	DIODE GL452S			
D303	8-719-820-44	PHOTO COUPLER TLP907			
		< TRANSISTOR >			
Q302	8-729-906-48	TRANSISTOR	EE-TP109		
		< SWITCH >			
S302	1-572-298-11	SWITCH, PUSH (REC PROOF, TAPE SELECT)			

For Service Manuals Contact
MAURITRON TECHNICAL SERVICES
8 Cherry Tree Rd, Chinnor
Oxon OX9 4QY
Tel:- 01844-351694 Fax:- 01844-352554
Email:- enquiries@mauritron.co.uk

FP-249 FU-104P

Ref. No.	Part No.	Description		Remark
	1-633-922-11	FP-249 FLEXIBLE BOARD		
		**********		
	1-569-286-11	CONNECTOR, CARD EDGE 5P		
**********				
	* A-7062-781-A	FU-104P BOARD, COMPLETE		
		**********		
		(Ref. No 10,000 Series)		
		< CAPACITOR >		
C503	1-164-156-11	CERAMIC CHIP	0.1uF	25V
C504	1-135-157-21	TANTALUM CHIP	10uF 20%	6.3V
C505	1-164-227-11	CERAMIC CHIP	0.022uF 10%	25V
C506	1-163-038-00	CERAMIC CHIP	0.1uF	25V
C507	1-164-227-11	CERAMIC CHIP	0.022uF 10%	25V
C514	1-162-917-11	CERAMIC CHIP	15PF 5%	50V
C515	1-164-156-11	CERAMIC CHIP	0.1uF	25V
C516	1-135-149-21	TANTALUM CHIP	2.2uF 20%	10V
C517	1-164-156-11	CERAMIC CHIP	0.1uF	25V
C518	1-135-155-21	TANTALUM CHIP	4.7uF 10%	10V
C519	1-164-156-11	CERAMIC CHIP	0.1uF	25V
C994	1-162-966-11	CERAMIC CHIP	0.0022uF 10%	50V
C995	1-128-292-11	ELECT	220uF 20%	10V
C996	1-162-974-11	CERAMIC CHIP	0.01uF	50V
		< CONNECTOR >		
CN502	1-569-480-11	CONNECTOR, FPC 23P		
CN504	1-569-479-21	CONNECTOR, FPC 21P		
CN992	1-565-528-11	PIN, CONNECTOR (PC BOARD) 3P		
		< TRIMMER >		
CT501	1-141-331-11	CAP, CHIP TRIMMER		
CT501	1-141-424-11	CAP, ADJ		
		< DIODE >		
D501	8-719-421-27	DIODE	MA728	
D503	8-719-404-46	DIODE	MA110	
D504	8-719-404-46	DIODE	MA110	
D505	8-719-404-46	DIODE	MA110	
D506	8-719-404-46	DIODE	MA110	
D507	8-719-404-46	DIODE	MA110	
D510	8-719-812-41	LED	TLR124, RED	
D510	8-719-940-99	DIODE	SLR-34VC3	
D511	8-719-404-46	DIODE	MA110	
		< IC >		
IC501	8-759-154-18	IC	uPD75316GF-116-3B9	
IC502	8-759-511-22	IC	CXA1448N	
IC503	8-759-937-54	IC	S-81250HG-RD	
		< JACK >		
J901	1-537-281-21	TERMINAL BOARD (BATTERY/EASY CONNECTOR)		
		< COIL >		
L501	1-412-032-11	INDUCTOR CHIP	100uH	
L990	1-412-026-11	INDUCTOR CHIP	1uH	
L991	1-410-337-11	INDUCTOR	1uH	
L992	1-410-337-11	INDUCTOR	1uH	
L996	1-412-026-11	INDUCTOR CHIP	1uH	
L997	1-412-026-11	INDUCTOR CHIP	1uH	
		< IC LINK >		
PS990	⚠ 1-532-841-21	LINK, IC		
PS991	⚠ 1-532-840-21	LINK, IC		
PS992	⚠ 1-532-840-21	LINK, IC		
		< TRANSISTOR >		
Q509	8-729-904-20	TRANSISTOR	FMA2	
Q579	8-729-905-12	TRANSISTOR	DTA144EU	
Q990	8-729-101-07	TRANSISTOR	2SB798-DLDK	
Q991	8-729-905-35	TRANSISTOR	2SC4081	
		< RESISTOR >		
R501	1-216-841-11	METAL CHIP	47K 5%	1/16W
R504	1-216-821-11	METAL CHIP	1K 5%	1/16W
R505	1-216-821-11	METAL CHIP	1K 5%	1/16W
R511	1-216-829-11	METAL CHIP	4.7K 5%	1/16W
R512	1-216-829-11	METAL CHIP	4.7K 5%	1/16W
R513	1-216-829-11	METAL CHIP	4.7K 5%	1/16W
R514	1-216-829-11	METAL CHIP	4.7K 5%	1/16W
R515	1-216-829-11	METAL CHIP	4.7K 5%	1/16W
R516	1-216-829-11	METAL CHIP	4.7K 5%	1/16W
R517	1-216-829-11	METAL CHIP	4.7K 5%	1/16W
R518	1-216-851-11	METAL CHIP	330K 5%	1/16W
R520	1-216-864-11	METAL CHIP	0	
R521	1-216-809-11	METAL CHIP	100 5%	1/16W
R522	1-216-809-11	METAL CHIP	100 5%	1/16W
R523	1-216-841-11	METAL CHIP	47K 5%	1/16W
R524	1-216-841-11	METAL CHIP	47K 5%	1/16W
R525	1-216-841-11	METAL CHIP	47K 5%	1/16W
R527	1-216-841-11	METAL CHIP	47K 5%	1/16W
R528	1-216-841-11	METAL CHIP	47K 5%	1/16W
R529	1-216-841-11	METAL CHIP	47K 5%	1/16W
R530	1-216-841-11	METAL CHIP	47K 5%	1/16W
R531	1-216-809-11	METAL CHIP	100 5%	1/16W
R532	1-216-809-11	METAL CHIP	100 5%	1/16W

The components identified by mark ⚠ or dotted line with mark ⚠ are critical for safety.
Replace only with part number specified.

For Service Manuals Contact
MAURITRON TECHNICAL SERVICES
8 Cherry Tree Rd, Chinnor
Oxon OX9 4QY
Tel:- 01844-351694 Fax:- 01844-352554
Email:- enquiries@mauritron.co.uk

Ref. No.	Part No.	Description			Remark
R533	1-216-821-11	METAL CHIP	1K	5%	1/16W
R534	1-216-821-11	METAL CHIP	1K	5%	1/16W
R535	1-216-821-11	METAL CHIP	1K	5%	1/16W
R536	1-216-821-11	METAL CHIP	1K	5%	1/16W
R537	1-216-817-11	METAL CHIP	470	5%	1/16W
R538	1-216-821-11	METAL CHIP	1K	5%	1/16W
R539	1-216-841-11	METAL CHIP	47K	5%	1/16W
R540	1-216-841-11	METAL CHIP	47K	5%	1/16W
R541	1-216-841-11	METAL CHIP	47K	5%	1/16W
R542	1-216-833-11	METAL CHIP	10K	5%	1/16W
R543	1-216-833-11	METAL CHIP	10K	5%	1/16W
R544	1-216-833-11	METAL CHIP	10K	5%	1/16W
R545	1-216-821-11	METAL CHIP	1K	5%	1/16W
R546	1-216-821-11	METAL CHIP	1K	5%	1/16W
R547	1-216-833-11	METAL CHIP	10K	5%	1/16W
R548	1-216-833-11	METAL CHIP	10K	5%	1/16W
R549	1-216-833-11	METAL CHIP	10K	5%	1/16W
R550	1-216-833-11	METAL CHIP	10K	5%	1/16W
R551	1-216-833-11	METAL CHIP	10K	5%	1/16W
R552	1-216-833-11	METAL CHIP	10K	5%	1/16W
R553	1-216-829-11	METAL CHIP	4.7K	5%	1/16W
R557	1-216-861-11	METAL CHIP	2.2M	5%	1/16W
R558	1-216-841-11	METAL CHIP	47K	5%	1/16W
R559	1-216-841-11	METAL CHIP	47K	5%	1/16W
R563	1-216-864-11	METAL CHIP	0		
R564	1-216-829-11	METAL CHIP	4.7K	5%	1/16W
R571	1-216-829-11	METAL CHIP	4.7K	5%	1/16W
R572	1-216-821-11	METAL CHIP	1K	5%	1/16W
R573	1-216-821-11	METAL CHIP	1K	5%	1/16W
R575	1-216-864-11	METAL CHIP	0		
R578	1-216-833-11	METAL CHIP	10K	5%	1/16W
R579	1-216-864-11	METAL CHIP	0		
R590	1-216-833-11	METAL CHIP	10K	5%	1/16W
R990	1-216-138-00	METAL CHIP	3.3	5%	1/8W
R991	1-216-830-11	METAL CHIP	5.6K	5%	1/16W
R992	1-216-820-11	METAL CHIP	820	5%	1/16W
R993	1-216-836-11	METAL CHIP	18K	5%	1/16W
R994	1-216-807-11	METAL CHIP	68	5%	1/16W

< SWITCH >

S501	1-571-275-31	SWITCH, SLIDE
S502	1-572-284-11	SWITCH, SLIDE

< FLEXIBLE BOARD >

W501	1-633-978-11	FP-295 FLEXIBLE BOARD
W502	1-633-977-11	FP-293 FLEXIBLE BOARD
W901	1-633-982-11	FP-294 FLEXIBLE BOARD

Ref. No.	Part No.	Description			Remark
		< VIBRATOR >			
X501	1-577-101-11	VIBRATOR, CERAMIC			
X502	1-527-997-21	VIBRATOR, CRYSTAL			

****

* A-7071-425-A LI-36P BOARD, COMPLETE

****

(Ref. No 6,000 Series)

< CAPACITOR >

C970	1-163-035-00	CERAMIC CHIP	0.047uF		50V
C971	1-163-035-00	CERAMIC CHIP	0.047uF		50V

< CONNECTOR >

CN961	1-565-874-11	PIN, CONNECTOR (PC BOARD) 2P

< JACK >

J902	1-550-104-11	HOLDER, BATTERY (LITHIUM)

****

* A-7062-784-A MC-82P BOARD, COMPLETE

****

< CAPACITOR >

C650	1-162-953-11	CERAMIC CHIP	100PF	5%	50V
C651	1-162-964-11	CERAMIC CHIP	0.001uF	10%	50V
C653	1-163-809-11	CERAMIC CHIP	0.047uF	10%	25V
C655	1-164-232-11	CERAMIC CHIP	0.01uF		50V
C656	1-126-154-11	ELECT	47uF	20%	6.3V
C657	1-162-963-11	CERAMIC CHIP	680PF	10%	50V
C659	1-162-638-11	CERAMIC CHIP	1uF		16V
C661	1-162-953-11	CERAMIC CHIP	100PF	5%	50V
C662	1-162-964-11	CERAMIC CHIP	0.001uF	10%	50V
C665	1-163-809-11	CERAMIC CHIP	0.047uF	10%	25V
C667	1-164-232-11	CERAMIC CHIP	0.01uF		50V
C668	1-126-154-11	ELECT	47uF	20%	6.3V
C669	1-162-963-11	CERAMIC CHIP	680PF	10%	50V
C671	1-162-638-11	CERAMIC CHIP	1uF		16V
C673	1-162-953-11	CERAMIC CHIP	100PF	5%	50V
C674	1-162-953-11	CERAMIC CHIP	100PF	5%	50V
C675	1-162-638-11	CERAMIC CHIP	1uF		16V
C676	1-162-638-11	CERAMIC CHIP	1uF		16V
C677	1-162-964-11	CERAMIC CHIP	0.001uF	10%	50V
C678	1-126-155-11	ELECT	100uF	20%	6.3V
C679	1-162-638-11	CERAMIC CHIP	1uF		16V
C680	1-126-155-11	ELECT	100uF	20%	6.3V
C681	1-162-964-11	CERAMIC CHIP	0.001uF	10%	50V

For Service Manuals Contact
MAURITRON TECHNICAL SERVICES
8 Cherry Tree Rd, Chinnor
Oxon OX9 4QY
Tel:- 01844-351694 Fax:- 01844-352554
Email:- enquiries@mauritron.co.uk

Ref. No.	Part No.	Description			Remark
C683	1-162-964-11	CERAMIC CHIP	0.001uF	10% 50V	
C684	1-162-964-11	CERAMIC CHIP	0.001uF	10% 50V	
C685	1-164-633-11	CERAMIC CHIP	0.1uF	10% 25V	
C686	1-164-633-11	CERAMIC CHIP	0.1uF	10% 25V	
C687	1-162-638-11	CERAMIC CHIP	1uF	16V	
		< CONNECTOR >			
CN650	1-565-529-21	PIN, CONNECTOR (PC BOARD) 4P			
CN652	1-565-874-11	PIN, CONNECTOR (PC BOARD) 2P			
		< DIODE >			
D652	8-719-106-43	DIODE	RD9.1M		
D655	8-719-404-46	DIODE	MA110		
		< IC >			
IC650	8-759-822-37	IC	LA7293M-TE-L		
IC651	8-759-822-37	IC	LA7293M-TE-L		
		< JACK >			
J650	1-507-899-00	JACK (SMALL TYPE) (EXT MIC)			
J651	1-563-454-11	JACK, MINIATURE (RFU DC OUT)			
		< COIL >			
L650	1-410-369-11	INDUCTOR CHIP	1uH		
L651	1-410-369-11	INDUCTOR CHIP	1uH		
L652	1-410-192-51	INDUCTOR CHIP	1uH		
L653	1-410-192-51	INDUCTOR CHIP	1uH		
L654	1-410-369-11	INDUCTOR CHIP	1uH		
		< TRANSISTOR >			
Q650	8-729-109-44	TRANSISTOR	2SK94		
Q651	8-729-905-35	TRANSISTOR	2SC4081		
Q653	8-729-905-35	TRANSISTOR	2SC4081		
Q654	8-729-905-12	TRANSISTOR	DTA144EU		
Q655	8-729-905-12	TRANSISTOR	DTA144EU		
Q656	8-729-109-44	TRANSISTOR	2SK94		
Q657	8-729-905-35	TRANSISTOR	2SC4081		
Q658	8-729-904-07	TRANSISTOR	FMG2-T-149		
Q659	8-729-905-35	TRANSISTOR	2SC4081		
		< RESISTOR >			
R650	1-216-833-11	METAL CHIP	10K	5% 1/16W	
R652	1-216-833-11	METAL CHIP	10K	5% 1/16W	
R653	1-216-844-11	METAL CHIP	82K	5% 1/16W	
R654	1-216-845-11	METAL CHIP	100K	5% 1/16W	
R655	1-216-826-11	METAL CHIP	2.7K	5% 1/16W	
R656	1-216-828-11	METAL CHIP	3.9K	5% 1/16W	
R657	1-216-833-11	METAL CHIP	10K	5% 1/16W	
R659	1-216-833-11	METAL CHIP	10K	5% 1/16W	

Ref. No.	Part No.	Description			Remark
R660	1-216-844-11	METAL CHIP	82K	5% 1/16W	
R661	1-216-845-11	METAL CHIP	100K	5% 1/16W	
R662	1-216-826-11	METAL CHIP	2.7K	5% 1/16W	
R663	1-216-828-11	METAL CHIP	3.9K	5% 1/16W	
R664	1-216-831-11	METAL CHIP	6.8K	5% 1/16W	
R667	1-216-831-11	METAL CHIP	6.8K	5% 1/16W	
R670	1-216-842-11	METAL CHIP	56K	5% 1/16W	
R671	1-216-842-11	METAL CHIP	56K	5% 1/16W	
R672	1-216-845-11	METAL CHIP	100K	5% 1/16W	
R673	1-216-845-11	METAL CHIP	100K	5% 1/16W	
R674	1-216-841-11	METAL CHIP	47K	5% 1/16W	
R678	1-216-841-11	METAL CHIP	47K	5% 1/16W	
R679	1-216-857-11	METAL CHIP	1M	5% 1/16W	
R680	1-216-857-11	METAL CHIP	1M	5% 1/16W	
R681	1-216-841-11	METAL CHIP	47K	5% 1/16W	
R682	1-216-864-11	METAL CHIP	0		
R683	1-216-864-11	METAL CHIP	0		
R696	1-216-825-11	METAL CHIP	2.2K	5% 1/16W	
R697	1-216-825-11	METAL CHIP	2.2K	5% 1/16W	
		< SWITCH >			
S650	1-553-977-00	SWITCH, SLIDE			
S651	1-571-787-41	SWITCH, TACTILE			

****

\# A-7062-778-A SS-136 (PB) BOARD, COMPLETE

****

(Ref. No 3,000 Series)

1-236-550-11 BPF
1-236-551-11 BPF
1-562-880-11 CONNECTOR, CARD EDGE 15P
1-569-346-11 CONNECTOR, FPC (TRANSLATION) 10P
1-569-420-11 CONNECTOR, BOARD TO BOARD 2P

1-633-924-11 FP-248 FLEXIBLE BOARD
1-633-942-11 FL-26 BOARD
3-831-441-11 CLOTH, UNWEAVED (25X6X0.5)

< CAPACITOR >

C400	1-162-970-11	CERAMIC CHIP	0.01uF	10% 25V	
C401	1-162-970-11	CERAMIC CHIP	0.01uF	10% 25V	
C402	1-162-970-11	CERAMIC CHIP	0.01uF	10% 25V	
C406	1-162-970-11	CERAMIC CHIP	0.01uF	10% 25V	
C407	1-162-970-11	CERAMIC CHIP	0.01uF	10% 25V	
C408	1-163-038-00	CERAMIC CHIP	0.1uF	25V	
C409	1-163-038-00	CERAMIC CHIP	0.1uF	25V	
C501	1-126-157-11	ELECT	10uF	20% 16V	
C502	1-126-160-11	ELECT	1uF	20% 50V	
C504	1-163-038-00	CERAMIC CHIP	0.1uF	25V	

For Service Manuals Contact
MAURITRON TECHNICAL SERVICES
8 Cherry Tree Rd, Chinnor
Oxon OX9 4QY
Tel:- 01844-351694 Fax:- 01844-352554
Email:- enquiries@mauritron.co.uk

Ref. No.	Part No.	Description			Remark
C505	1-164-633-11	CERAMIC CHIP	0.1uF	10%	25V
C506	1-126-163-11	ELECT	4.7uF	20%	50V
C507	1-164-330-21	CERAMIC CHIP	0.22uF	10%	16V
C508	1-164-330-21	CERAMIC CHIP	0.22uF	10%	16V
C509	1-162-967-11	CERAMIC CHIP	0.0033uF	10%	50V
C510	1-162-967-11	CERAMIC CHIP	0.0033uF	10%	50V
C511	1-162-967-11	CERAMIC CHIP	0.0033uF	10%	50V
C512	1-164-232-11	CERAMIC CHIP	0.01uF		50V
C513	1-128-078-11	ELECT	33uF	20%	10V
C514	1-130-495-00	MYLAR	0.1uF	5%	50V
C515	1-162-964-11	CERAMIC CHIP	0.001uF	10%	50V
C516	1-164-633-11	CERAMIC CHIP	0.1uF	10%	25V
C517	1-162-969-11	CERAMIC CHIP	0.0068uF	10%	25V
C518	1-163-038-00	CERAMIC CHIP	0.1uF		25V
C519	1-164-330-21	CERAMIC CHIP	0.22uF	10%	16V
C520	1-164-330-21	CERAMIC CHIP	0.22uF	10%	16V
C521	1-164-330-21	CERAMIC CHIP	0.22uF	10%	16V
C522	1-162-638-11	CERAMIC CHIP	1uF		16V
C523	1-128-078-11	ELECT	33uF	20%	10V
C524	1-163-035-00	CERAMIC CHIP	0.047uF		50V
C525	1-126-162-11	ELECT	3.3uF	20%	50V
C526	1-163-038-00	CERAMIC CHIP	0.1uF		25V
C528	1-162-917-11	CERAMIC CHIP	15PF	5%	50V
C529	1-162-917-11	CERAMIC CHIP	15PF	5%	50V
C530	1-126-157-11	ELECT	10uF	20%	16V
C531	1-126-157-11	ELECT	10uF	20%	16V
C532	1-162-961-11	CERAMIC CHIP	330PF	10%	50V
C533	1-162-968-11	CERAMIC CHIP	0.0047uF	10%	50V
C534	1-162-967-11	CERAMIC CHIP	0.0033uF	10%	50V
C535	1-163-035-00	CERAMIC CHIP	0.047uF		50V
C536	1-162-962-11	CERAMIC CHIP	470PF	10%	50V
C537	1-162-964-11	CERAMIC CHIP	0.001uF	10%	50V
C538	1-162-949-11	CERAMIC CHIP	47PF	5%	50V
C539	1-162-941-11	CERAMIC CHIP	10PF	0.5PF	50V
C540	1-162-965-11	CERAMIC CHIP	0.0015uF	10%	50V
C541	1-162-945-11	CERAMIC CHIP	22PF	5%	50V
C542	1-164-247-11	CERAMIC CHIP	0.047uF	10%	16V
C543	1-164-247-11	CERAMIC CHIP	0.047uF	10%	16V
C545	1-162-964-11	CERAMIC CHIP	0.001uF	10%	50V
C546	1-164-633-11	CERAMIC CHIP	0.1uF	10%	25V
C547	1-164-232-11	CERAMIC CHIP	0.01uF		50V
C548	1-162-638-11	CERAMIC CHIP	1uF		16V
C549	1-162-638-11	CERAMIC CHIP	1uF		16V
C550	1-162-966-11	CERAMIC CHIP	0.0022uF	10%	50V
C551	1-163-023-00	CERAMIC CHIP	0.015uF	5%	50V
C552	1-163-038-00	CERAMIC CHIP	0.1uF		25V
C553	1-162-962-11	CERAMIC CHIP	470PF	10%	50V
C554	1-164-232-11	CERAMIC CHIP	0.01uF		50V
C555	1-162-970-11	CERAMIC CHIP	0.01uF	10%	25V

Ref. No.	Part No.	Description			Remark
C556	1-163-035-00	CERAMIC CHIP	0.047uF		50V
C557	1-163-081-00	CERAMIC CHIP	0.22uF		25V
C559	1-162-921-11	CERAMIC CHIP	33PF	5%	50V
C560	1-162-921-11	CERAMIC CHIP	33PF	5%	50V
C561	1-163-038-00	CERAMIC CHIP	0.1uF		25V
C562	1-126-157-11	ELECT	10uF	20%	16V
C563	1-126-157-11	ELECT	10uF	20%	16V
C564	1-163-038-00	CERAMIC CHIP	0.1uF		25V
C565	1-162-964-11	CERAMIC CHIP	0.001uF	10%	50V
C566	1-162-964-11	CERAMIC CHIP	0.001uF	10%	50V
C567	1-163-037-11	CERAMIC CHIP	0.022uF	10%	25V
C568	1-163-037-11	CERAMIC CHIP	0.022uF	10%	25V
C569	1-163-038-00	CERAMIC CHIP	0.1uF		25V
C592	1-163-038-00	CERAMIC CHIP	0.1uF		25V
C609	1-128-078-11	ELECT	33uF	20%	10V
C610	1-124-589-11	ELECT	47uF	20%	16V
C620	1-164-227-11	CERAMIC CHIP	0.022uF	10%	25V
C625	1-163-038-00	CERAMIC CHIP	0.1uF		25V
C720	1-162-967-11	CERAMIC CHIP	0.0033uF	10%	50V
C901	1-162-921-11	CERAMIC CHIP	33PF	5%	50V
C902	1-164-633-11	CERAMIC CHIP	0.1uF	10%	25V
C903	1-164-227-11	CERAMIC CHIP	0.022uF	10%	25V
C904	1-162-964-11	CERAMIC CHIP	0.001uF	10%	50V
C905	1-164-227-11	CERAMIC CHIP	0.022uF	10%	25V
C906	1-164-227-11	CERAMIC CHIP	0.022uF	10%	25V
C907	1-162-964-11	CERAMIC CHIP	0.001uF	10%	50V
C908	1-162-964-11	CERAMIC CHIP	0.001uF	10%	50V
C909	1-128-078-11	ELECT	33uF	20%	10V
C910	1-128-078-11	ELECT	33uF	20%	10V
C911	1-128-078-11	ELECT	33uF	20%	10V
C912	1-127-558-11	ELECT (SOLID)	10uF	20%	10V
C913	1-128-078-11	ELECT	33uF	20%	10V
C914	1-127-561-11	ELECT (SOLID)	33uF	20%	10V
C915	1-127-558-11	ELECT (SOLID)	10uF	20%	10V
C916	1-163-038-00	CERAMIC CHIP	0.1uF		25V
C917	1-163-038-00	CERAMIC CHIP	0.1uF		25V
C918	1-164-633-11	CERAMIC CHIP	0.1uF	10%	25V
C920	1-164-633-11	CERAMIC CHIP	0.1uF	10%	25V
C921	1-164-633-11	CERAMIC CHIP	0.1uF	10%	25V
C922	1-164-633-11	CERAMIC CHIP	0.1uF	10%	25V
C923	1-162-966-11	CERAMIC CHIP	0.0022uF	10%	50V
C925	1-164-217-11	CERAMIC CHIP	150PF	0.25PF	50V
C930	1-162-967-11	CERAMIC CHIP	0.0033uF	10%	50V
C931	1-162-967-11	CERAMIC CHIP	0.0033uF	10%	50V
C932	1-162-967-11	CERAMIC CHIP	0.0033uF	10%	50V
C935	1-164-156-11	CERAMIC CHIP	0.1uF		25V

< CONNECTOR >

CN501	* 1-565-211-11	CONNECTOR, FPC (ZIF) 22P	

SS-136

Ref. No.	Part No.	Description	Remark
CN502	1-569-364-21	CONNECTOR, FPC 19P	
CN503	1-565-878-11	PIN, CONNECTOR (PC BOARD) 6P	
CN505	1-565-874-11	PIN, CONNECTOR (PC BOARD) 2P	
CN506	1-569-627-11	CONNECTOR, BOARD TO BOARD 16P	
CN507	1-569-626-11	CONNECTOR, BOARD TO BOARD 20P	
CN508	1-565-530-11	PIN, CONNECTOR (PC BOARD) 5P	
CN509	1-568-207-11	CONNECTOR, FPC (ZIF) 23P	
		< DIODE >	
D501	8-719-941-86	DIODE DAN202U	
D506	8-719-941-86	DIODE DAN202U	
D510	8-719-404-46	DIODE MA110	
D901	8-719-938-75	DIODE SB05-05CP	
D902	8-719-938-75	DIODE SB05-05CP	
D903	8-719-938-78	DIODE SB10-05PCP	
		< IC >	
IC501	8-752-818-70	IC CXP80116-830Q	
IC502	8-759-148-05	IC CXA8010M	
IC503	8-759-990-55	IC CXA8006M	
IC504	8-752-056-72	IC CXA1127M	
IC506	8-752-055-48	IC CXA1204Q	
IC507	8-759-100-93	IC uPC393G2	
IC507	8-759-509-91	IC XRA10393F	
IC507	8-759-998-92	IC LM393DR	
IC508	8-759-748-72	IC BR93C46F	
IC508	8-759-979-38	IC AK93C46F	
IC901	8-759-500-42	IC MB3783PFV	
		< COIL >	
L503	1-408-795-21	INDUCTOR CHIP 330uH	
L505	1-410-381-11	INDUCTOR CHIP 10uH	
L515	1-412-028-11	INDUCTOR CHIP 4.7uH	
L901	1-424-104-11	COIL, CHOKE 10uH	
L902	1-424-104-11	COIL, CHOKE 10uH	
L903	1-424-106-11	COIL, CHOKE 47uH	
L904	1-424-106-11	COIL, CHOKE 47uH	
L905	1-424-105-11	COIL, CHOKE 22uH	
L906	1-412-027-11	INDUCTOR, CHIP 2.2uH	
L907	1-412-029-11	INDUCTOR, CHIP 10uH	
L908	1-412-029-11	INDUCTOR, CHIP 10uH	
L909	1-412-029-11	INDUCTOR, CHIP 10uH	
		< IC LINK >	
PS501	1-532-605-00	LINK, IC 0.4A	

Ref. No.	Part No.	Description	Remark
		< TRANSISTOR >	
Q400	8-729-905-35	TRANSISTOR 2SC4081T106Q	
Q401	8-729-905-35	TRANSISTOR 2SC4081T106Q	
Q402	8-729-905-35	TRANSISTOR 2SC4081T106Q	
Q403	8-729-905-35	TRANSISTOR 2SC4081T106Q	
Q404	8-729-905-35	TRANSISTOR 2SC4081T106Q	
Q502	8-729-905-35	TRANSISTOR 2SC4081T106Q	
Q503	8-729-905-24	TRANSISTOR 2SA1576T106S	
Q505	8-729-905-35	TRANSISTOR 2SC4081T106Q	
Q506	8-729-905-24	TRANSISTOR 2SA1576T106S	
Q507	8-729-905-35	TRANSISTOR 2SC4081T106Q	
Q508	8-729-905-24	TRANSISTOR 2SA1576T106S	
Q509	8-729-905-35	TRANSISTOR 2SC4081T106Q	
Q510	8-729-905-35	TRANSISTOR 2SC4081T106Q	
Q511	8-729-905-24	TRANSISTOR 2SA1576T106S	
Q512	8-729-907-00	TRANSISTOR DTC114EU	
Q513	8-729-905-35	TRANSISTOR 2SC4081T106Q	
Q514	8-729-905-35	TRANSISTOR 2SC4081T106Q	
Q515	8-729-905-18	TRANSISTOR DTC144EU	
Q516	8-729-905-18	TRANSISTOR DTC144EU	
Q540	8-729-822-48	TRANSISTOR FC101-TR	
Q901	8-729-805-25	TRANSISTOR 2SB1121-ST-TD	
Q902	8-729-805-25	TRANSISTOR 2SB1121-ST-TD	
Q903	8-729-805-25	TRANSISTOR 2SB1121-ST-TD	
Q904	8-729-820-47	TRANSISTOR 2SB1202FAT-TL	
Q905	8-729-905-35	TRANSISTOR 2SC4081T106Q	
		< RESISTOR >	
R400	1-216-837-11	METAL CHIP 22K 5% 1/16W	
R401	1-216-837-11	METAL CHIP 22K 5% 1/16W	
R402	1-216-823-11	METAL CHIP 1.5K 5% 1/16W	
R403	1-216-821-11	METAL CHIP 1K 5% 1/16W	
R404	1-216-821-11	METAL CHIP 1K 5% 1/16W	
R405	1-216-825-11	METAL CHIP 2.2K 5% 1/16W	
R406	1-216-825-11	METAL CHIP 2.2K 5% 1/16W	
R407	1-216-837-11	METAL CHIP 22K 5% 1/16W	
R408	1-216-837-11	METAL CHIP 22K 5% 1/16W	
R409	1-216-825-11	METAL CHIP 2.2K 5% 1/16W	
R410	1-216-821-11	METAL CHIP 1K 5% 1/16W	
R411	1-216-821-11	METAL CHIP 1K 5% 1/16W	
R412	1-216-825-11	METAL CHIP 2.2K 5% 1/16W	
R413	1-216-827-11	METAL CHIP 3.3K 5% 1/16W	
R414	1-216-837-11	METAL CHIP 22K 5% 1/16W	
R415	1-216-837-11	METAL CHIP 22K 5% 1/16W	
R416	1-216-825-11	METAL CHIP 2.2K 5% 1/16W	
R501	1-216-851-11	METAL CHIP 330K 5% 1/16W	
R502	1-216-849-11	METAL CHIP 220K 5% 1/16W	
R503	1-216-841-11	METAL CHIP 47K 5% 1/16W	

For Service Manuals Contact
MAURITRON TECHNICAL SERVICES
8 Cherry Tree Rd, Chinnor
Oxon OX9 4QY
Tel:- 01844-351694 Fax:- 01844-352554
Email:- enquiries@mauritron.co.uk

Ref. No.	Part No.	Description			Remark
R504	1-216-833-11	METAL CHIP	10K	5%	1/16W
R506	1-216-845-11	METAL CHIP	100K	5%	1/16W
R507	1-216-833-11	METAL CHIP	10K	5%	1/16W
R508	1-216-833-11	METAL CHIP	10K	5%	1/16W
R510	1-216-845-11	METAL CHIP	100K	5%	1/16W
R511	1-216-833-11	METAL CHIP	10K	5%	1/16W
R512	1-216-833-11	METAL CHIP	10K	5%	1/16W
R513	1-216-827-11	METAL CHIP	3.3K	5%	1/16W
R514	1-216-833-11	METAL CHIP	10K	5%	1/16W
R515	1-216-827-11	METAL CHIP	3.3K	5%	1/16W
R516	1-216-833-11	METAL CHIP	10K	5%	1/16W
R517	1-216-851-11	METAL CHIP	330K	5%	1/16W
R518	1-216-841-11	METAL CHIP	47K	5%	1/16W
R519	1-216-827-11	METAL CHIP	3.3K	5%	1/16W
R520	1-216-833-11	METAL CHIP	10K	5%	1/16W
R521	1-216-845-11	METAL CHIP	100K	5%	1/16W
R522	1-216-833-11	METAL CHIP	10K	5%	1/16W
R523	1-216-845-11	METAL CHIP	100K	5%	1/16W
R524	1-216-833-11	METAL CHIP	10K	5%	1/16W
R525	1-216-845-11	METAL CHIP	100K	5%	1/16W
R526	1-216-833-11	METAL CHIP	10K	5%	1/16W
R527	1-216-845-11	METAL CHIP	100K	5%	1/16W
R528	1-216-833-11	METAL CHIP	10K	5%	1/16W
R529	1-216-845-11	METAL CHIP	100K	5%	1/16W
R530	1-216-833-11	METAL CHIP	10K	5%	1/16W
R531	1-216-845-11	METAL CHIP	100K	5%	1/16W
R532	1-216-829-11	METAL CHIP	4.7K	5%	1/16W
R534	1-216-845-11	METAL CHIP	100K	5%	1/16W
R535	1-216-843-11	METAL CHIP	68K	5%	1/16W
R536	1-216-857-11	METAL CHIP	1M	5%	1/16W
R537	1-216-833-11	METAL CHIP	10K	5%	1/16W
R538	1-216-833-11	METAL CHIP	10K	5%	1/16W
R539	1-216-833-11	METAL CHIP	10K	5%	1/16W
R540	1-216-845-11	METAL CHIP	100K	5%	1/16W
R541	1-216-833-11	METAL CHIP	10K	5%	1/16W
R542	1-216-837-11	METAL CHIP	22K	5%	1/16W
R543	1-216-829-11	METAL CHIP	4.7K	5%	1/16W
R544	1-216-837-11	METAL CHIP	22K	5%	1/16W
R545	1-216-829-11	METAL CHIP	4.7K	5%	1/16W
R546	1-216-837-11	METAL CHIP	22K	5%	1/16W
R547	1-216-829-11	METAL CHIP	4.7K	5%	1/16W
R548	1-217-671-11	METAL CHIP	1	5%	1/10W
R549	1-217-671-11	METAL CHIP	1	5%	1/10W
R550	1-217-671-11	METAL CHIP	1	5%	1/10W
R551	1-217-671-11	METAL CHIP	1	5%	1/10W
R552	1-216-037-00	METAL CHIP	330	5%	1/10W
R553	1-216-833-11	METAL CHIP	10K	5%	1/16W
R555	1-216-845-11	METAL CHIP	100K	5%	1/16W
R556	1-216-827-11	METAL CHIP	3.3K	5%	1/16W

Ref. No.	Part No.	Description			Remark
R558	1-216-691-11	METAL CHIP	47K	0.5%	1/10W
R559	1-216-691-11	METAL CHIP	47K	0.5%	1/10W
R560	1-216-827-11	METAL CHIP	3.3K	5%	1/16W
R561	1-216-825-11	METAL CHIP	2.2K	5%	1/16W
R562	1-216-813-11	METAL CHIP	220	5%	1/16W
R563	1-216-789-11	METAL CHIP	2.2	5%	1/16W
R564	1-216-789-11	METAL CHIP	2.2	5%	1/16W
R565	1-216-789-11	METAL CHIP	2.2	5%	1/16W
R566	1-216-833-11	METAL CHIP	10K	5%	1/16W
R567	1-216-833-11	METAL CHIP	10K	5%	1/16W
R568	1-216-817-11	METAL CHIP	470	5%	1/16W
R569	1-216-817-11	METAL CHIP	470	5%	1/16W
R571	1-216-841-11	METAL CHIP	47K	5%	1/16W
R572	1-216-841-11	METAL CHIP	47K	5%	1/16W
R573	1-216-841-11	METAL CHIP	47K	5%	1/16W
R574	1-216-841-11	METAL CHIP	47K	5%	1/16W
R575	1-216-817-11	METAL CHIP	470	5%	1/16W
R576	1-216-813-11	METAL CHIP	220	5%	1/16W
R577	1-216-811-11	METAL CHIP	150	5%	1/16W
R578	1-216-817-11	METAL CHIP	470	5%	1/16W
R579	1-216-803-11	METAL CHIP	33	5%	1/16W
R582	1-216-864-11	METAL CHIP	0		
R583	1-216-833-11	METAL CHIP	10K	5%	1/16W
R586	1-216-827-11	METAL CHIP	3.3K	5%	1/16W
R587	1-216-827-11	METAL CHIP	3.3K	5%	1/16W
R589	1-216-829-11	METAL CHIP	4.7K	5%	1/16W
R590	1-216-827-11	METAL CHIP	3.3K	5%	1/16W
R591	1-216-827-11	METAL CHIP	3.3K	5%	1/16W
R592	1-216-829-11	METAL CHIP	4.7K	5%	1/16W
R594	1-216-835-11	METAL CHIP	15K	5%	1/16W
R595	1-216-839-11	METAL CHIP	33K	5%	1/16W
R596	1-216-833-11	METAL CHIP	10K	5%	1/16W
R597	1-216-821-11	METAL CHIP	1K	5%	1/16W
R598	1-216-809-11	METAL CHIP	100	5%	1/16W
R599	1-216-809-11	METAL CHIP	100	5%	1/16W
R600	1-216-831-11	METAL CHIP	6.8K	5%	1/16W
R601	1-216-839-11	METAL CHIP	33K	5%	1/16W
R602	1-216-839-11	METAL CHIP	33K	5%	1/16W
R603	1-216-857-11	METAL CHIP	1M	5%	1/16W
R604	1-216-837-11	METAL CHIP	22K	5%	1/16W
R605	1-216-833-11	METAL CHIP	10K	5%	1/16W
R606	1-216-837-11	METAL CHIP	22K	5%	1/16W
R607	1-216-857-11	METAL CHIP	1M	5%	1/16W
R608	1-216-854-11	METAL CHIP	560K	5%	1/16W
R609	1-216-833-11	METAL CHIP	10K	5%	1/16W
R610	1-216-845-11	METAL CHIP	100K	5%	1/16W
R611	1-216-845-11	METAL CHIP	100K	5%	1/16W
R613	1-216-845-11	METAL CHIP	100K	5%	1/16W
R614	1-216-833-11	METAL CHIP	10K	5%	1/16W

For Service Manuals Contact
MAURITRON TECHNICAL SERVICES
8 Cherry Tree Rd, Chinnor
Oxon OX9 4QY
Tel:- 01844-351694 Fax:- 01844-352554
Email:- enquiries@mauritron.co.uk

SS-136 SW-175P

Ref. No.	Part No.	Description			Remark
R615	1-216-851-11	METAL CHIP	330K	5%	1/16W
R616	1-216-857-11	METAL CHIP	1M	5%	1/16W
R618	1-216-847-11	METAL CHIP	150K	5%	1/16W
R619	1-216-837-11	METAL CHIP	22K	5%	1/16W
R620	1-216-837-11	METAL CHIP	22K	5%	1/16W
R621	1-216-857-11	METAL CHIP	1M	5%	1/16W
R622	1-216-821-11	METAL CHIP	1K	5%	1/16W
R623	1-216-833-11	METAL CHIP	10K	5%	1/16W
R624	1-216-833-11	METAL CHIP	10K	5%	1/16W
R625	1-216-845-11	METAL CHIP	100K	5%	1/16W
R626	1-216-833-11	METAL CHIP	10K	5%	1/16W
R627	1-216-833-11	METAL CHIP	10K	5%	1/16W
R628	1-216-829-11	METAL CHIP	4.7K	5%	1/16W
R629	1-216-182-00	METAL GLAZE	220	5%	1/8W
R630	1-216-182-00	METAL GLAZE	220	5%	1/8W
R631	1-216-815-11	METAL CHIP	330	5%	1/16W
R632	1-216-813-11	METAL CHIP	220	5%	1/16W
R689	1-216-841-11	METAL CHIP	47K	5%	1/16W
R714	1-216-827-11	METAL CHIP	3.3K	5%	1/16W
R715	1-216-831-11	METAL CHIP	6.8K	5%	1/16W
R716	1-216-829-11	METAL CHIP	4.7K	5%	1/16W
R717	1-216-829-11	METAL CHIP	4.7K	5%	1/16W
R719	1-216-841-11	METAL CHIP	47K	5%	1/16W
R720	1-216-841-11	METAL CHIP	47K	5%	1/16W
R726	1-216-829-11	METAL CHIP	4.7K	5%	1/16W
R727	1-216-833-11	METAL CHIP	10K	5%	1/16W
R728	1-216-821-11	METAL CHIP	1K	5%	1/16W
R730	1-216-837-11	METAL CHIP	22K	5%	1/16W
R735	1-216-825-11	METAL CHIP	2.2K	5%	1/16W
R761	1-216-829-11	METAL CHIP	4.7K	5%	1/16W
R762	1-216-827-11	METAL CHIP	3.3K	5%	1/16W
R763	1-216-837-11	METAL CHIP	22K	5%	1/16W
R764	1-216-857-11	METAL CHIP	1M	5%	1/16W
R765	1-216-825-11	METAL CHIP	2.2K	5%	1/16W
R810	1-216-841-11	METAL CHIP	47K	5%	1/16W
R811	1-216-821-11	METAL CHIP	1K	5%	1/16W
R812	1-216-821-11	METAL CHIP	1K	5%	1/16W
R813	1-216-821-11	METAL CHIP	1K	5%	1/16W
R840	1-216-296-00	METAL CHIP	0	5%	1/8W
R841	1-216-296-00	METAL CHIP	0	5%	1/8W
R842	1-216-296-00	METAL CHIP	0	5%	1/8W
R850	1-216-827-11	METAL CHIP	3.3K	5%	1/16W
R851	1-216-864-11	METAL CHIP	0		
R855	1-216-809-11	METAL CHIP	100	5%	1/16W
R857	1-216-861-11	METAL CHIP	2.2M	5%	1/16W
R901	1-216-831-11	METAL CHIP	6.8K	5%	1/16W
R902	1-216-829-11	METAL CHIP	4.7K	5%	1/16W
R903	1-216-829-11	METAL CHIP	4.7K	5%	1/16W
R904	1-216-825-11	METAL CHIP	2.2K	5%	1/16W
R905	1-216-823-11	METAL CHIP	1.5K	5%	1/16W
R906	1-216-823-11	METAL CHIP	1.5K	5%	1/16W
R907	1-216-823-11	METAL CHIP	1.5K	5%	1/16W
R908	1-216-166-00	METAL GLAZE	47	5%	1/8W
R909	1-216-166-00	METAL GLAZE	47	5%	1/8W
R910	1-216-164-00	METAL GLAZE	39	5%	1/8W
R911	1-216-845-11	METAL CHIP	100K	5%	1/16W
R912	1-216-833-11	METAL CHIP	10K	5%	1/16W
R913	1-216-813-11	METAL CHIP	220	5%	1/16W
R914	1-216-831-11	METAL CHIP	6.8K	5%	1/16W
R915	1-216-833-11	METAL CHIP	10K	5%	1/16W
R916	1-216-833-11	METAL CHIP	10K	5%	1/16W
R924	1-216-821-11	METAL CHIP	1K	5%	1/16W
R927	1-216-833-11	METAL CHIP	10K	5%	1/16W

< VARIABLE RESISTOR >

RV901	1-238-089-11	RES, ADJ CERMET 4.7K
RV902	1-238-087-11	RES, ADJ CERMET 1K

< FLEXIBLE BOARD >

W510	1-633-923-11	FP-252 FLEXIBLE BOARD

< VIBRATOR >

X501	1-577-467-21	VIBRATOR, CRYSTAL (16MHz)
X502	1-567-827-11	VIBRATOR, CRYSTAL

****

* A-7071-428-A SW-175P BOARD, COMPLETE

****

(Ref. No 2,000 Series)

< CONNECTOR >

CN930	* 1-566-761-11	PIN, CONNECTOR (PC BOARD) 6P	
CN931	1-575-846-11	CONNECTOR, FPC (NON ZIF) 6P	

< DIODE >

D900	8-719-977-34	DIODE	DTZ12
D901	8-719-977-34	DIODE	DTZ12
D902	8-719-404-46	DIODE	MA110
D903	8-719-977-34	DIODE	DTZ12
D904	8-719-977-34	DIODE	DTZ12
D905	8-719-404-46	DIODE	MA110
D906	8-719-404-46	DIODE	MA110
D907	8-719-404-46	DIODE	MA110
D908	8-719-976-97	DIODE	DTZ5.1

For Service Manuals Contact
MAURITRON TECHNICAL SERVICES
8 Cherry Tree Rd, Chinnor
Oxon OX9 4QY
Tel:- 01844-351694 Fax:- 01844-352554
Email:- enquiries@mauritron.co.uk

Ref. No.	Part No.	Description			Remark
		< JACK >			
J900	1-507-929-11	JACK (EARPHONE)			
J901	1-565-276-21	JACK, ULTRA SMALL 1P (REMOTE)			
		< COIL >			
L900	1-410-369-11	INDUCTOR CHIP 1uH			
L901	1-410-369-11	INDUCTOR CHIP 1uH			
L902	1-410-369-11	INDUCTOR CHIP 1uH			
L903	1-410-192-51	INDUCTOR CHIP 1uH			
L904	1-410-369-11	INDUCTOR CHIP 1uH			
		< TRANSISTOR >			
Q900	8-729-901-01	TRANSISTOR DTC144EK			
Q901	8-729-902-XX	TRANSISTOR DTC114TK			
		< RESISTOR >			
R900	1-216-073-00	METAL CHIP	10K	5%	1/10W
R901	1-216-073-00	METAL CHIP	10K	5%	1/10W
R902	1-216-295-00	METAL CHIP	0	5%	1/10W
R915	1-216-296-00	METAL CHIP	0	5%	1/8W
		< SWITCH >			
S900	1-570-870-11	SWITCH, SLIDE (STANDBY/LOCK)			
S901	1-571-838-11	SWITCH, TACTIL (START/STOP)			

****

* A-7062-780-A VA-70P BOARD, COMPLETE (AEP/UK)
****
* A-7062-851-A VA-70PB BOARD, COMPLETE (AUS/E)
****
(Ref. No 1,000 Series)

3-719-695-01 SCREW (M1.7X3.5), SPECIAL HEAD
3-744-842-01 SUPPORT, CT PC BOARD
8-759-823-21 IC CXA-1536Q-L-E1

< CAPACITOR >

C002	1-162-947-11	CERAMIC CHIP	33PF	5%	50V
C071	1-128-004-11	ELECT CHIP	10uF	20%	16V
C072	1-164-227-11	CERAMIC CHIP	0.022uF	10%	25V
C101	1-162-974-11	CERAMIC CHIP	0.01uF		50V
C102	1-128-004-11	ELECT CHIP	10uF	20%	16V
C103	1-163-035-00	CERAMIC CHIP	0.047uF		50V
C104	1-162-947-11	CERAMIC CHIP	33PF	5%	50V
C105	1-162-965-11	CERAMIC CHIP	0.0015uF	10%	50V
C108	1-162-958-11	CERAMIC CHIP	270PF	5%	50V
C109	1-162-937-11	CERAMIC CHIP	6PF	0.5PF	50V
C110	1-162-941-11	CERAMIC CHIP	10PF	0.5PF	50V
C111	1-162-995-11	CERAMIC CHIP	0.022uF		50V
C112	1-162-970-11	CERAMIC CHIP	0.01uF	10%	25V
C113	1-162-942-11	CERAMIC CHIP	12PF	5%	50V
C114	1-162-970-11	CERAMIC CHIP	0.01uF	10%	25V
C115	1-162-974-11	CERAMIC CHIP	0.01uF		50V
C116	1-135-180-21	TANTALUM CHIP	3.3uF	20%	6.3V
C117	1-162-947-11	CERAMIC CHIP	33PF	5%	50V
C121	1-164-222-11	CERAMIC CHIP	0.22uF		25V
C122	1-128-004-11	ELECT CHIP	10uF	20%	16V
C123	1-162-954-11	CERAMIC CHIP	120PF	5%	50V
C125	1-164-458-11	CERAMIC CHIP	43PF	5%	50V
C127	1-162-948-11	CERAMIC CHIP	39PF	5%	50V
C129	1-162-974-11	CERAMIC CHIP	0.01uF		50V
C131	1-162-955-11	CERAMIC CHIP	150PF	5%	50V
C132	1-162-974-11	CERAMIC CHIP	0.01uF		50V
C134	1-162-974-11	CERAMIC CHIP	0.01uF		50V
C135	1-162-974-11	CERAMIC CHIP	0.01uF		50V
C137	1-162-974-11	CERAMIC CHIP	0.01uF		50V
C141	1-162-974-11	CERAMIC CHIP	0.01uF		50V
C143	1-162-948-11	CERAMIC CHIP	39PF	5%	50V
C144	1-162-947-11	CERAMIC CHIP	33PF	5%	50V
C145	1-164-156-11	CERAMIC CHIP	0.1uF		25V
C146	1-162-995-11	CERAMIC CHIP	0.022uF		50V
C147	1-162-995-11	CERAMIC CHIP	0.022uF		50V
C181	1-164-005-11	CERAMIC CHIP	0.47uF		25V
C182	1-162-974-11	CERAMIC CHIP	0.01uF		50V
C183	1-162-974-11	CERAMIC CHIP	0.01uF		50V
C201	1-162-959-11	CERAMIC CHIP	330PF	5%	50V
C202	1-162-952-11	CERAMIC CHIP	82PF	5%	50V
C203	1-164-005-11	CERAMIC CHIP	0.47uF		25V
C204	1-128-004-11	ELECT CHIP	10uF	20%	16V
C205	1-128-004-11	ELECT CHIP	10uF	20%	16V
C206	1-162-974-11	CERAMIC CHIP	0.01uF		50V
C207	1-162-974-11	CERAMIC CHIP	0.01uF		50V
C208	1-128-004-11	ELECT CHIP	10uF	20%	16V
C209	1-126-154-11	ELECT	47uF	20%	6.3V
C210	1-128-008-11	ELECT CHIP	3.3uF	20%	35V
C211	1-128-004-11	ELECT CHIP	10uF	20%	16V
C212	1-162-974-11	CERAMIC CHIP	0.01uF		50V
C213	1-128-008-11	ELECT CHIP	3.3uF	20%	35V
C214	1-162-950-11	CERAMIC CHIP	56PF	5%	50V
C215	1-128-004-11	ELECT CHIP	10uF	20%	16V
C216	1-126-607-11	ELECT CHIP	47uF	20%	4V
C217	1-162-954-11	CERAMIC CHIP	120PF	5%	50V
C218	1-126-209-11	ELECT CHIP	100uF	20%	4V
C219	1-162-955-11	CERAMIC CHIP	150PF	5%	50V
C220	1-162-943-11	CERAMIC CHIP	15PF	5%	50V
C221	1-162-953-11	CERAMIC CHIP	100PF	5%	50V
C222	1-162-948-11	CERAMIC CHIP	39PF	5%	50V

For Service Manuals Contact
MAURITRON TECHNICAL SERVICES
8 Cherry Tree Rd, Chinnor
Oxon OX9 4QY
Tel:- 01844-351694 Fax:- 01844-352554
Email:- enquiries@mauritron.co.uk

VA-70P VA-70PB

Ref. No.	Part No.	Description			Remark
C224	1-135-180-21	TANTALUM CHIP	3.3uF	20%	6.3V
C225	1-164-156-11	CERAMIC CHIP	0.1uF		25V
C226	1-162-974-11	CERAMIC CHIP	0.01uF		50V
C227	1-135-180-21	TANTALUM CHIP	3.3uF	20%	6.3V
C228	1-163-038-00	CERAMIC CHIP	0.1uF		25V
C229	1-135-180-21	TANTALUM CHIP	3.3uF	20%	6.3V
C230	1-162-974-11	CERAMIC CHIP	0.01uF		50V
C231	1-162-974-11	CERAMIC CHIP	0.01uF		50V
C232	1-162-638-11	CERAMIC CHIP	1uF		16V
C233	1-162-974-11	CERAMIC CHIP	0.01uF		50V
C234	1-135-157-21	TANTALUM CHIP	10uF	20%	6.3V
C235	1-128-004-11	ELECT CHIP	10uF	20%	16V
C236	1-162-950-11	CERAMIC CHIP	56PF	5%	50V
C237	1-128-004-11	ELECT CHIP	10uF	20%	16V
C238	1-162-953-11	CERAMIC CHIP	100PF	5%	50V
C239	1-162-974-11	CERAMIC CHIP	0.01uF		50V
C240	1-128-004-11	ELECT CHIP	10uF	20%	16V
C241	1-135-201-11	TANTALUM CHIP	10uF	20%	4V
C242	1-128-003-11	ELECT CHIP	22uF	20%	4V
C246	1-128-003-11	ELECT CHIP	22uF	20%	4V
C247	1-164-005-11	CERAMIC CHIP	0.47uF		25V
C248	1-128-004-11	ELECT CHIP	10uF	20%	16V
C249	1-128-004-11	ELECT CHIP	10uF	20%	16V
C250	1-128-004-11	ELECT CHIP	10uF	20%	16V
C251	1-128-004-11	ELECT CHIP	10uF	20%	16V
C252	1-164-222-11	CERAMIC CHIP	0.22uF		25V
C253	1-164-005-11	CERAMIC CHIP	0.47uF		25V
C254	1-128-004-11	ELECT CHIP	10uF	20%	16V
C255	1-128-006-11	ELECT CHIP	4.7uF	20%	25V
C256	1-126-246-11	ELECT CHIP	220uF	20%	4V
C257	1-162-974-11	CERAMIC CHIP	0.01uF		50V
C258	1-128-004-11	ELECT CHIP	10uF	20%	16V
C259	1-163-023-00	CERAMIC CHIP	0.015uF	5%	50V
C261	1-124-779-00	ELECT CHIP	10uF	20%	16v
C262	1-162-974-11	CERAMIC CHIP	0.01uF		50V
C263	1-126-207-11	ELECT CHIP	33uF	20%	4V
C264	1-162-962-11	CERAMIC CHIP	470PF	10%	50V
C265	1-126-205-11	ELECT CHIP	47uF	20%	6.3V
C266	1-162-974-11	CERAMIC CHIP	0.01uF		50V
C267	1-124-779-00	ELECT CHIP	10uF	20%	16v
C268	1-162-974-11	CERAMIC CHIP	0.01uF		50V
C269	1-128-004-11	ELECT CHIP	10uF	20%	16V
C270	1-163-129-00	CERAMIC CHIP	330PF	5%	50V
C271	1-163-131-00	CERAMIC CHIP	390PF	5%	50V
C273	1-162-974-11	CERAMIC CHIP	0.01uF		50V
C274	1-128-004-11	ELECT CHIP	10uF	20%	16V
C275	1-162-974-11	CERAMIC CHIP	0.01uF		50V
C276	1-128-004-11	ELECT CHIP	10uF	20%	16V
C277	1-162-942-11	CERAMIC CHIP	12PF	5%	50V

Ref. No.	Part No.	Description			Remark
C278	1-163-135-00	CERAMIC CHIP	560PF	5%	50V
C279	1-162-958-11	CERAMIC CHIP	270PF	5%	50V
C280	1-162-957-11	CERAMIC CHIP	220PF	5%	50V
C284	1-128-004-11	ELECT CHIP	10uF	20%	16V
C285	1-163-035-00	CERAMIC CHIP	0.047uF		50V
C286	1-162-974-11	CERAMIC CHIP	0.01uF		50V
C287	1-164-156-11	CERAMIC CHIP	0.1uF		25V
C288	1-128-292-11	ELECT	220uF	20%	10V
C289	1-162-950-11	CERAMIC CHIP	56PF	5%	50V
C301	1-162-944-11	CERAMIC CHIP	18PF	5%	50V
C302	1-162-974-11	CERAMIC CHIP	0.01uF		50V
C303	1-162-970-11	CERAMIC CHIP	0.01uF	10%	25V
C305	1-162-945-11	CERAMIC CHIP	22PF	5%	50V
C306	1-162-970-11	CERAMIC CHIP	0.01uF	10%	25V
C307	1-128-004-11	ELECT CHIP	10uF	20%	16V
C308	1-162-995-11	CERAMIC CHIP	0.022uF		50V
C309	1-135-176-21	TANTALUM CHIP	0.68uF	10%	20V
C310	1-128-013-11	ELECT CHIP	1uF	20%	50V
C311	1-128-013-11	ELECT CHIP	1uF	20%	50V
C312	1-162-969-11	CERAMIC CHIP	0.0068uF	10%	25V
C315	1-162-970-11	CERAMIC CHIP	0.01uF	10%	25V
C316	1-128-004-11	ELECT CHIP	10uF	20%	16V
C317	1-128-004-11	ELECT CHIP	10uF	20%	16V
C318	1-162-974-11	CERAMIC CHIP	0.01uF		50V
C319	1-164-217-11	CERAMIC CHIP	150PF	0.25PF	50V
C320	1-162-964-11	CERAMIC CHIP	0.001uF	10%	50V
C321	1-162-949-11	CERAMIC CHIP	47PF	5%	50V
C322	1-163-038-00	CERAMIC CHIP	0.1uF		25V
C323	1-162-952-11	CERAMIC CHIP	82PF	5%	50V
C324	1-162-967-11	CERAMIC CHIP	0.0033uF	10%	50V
C325	1-162-974-11	CERAMIC CHIP	0.01uF		50V
C326	1-162-954-11	CERAMIC CHIP	120PF	5%	50V
C327	1-162-951-11	CERAMIC CHIP	68PF	5%	50V
C328	1-162-950-11	CERAMIC CHIP	56PF	5%	50V
C329	1-162-953-11	CERAMIC CHIP	100PF	5%	50V
C330	1-162-974-11	CERAMIC CHIP	0.01uF		50V
C331	1-128-004-11	ELECT CHIP	10uF	20%	16V
C332	1-162-974-11	CERAMIC CHIP	0.01uF		50V
C333	1-162-941-11	CERAMIC CHIP	10PF	0.5PF	50V
C334	1-126-205-11	ELECT CHIP	47uF	20%	6.3V
C335	1-162-957-11	CERAMIC CHIP	220PF	5%	50V
C336	1-162-974-11	CERAMIC CHIP	0.01uF		50V
C337	1-162-974-11	CERAMIC CHIP	0.01uF		50V
C338	1-162-995-11	CERAMIC CHIP	0.022uF		50V
C339	1-162-974-11	CERAMIC CHIP	0.01uF		50V
C340	1-162-937-11	CERAMIC CHIP	6PF	0.5PF	50V
C342	1-162-949-11	CERAMIC CHIP	47PF	5%	50V
C352	1-128-013-11	ELECT CHIP	1uF	20%	50V
C353	1-162-964-11	CERAMIC CHIP	0.001uF	10%	50V

For Service Manuals Contact
MAURITRON TECHNICAL SERVICES
8 Cherry Tree Rd, Chinnor
Oxon OX9 4QY
Tel:- 01844-351694 Fax:- 01844-352554
Email:- enquiries@mauritron.co.uk

Ref. No.	Part No.	Description			Remark
C354	1-128-006-11	ELECT CHIP	4.7uF	20%	25V
C355	1-162-974-11	CERAMIC CHIP	0.01uF		50V
C357	1-128-004-11	ELECT CHIP	10uF	20%	16V
C358	1-162-974-11	CERAMIC CHIP	0.01uF		50V
C359	1-163-118-00	CERAMIC CHIP	110PF	5%	50V
C360	1-162-964-11	CERAMIC CHIP	0.001uF	10%	50V
C361	1-128-007-11	ELECT CHIP	2.2uF	20%	35V
C362	1-162-964-11	CERAMIC CHIP	0.001uF	10%	50V
C363	1-164-145-11	CERAMIC CHIP	390PF	5%	50V
C364	1-162-970-11	CERAMIC CHIP	0.01uF	10%	25V
C365	1-162-970-11	CERAMIC CHIP	0.01uF	10%	25V
C366	1-162-936-11	CERAMIC CHIP	5PF	0.25PF	50V
C367	1-162-974-11	CERAMIC CHIP	0.01uF		50V
C368	1-162-943-11	CERAMIC CHIP	15PF	5%	50V
C370	1-164-156-11	CERAMIC CHIP	0.1uF		25V
C371	1-162-921-11	CERAMIC CHIP	33PF	5%	50V
C402	1-162-971-11	CERAMIC CHIP	0.001uF		50V
C403	1-162-971-11	CERAMIC CHIP	0.001uF		50V
C404	1-162-971-11	CERAMIC CHIP	0.001uF		50V
C405	1-162-971-11	CERAMIC CHIP	0.001uF		50V
C406	1-164-489-11	CERAMIC CHIP	0.22uF	10%	16V
C407	1-128-006-11	ELECT CHIP	4.7uF	20%	25V
C408	1-126-207-11	ELECT CHIP	33uF	20%	4V
C409	1-128-006-11	ELECT CHIP	4.7uF	20%	25V
C411	1-126-205-11	ELECT CHIP	47uF	20%	6.3V
C412	1-162-970-11	CERAMIC CHIP	0.01uF	10%	25V
C414	1-126-206-11	ELECT CHIP	100uF	20%	6.3V
C416	1-163-809-11	CERAMIC CHIP	0.047uF	10%	25V
C417	1-163-989-11	CERAMIC CHIP	0.033uF	10%	25V
C418	1-164-156-11	CERAMIC CHIP	0.1uF		25V
C419	1-126-205-11	ELECT CHIP	47uF	20%	6.3V
C421	1-162-965-11	CERAMIC CHIP	0.0015uF	10%	50V
C422	1-162-638-11	CERAMIC CHIP	1uF		16V
C423	1-162-949-11	CERAMIC CHIP	47PF	5%	50V
C424	1-162-970-11	CERAMIC CHIP	0.01uF	10%	25V
C427	1-162-969-11	CERAMIC CHIP	0.0068uF	10%	25V
C429	1-128-013-11	ELECT CHIP	1uF	20%	50V
C430	1-126-607-11	ELECT CHIP	47uF	20%	4V
C431	1-126-205-11	ELECT CHIP	47uF	20%	6.3V
C432	1-128-003-11	ELECT CHIP	22uF	20%	4V
C433	1-128-003-11	ELECT CHIP	22uF	20%	4V
C434	1-128-004-11	ELECT CHIP	10uF	20%	16V
C435	1-128-013-11	ELECT CHIP	1uF	20%	50V
C436	1-128-006-11	ELECT CHIP	4.7uF	20%	25V
C437	1-162-957-11	CERAMIC CHIP	220PF	5%	50V
C438	1-128-013-11	ELECT CHIP	1uF	20%	50V
C439	1-162-638-11	CERAMIC CHIP	1uF		16V
C440	1-128-013-11	ELECT CHIP	1uF	20%	50V

Ref. No.	Part No.	Description			Remark
C441	1-162-637-11	CERAMIC CHIP	0.47uF		50V
C442	1-164-227-11	CERAMIC CHIP	0.022uF	10%	25V
C443	1-126-205-11	ELECT CHIP	47uF	20%	6.3V
C445	1-126-205-11	ELECT CHIP	47uF	20%	6.3V
C446	1-126-205-11	ELECT CHIP	47uF	20%	6.3V
C448	1-162-949-11	CERAMIC CHIP	47PF	5%	50V
C449	1-162-638-11	CERAMIC CHIP	1uF		16V
C450	1-162-971-11	CERAMIC CHIP	0.001uF		50V
C451	1-128-006-11	ELECT CHIP	4.7uF	20%	25V
C453	1-126-205-11	ELECT CHIP	47uF	20%	6.3V
C454	1-162-970-11	CERAMIC CHIP	0.01uF	10%	25V
C456	1-126-206-11	ELECT CHIP	100uF	20%	6.3V
C458	1-163-809-11	CERAMIC CHIP	0.047uF	10%	25V
C459	1-163-989-11	CERAMIC CHIP	0.033uF	10%	25V
C460	1-164-156-11	CERAMIC CHIP	0.1uF		25V
C461	1-126-205-11	ELECT CHIP	47uF	20%	6.3V
C462	1-162-638-11	CERAMIC CHIP	1uF		16V
C463	1-162-965-11	CERAMIC CHIP	0.0015uF	10%	50V
C466	1-162-970-11	CERAMIC CHIP	0.01uF	10%	25V
C468	1-162-957-11	CERAMIC CHIP	220PF	5%	50V
C469	1-162-966-11	CERAMIC CHIP	0.0022uF	10%	50V
C470	1-162-969-11	CERAMIC CHIP	0.0068uF	10%	25V
C472	1-128-013-11	ELECT CHIP	1uF	20%	50V
C473	1-126-607-11	ELECT CHIP	47uF	20%	4V
C474	1-126-205-11	ELECT CHIP	47uF	20%	6.3V
C475	1-128-003-11	ELECT CHIP	22uF	20%	4V
C476	1-128-003-11	ELECT CHIP	22uF	20%	4V
C477	1-162-966-11	CERAMIC CHIP	0.0022uF	10%	50V
C478	1-128-004-11	ELECT CHIP	10uF	20%	16V
C479	1-128-013-11	ELECT CHIP	1uF	20%	50V
C480	1-128-006-11	ELECT CHIP	4.7uF	20%	25V
C481	1-162-957-11	CERAMIC CHIP	220PF	5%	50V
C482	1-128-013-11	ELECT CHIP	1uF	20%	50V
C483	1-128-013-11	ELECT CHIP	1uF	20%	50V
C484	1-128-013-11	ELECT CHIP	1uF	20%	50V
C485	1-162-637-11	CERAMIC CHIP	0.47uF		16V
C486	1-164-489-11	CERAMIC CHIP	0.22uF	10%	16V
C487	1-163-038-00	CERAMIC CHIP	0.1uF		25V
C488	1-128-006-11	ELECT CHIP	4.7uF	20%	25V
C490	1-128-006-11	ELECT CHIP	4.7uF	20%	25V
C491	1-162-971-11	CERAMIC CHIP	0.001uF		50V
C492	1-124-778-00	ELECT CHIP	22uF	20%	6.3V
C493	1-162-638-11	CERAMIC CHIP	1uF		16V
C494	1-162-970-11	CERAMIC CHIP	0.01uF	10%	25V
C495	1-162-970-11	CERAMIC CHIP	0.01uF	10%	25V
C601	1-162-951-11	CERAMIC CHIP	68PF	5%	50V
C610	1-162-968-11	CERAMIC CHIP	0.0047uF	10%	50V
C611	1-162-968-11	CERAMIC CHIP	0.0047uF	10%	50V
C616	1-164-634-11	CERAMIC CHIP	1uF		16V

Ref. No.	Part No.	Description	Remark
C617	1-164-634-11	CERAMIC CHIP 1uF	16V
		< FILTER >	
CF301	1-577-162-11	FILTER, CERAMIC	
		< CONNECTOR >	
CN401	* 1-566-761-11	PIN, CONNECTOR (PC BOARD) 6P	
CN506	1-569-486-11	CONNECTOR, BOARD TO BOARD 16P	
CN507	1-569-485-11	CONNECTOR, BOARD TO BOARD 20P	
CN508	1-569-478-21	CONNECTOR, FPC 20P	
CN601	* 1-566-764-11	PIN, CONNECTOR (PC BOARD) 9P	
CN703	1-568-359-41	CONNECTOR, BOARD TO BOARD 20P	
CN704	1-569-363-21	CONNECTOR, FPC 15P	
CN901	1-566-524-21	CONNECTOR, FPC (ZIF) 8P	
		< DIODE >	
D101	8-719-800-76	DIODE 1SS226	
D202	8-719-941-86	DIODE DAN202U	
D203	8-719-941-86	DIODE DAN202U	
D204	8-719-404-46	DIODE MA110	
D205	8-719-941-86	DIODE DAN202U	
D207	8-719-941-86	DIODE DAN202U	
D208	8-719-941-86	DIODE DAN202U	
D209	8-719-941-86	DIODE DAN202U	
D210	8-719-404-46	DIODE MA110	
D214	8-719-940-45	DIODE MA159	
D215	8-719-404-46	DIODE MA110	
D216	8-719-404-46	DIODE MA110	
D217	8-719-800-76	DIODE 1SS226	
D219	8-719-941-86	DIODE DAN202U	
D351	8-719-404-46	DIODE MA110	
D400	8-719-941-86	DIODE DAN202U	
D401	8-719-941-86	DIODE DAN202U	
D402	8-719-404-46	DIODE MA110	
		< FILTER >	
FL201	1-236-751-21	FILTER, LOW PASS	
FL202	1-415-764-21	DELAY LINE, LC	
FL203	1-236-848-21	FILTER, LOW PASS	
FL204	1-415-818-11	DELAY LINE, LC (Y)	
FL205	1-239-055-21	FILTER, LOW PASS (CCD. PAL. Y)	
FL301	1-236-849-21	FILTER, BAND PASS	
FL302	1-236-186-11	FILTER, BAND PASS	
FL303	1-236-850-21	FILTER, BAND PASS	
		< IC >	
IC001	8-759-999-02	IC TL1596CDS8	
IC101	8-759-012-00	IC MC10H116M	

Ref. No.	Part No.	Description	Remark
IC201	8-752-036-19	IC CXA1207R	
IC202	8-752-333-24	IC CXL1506M	
IC203	8-752-036-20	IC CXA1208R	
IC204	8-759-605-61	IC CXA1203N	
IC205	8-759-710-29	IC NJM2235M	
IC206	8-759-320-76	IC HA118070FPTR	
IC207	8-759-711-71	IC NJM2234M	
IC400	8-759-823-19	IC CXA-1488R	
IC401	8-759-823-19	IC CXA-1536Q	
IC402	8-759-823-19	IC CXA-1488R	
IC403	8-759-603-27	IC M5201FP	
IC405	8-759-009-22	IC MC14094BF	
		< JACK >	
J201	1-569-556-11	JACK (AUDIO/VIDEO IN/OUT)	
		< COIL >	
L101	1-412-032-11	INDUCTOR CHIP 100uH	
L102	1-412-280-31	INDUCTOR 330uH	
L103	1-410-167-41	INDUCTOR CHIP 820uH	
L105	1-410-657-21	INDUCTOR CHIP 180uH	
L106	1-410-387-11	INDUCTOR CHIP 33uH	
L109	1-410-381-11	INDUCTOR CHIP 10uH	
L110	1-410-658-31	INDUCTOR CHIP 220uH	
L122	1-410-658-31	INDUCTOR CHIP 220uH	
L124	1-412-280-31	INDUCTOR 330uH	
L125	1-410-380-31	INDUCTOR CHIP 8.2uH	
L126	1-412-032-11	INDUCTOR CHIP 100uH	
L129	1-412-026-11	INDUCTOR CHIP 1uH	
L181	1-412-026-11	INDUCTOR CHIP 1uH	
L201	1-410-390-11	INDUCTOR CHIP 56uH	
L202	1-410-386-11	INDUCTOR CHIP 27uH	
L203	1-410-370-31	INDUCTOR CHIP 1.2uH	
L204	1-410-392-11	INDUCTOR CHIP 82uH	
L205	1-412-031-11	INDUCTOR CHIP 47uH	
L206	1-412-031-11	INDUCTOR CHIP 47uH	
L209	1-412-031-11	INDUCTOR CHIP 47uH	
L210	1-410-393-11	INDUCTOR CHIP 100uH	
L211	1-410-375-11	INDUCTOR CHIP 3.3uH	
L212	1-410-379-21	INDUCTOR CHIP 6.8uH	
L214	1-410-377-31	INDUCTOR CHIP 4.7uH	
L301	1-410-393-11	INDUCTOR CHIP 100uH	
L302	1-410-386-11	INDUCTOR CHIP 27uH	
L304	1-410-393-11	INDUCTOR CHIP 100uH	
L305	1-410-393-11	INDUCTOR CHIP 100uH	
L306	1-410-655-31	INDUCTOR CHIP 120uH	
L307	1-410-656-11	INDUCTOR CHIP 150uH	
L309	1-410-379-21	INDUCTOR CHIP 6.8uH	

For Service Manuals Contact
MAURITRON TECHNICAL SERVICES
8 Cherry Tree Rd, Chinnor
Oxon OX9 4QY
Tel:- 01844-351694 Fax:- 01844-352554
Email:- enquiries@mauritron.co.uk

Ref. No.	Part No.	Description		Remark
		< TRANSISTOR >		
Q001	8-729-905-23	TRANSISTOR	2SA1576	
Q002	8-729-905-35	TRANSISTOR	2SC4081	
Q004	8-729-905-35	TRANSISTOR	2SC4081	
Q005	8-729-905-35	TRANSISTOR	2SC4081	
Q060	8-729-905-18	TRANSISTOR	DTC144EU	
Q061	8-729-905-18	TRANSISTOR	DTC144EU	
Q062	8-729-905-18	TRANSISTOR	DTC144EU	
Q063	8-729-905-12	TRANSISTOR	DTA144EU	
Q101	8-729-905-23	TRANSISTOR	2SA1576	
Q102	8-729-905-18	TRANSISTOR	DTC144EU	
Q105	8-729-905-35	TRANSISTOR	2SC4081	
Q106	8-729-102-07	TRANSISTOR	2SC2223	
Q107	8-729-905-12	TRANSISTOR	DTA144EU	
Q109	8-729-905-35	TRANSISTOR	2SC4081	
Q115	8-729-905-35	TRANSISTOR	2SC4081	
Q116	8-729-905-18	TRANSISTOR	DTC144EU	
Q117	8-729-905-35	TRANSISTOR	2SC4081	
Q118	8-729-905-23	TRANSISTOR	2SA1576	
Q119	8-729-905-35	TRANSISTOR	2SC4081	
Q121	8-729-141-48	TRANSISTOR	2SB624T1-BV345	
Q122	8-729-102-07	TRANSISTOR	2SC2223	
Q123	8-729-905-35	TRANSISTOR	2SC4081	
Q130	8-729-905-35	TRANSISTOR	2SC4081	
Q131	8-729-905-23	TRANSISTOR	2SA1576	
Q140	8-729-905-12	TRANSISTOR	DTA144EU	
Q141	8-729-905-35	TRANSISTOR	2SC4081	
Q142	8-729-101-07	TRANSISTOR	2SB798-DLDK	
Q154	8-729-905-35	TRANSISTOR	2SC4081	
Q171	8-729-905-35	TRANSISTOR	2SC4081	
Q172	8-729-905-35	TRANSISTOR	2SC4081	
Q191	8-729-905-35	TRANSISTOR	2SC4081	
Q192	8-729-905-18	TRANSISTOR	DTC144EU	
Q195	8-729-905-12	TRANSISTOR	DTA144EU	
Q196	8-729-905-18	TRANSISTOR	DTC144EU	
Q201	8-729-905-35	TRANSISTOR	2SC4081	
Q202	8-729-905-12	TRANSISTOR	DTA144EU	
Q203	8-729-905-23	TRANSISTOR	2SA1576	
Q204	8-729-905-35	TRANSISTOR	2SC4081	
Q205	8-729-905-18	TRANSISTOR	DTC144EU	
Q206	8-729-905-35	TRANSISTOR	2SC4081	
Q209	8-729-905-18	TRANSISTOR	DTC144EU	
Q210	8-729-905-23	TRANSISTOR	2SA1576	
Q211	8-729-905-35	TRANSISTOR	2SC4081	
Q212	8-729-905-35	TRANSISTOR	2SC4081	
Q215	8-729-905-23	TRANSISTOR	2SA1576	
Q216	8-729-905-18	TRANSISTOR	DTC144EU	
Q220	8-729-141-48	TRANSISTOR	2SB624T1-BV345	
Q221	8-729-905-18	TRANSISTOR	DTC144EU	
Q222	8-729-905-12	TRANSISTOR	DTA144EU	
Q223	8-729-905-35	TRANSISTOR	2SC4081	
Q224	8-729-905-35	TRANSISTOR	2SC4081	
Q225	8-729-905-12	TRANSISTOR	DTA144EU	
Q226	8-729-905-35	TRANSISTOR	2SC4081	
Q227	8-729-905-35	TRANSISTOR	2SC4081	
Q228	8-729-905-23	TRANSISTOR	2SA1576	
Q229	8-729-905-35	TRANSISTOR	2SC4081	
Q231	8-729-905-35	TRANSISTOR	2SC4081	
Q232	8-729-905-35	TRANSISTOR	2SC4081	
Q238	8-729-905-23	TRANSISTOR	2SA1576	
Q240	8-729-905-35	TRANSISTOR	2SC4081	
Q241	8-729-905-23	TRANSISTOR	2SA1576	
Q244	8-729-905-18	TRANSISTOR	DTC144EU	
Q245	8-729-905-XX	TRANSISTOR	DTC114TU	
Q246	8-729-905-XX	TRANSISTOR	DTC114TU	
Q247	8-729-905-XX	TRANSISTOR	DTC114TU	
Q248	8-729-905-18	TRANSISTOR	DTC144EU	
Q250	8-729-905-35	TRANSISTOR	2SC4081	
Q251	8-729-905-18	TRANSISTOR	DTC144EU	
Q252	8-729-905-18	TRANSISTOR	DTC144EU	
Q254	8-729-905-35	TRANSISTOR	2SC4081	
Q301	8-729-905-23	TRANSISTOR	2SA1576	
Q303	8-729-905-35	TRANSISTOR	2SC4081	
Q304	8-729-905-35	TRANSISTOR	2SC4081	
Q306	8-729-905-35	TRANSISTOR	2SC4081	
Q307	8-729-905-18	TRANSISTOR	DTC144EU	
Q310	8-729-905-35	TRANSISTOR	2SC4081	
Q311	8-729-905-35	TRANSISTOR	2SC4081	
Q351	8-729-905-35	TRANSISTOR	2SC4081	
Q352	8-729-905-35	TRANSISTOR	2SC4081	
Q353	8-729-905-35	TRANSISTOR	2SC4081	
Q354	8-729-905-35	TRANSISTOR	2SC4081	
Q356	8-729-905-18	TRANSISTOR	DTC144EU	
Q357	8-729-905-12	TRANSISTOR	DTA144EU	
Q358	8-729-905-18	TRANSISTOR	DTC144EU	
Q359	8-729-102-08	TRANSISTOR	2SC2223-F14	
Q360	8-729-905-18	TRANSISTOR	DTC144EU	
Q362	8-729-905-18	TRANSISTOR	DTC144EU	
Q400	8-729-905-18	TRANSISTOR	DTC144EU	
Q401	8-729-905-18	TRANSISTOR	DTC144EU	
Q402	8-729-905-35	TRANSISTOR	2SC4081	
Q403	8-729-904-07	TRANSISTOR	FMG2	
Q404	8-729-904-07	TRANSISTOR	FMG2	
Q405	8-729-905-18	TRANSISTOR	DTC144EU	
Q406	8-729-905-18	TRANSISTOR	DTC144EU	
Q407	8-729-905-XX	TRANSISTOR	DTC114TU	

For Service Manuals Contact
MAURITRON TECHNICAL SERVICES
8 Cherry Tree Rd, Chinnor
Oxon OX9 4QY
Tel:- 01844-351694 Fax:- 01844-352554
Email:- enquiries@mauritron.co.uk

Ref. No.	Part No.	Description				Remark
Q408	8-729-905-XX	TRANSISTOR	DTC114TU			
Q409	8-729-216-22	TRANSISTOR	2SA1162			
Q410	8-729-907-39	TRANSISTOR	IMD2T			
Q412	8-729-402-81	TRANSISTOR	XN4501			
Q413	8-729-905-18	TRANSISTOR	DTC144EU			
Q414	8-729-904-07	TRANSISTOR	FMG2			
Q415	8-729-905-23	TRANSISTOR	2SA1576R			
		< RESISTOR >				
R001	1-216-839-11	METAL CHIP	33K	5%	1/16W	
R002	1-216-842-11	METAL CHIP	56K	5%	1/16W	
R003	1-216-817-11	METAL CHIP	470	5%	1/16W	
R004	1-216-821-11	METAL CHIP	1K	5%	1/16W	
R005	1-216-825-11	METAL CHIP	2.2K	5%	1/16W	
R006	1-216-825-11	METAL CHIP	2.2K	5%	1/16W	
R011	1-216-826-11	METAL CHIP	2.7K	5%	1/16W	
R012	1-216-825-11	METAL CHIP	2.2K	5%	1/16W	
R015	1-216-809-11	METAL CHIP	100	5%	1/16W	
R016	1-216-813-11	METAL CHIP	220	5%	1/16W	
R017	1-216-816-11	METAL CHIP	390	5%	1/16W	
R018	1-216-814-11	METAL CHIP	270	5%	1/16W	
R020	1-216-818-11	METAL CHIP	560	5%	1/16W	
R021	1-216-819-11	METAL CHIP	680	5%	1/16W	
R025	1-216-821-11	METAL CHIP	1K	5%	1/16W	
R032	1-216-864-11	METAL CHIP	0			
R035	1-216-833-11	METAL CHIP	10K	5%	1/16W	
R036	1-216-824-11	METAL CHIP	1.8K	5%	1/16W	
R037	1-216-826-11	METAL CHIP	2.7K	5%	1/16W	
R041	1-216-825-11	METAL CHIP	2.2K	5%	1/16W	
R042	1-216-824-11	METAL CHIP	1.8K	5%	1/16W	
R043	1-216-839-11	METAL CHIP	33K	5%	1/16W	
R044	1-216-837-11	METAL CHIP	22K	5%	1/16W	
R045	1-216-821-11	METAL CHIP	1K	5%	1/16W	
R047	1-216-825-11	METAL CHIP	2.2K	5%	1/16W	
R048	1-216-825-11	METAL CHIP	2.2K	5%	1/16W	
R049	1-216-821-11	METAL CHIP	1K	5%	1/16W	
R050	1-216-825-11	METAL CHIP	2.2K	5%	1/16W	
R051	1-216-833-11	METAL CHIP	10K	5%	1/16W	
R052	1-216-841-11	METAL CHIP	47K	5%	1/16W	
R053	1-216-821-11	METAL CHIP	1K	5%	1/16W	
R054	1-216-837-11	METAL CHIP	22K	5%	1/16W	
R055	1-216-826-11	METAL CHIP	2.7K	5%	1/16W	
R056	1-216-834-11	METAL CHIP	12K	5%	1/16W	
R060	1-216-864-11	METAL CHIP	0			
R061	1-216-821-11	METAL CHIP	1K	5%	1/16W	
R062	1-216-847-11	METAL CHIP	150K	5%	1/16W	
R063	1-216-847-11	METAL CHIP	150K	5%	1/16W	
R065	1-216-817-11	METAL CHIP	470	5%	1/16W	
R066	1-216-809-11	METAL CHIP	100	5%	1/16W	

Ref. No.	Part No.	Description				Remark
R071	1-216-661-11	METAL CHIP	2.7K	0.5%	1/10W	
R072	1-216-833-11	METAL CHIP	10K	5%	1/16W	
R073	1-216-833-11	METAL CHIP	10K	5%	1/16W	
R074	1-216-809-11	METAL CHIP	100	5%	1/16W	
R076	1-216-864-11	METAL CHIP	0			
R087	1-216-831-11	METAL CHIP	6.8K	5%	1/16W	
R088	1-216-821-11	METAL CHIP	1K	5%	1/16W	
R089	1-216-838-11	METAL CHIP	27K	5%	1/16W	
R090	1-216-833-11	METAL CHIP	10K	5%	1/16W	
R092	1-216-826-11	METAL CHIP	2.7K	5%	1/16W	
R093	1-216-838-11	METAL CHIP	27K	5%	1/16W	
R097	1-216-845-11	METAL CHIP	100K	5%	1/16W	
R099	1-216-833-11	METAL CHIP	10K	5%	1/16W	
R101	1-216-833-11	METAL CHIP	10K	5%	1/16W	
R102	1-216-833-11	METAL CHIP	10K	5%	1/16W	
R103	1-216-821-11	METAL CHIP	1K	5%	1/16W	
R104	1-216-811-11	METAL CHIP	150	5%	1/16W	
R108	1-216-837-11	METAL CHIP	22K	5%	1/16W	
R109	1-216-839-11	METAL CHIP	33K	5%	1/16W	
R110	1-216-825-11	METAL CHIP	2.2K	5%	1/16W	
R111	1-216-819-11	METAL CHIP	680	5%	1/16W	
R112	1-216-826-11	METAL CHIP	2.7K	5%	1/16W	
R113	1-216-814-11	METAL CHIP	270	5%	1/16W	
R114	1-216-834-11	METAL CHIP	12K	5%	1/16W	
R115	1-216-833-11	METAL CHIP	10K	5%	1/16W	
R116	1-216-817-11	METAL CHIP	470	5%	1/16W	
R117	1-216-808-11	METAL CHIP	82	5%	1/16W	
R118	1-216-832-11	METAL CHIP	8.2K	5%	1/16W	
R119	1-216-823-11	METAL CHIP	1.5K	5%	1/16W	
R120	1-216-824-11	METAL CHIP	1.8K	5%	1/16W	
R124	1-216-821-11	METAL CHIP	1K	5%	1/16W	
R125	1-216-836-11	METAL CHIP	18K	5%	1/16W	
R126	1-216-836-11	METAL CHIP	18K	5%	1/16W	
R127	1-216-821-11	METAL CHIP	1K	5%	1/16W	
R128	1-216-864-11	METAL CHIP	0			
R131	1-216-837-11	METAL CHIP	22K	5%	1/16W	
R132	1-216-837-11	METAL CHIP	22K	5%	1/16W	
R133	1-216-817-11	METAL CHIP	470	5%	1/16W	
R134	1-216-817-11	METAL CHIP	470	5%	1/16W	
R138	1-216-864-11	METAL CHIP	0			
R140	1-216-824-11	METAL CHIP	1.8K	5%	1/16W	
R141	1-216-817-11	METAL CHIP	470	5%	1/16W	
R142	1-216-817-11	METAL CHIP	470	5%	1/16W	
R143	1-216-817-11	METAL CHIP	470	5%	1/16W	
R144	1-216-821-11	METAL CHIP	1K	5%	1/16W	
R146	1-216-817-11	METAL CHIP	470	5%	1/16W	
R147	1-216-821-11	METAL CHIP	1K	5%	1/16W	
R148	1-216-821-11	METAL CHIP	1K	5%	1/16W	
R149	1-216-821-11	METAL CHIP	1K	5%	1/16W	

Ref. No.	Part No.	Description			Remark
R150	1-216-821-11	METAL CHIP	1K	5%	1/16W
R151	1-216-821-11	METAL CHIP	1K	5%	1/16W
R152	1-216-821-11	METAL CHIP	1K	5%	1/16W
R153	1-216-821-11	METAL CHIP	1K	5%	1/16W
R154	1-216-821-11	METAL CHIP	1K	5%	1/16W
R155	1-216-821-11	METAL CHIP	1K	5%	1/16W
R158	1-216-818-11	METAL CHIP	560	5%	1/16W
R159	1-216-837-11	METAL CHIP	22K	5%	1/16W
R160	1-216-837-11	METAL CHIP	22K	5%	1/16W
R161	1-216-817-11	METAL CHIP	470	5%	1/16W
R162	1-216-817-11	METAL CHIP	470	5%	1/16W
R163	1-216-805-11	METAL CHIP	47	5%	1/16W
R164	1-216-817-11	METAL CHIP	470	5%	1/16W
R165	1-216-813-11	METAL CHIP	220	5%	1/16W
R166	1-216-821-11	METAL CHIP	1K	5%	1/16W
R167	1-216-833-11	METAL CHIP	10K	5%	1/16W
R168	1-216-829-11	METAL CHIP	4.7K	5%	1/16W
R170	1-216-831-11	METAL CHIP	6.8K	5%	1/16W
R171	1-216-825-11	METAL CHIP	2.2K	5%	1/16W
R173	1-216-830-11	METAL CHIP	5.6K	5%	1/16W
R174	1-216-864-11	METAL CHIP	0		
R175	1-216-822-11	METAL CHIP	1.2K	5%	1/16W
R176	1-216-833-11	METAL CHIP	10K	5%	1/16W
R178	1-216-822-11	METAL CHIP	1.2K	5%	1/16W
R181	1-216-804-11	METAL CHIP	39	5%	1/16W
R182	1-216-804-11	METAL CHIP	39	5%	1/16W
R183	1-216-807-11	METAL CHIP	68	5%	1/16W
R184	1-216-138-00	METAL CHIP	3.3	5%	1/8W
R185	1-216-830-11	METAL CHIP	5.6K	5%	1/16W
R186	1-216-836-11	METAL CHIP	18K	5%	1/16W
R187	1-216-820-11	METAL CHIP	820	5%	1/16W
R188	1-216-833-11	METAL CHIP	10K	5%	1/16W
R191	1-216-841-11	METAL CHIP	47K	5%	1/16W
R192	1-216-841-11	METAL CHIP	47K	5%	1/16W
R193	1-216-825-11	METAL CHIP	2.2K	5%	1/16W
R196	1-216-864-11	METAL CHIP	0		
R201	1-216-822-11	METAL CHIP	1.2K	5%	1/16W
R202	1-216-841-11	METAL CHIP	47K	5%	1/16W
R203	1-216-810-11	METAL CHIP	120	5%	1/16W
R204	1-216-821-11	METAL CHIP	1K	5%	1/16W
R206	1-216-821-11	METAL CHIP	1K	5%	1/16W
R208	1-216-816-11	METAL CHIP	390	5%	1/16W
R209	1-216-819-11	METAL CHIP	680	5%	1/16W
R210	1-216-814-11	METAL CHIP	270	5%	1/16W
R211	1-216-822-11	METAL CHIP	1.2K	5%	1/16W
R212	1-216-830-11	METAL CHIP	5.6K	5%	1/16W
R213	1-216-817-11	METAL CHIP	470	5%	1/16W
R214	1-216-820-11	METAL CHIP	820	5%	1/16W
R215	1-216-817-11	METAL CHIP	470	5%	1/16W

Ref. No.	Part No.	Description			Remark
R216	1-216-817-11	METAL CHIP	470	5%	1/16W
R219	1-216-833-11	METAL CHIP	10K	5%	1/16W
R220	1-216-810-11	METAL CHIP	120	5%	1/16W
R221	1-216-844-11	METAL CHIP	82K	5%	1/16W
R222	1-216-857-11	METAL CHIP	1M	5%	1/16W
R225	1-216-839-11	METAL CHIP	33K	5%	1/16W
R226	1-216-817-11	METAL CHIP	470	5%	1/16W
R227	1-216-049-00	METAL CHIP	1K	5%	1/10W
R228	1-216-842-11	METAL CHIP	56K	5%	1/16W
R229	1-216-821-11	METAL CHIP	1K	5%	1/16W
R230	1-216-838-11	METAL CHIP	27K	5%	1/16W
R231	1-216-825-11	METAL CHIP	2.2K	5%	1/16W
R232	1-216-825-11	METAL CHIP	2.2K	5%	1/16W
R233	1-216-821-11	METAL CHIP	1K	5%	1/16W
R234	1-216-821-11	METAL CHIP	1K	5%	1/16W
R235	1-216-825-11	METAL CHIP	2.2K	5%	1/16W
R236	1-216-821-11	METAL CHIP	1K	5%	1/16W
R237	1-216-821-11	METAL CHIP	1K	5%	1/16W
R239	1-216-825-11	METAL CHIP	2.2K	5%	1/16W
R241	1-216-833-11	METAL CHIP	10K	5%	1/16W
R242	1-216-864-11	METAL CHIP	0		
R244	1-216-829-11	METAL CHIP	4.7K	5%	1/16W
R245	1-216-833-11	METAL CHIP	10K	5%	1/16W
R246	1-216-833-11	METAL CHIP	10K	5%	1/16W
R247	1-216-833-11	METAL CHIP	10K	5%	1/16W
R248	1-216-841-11	METAL CHIP	47K	5%	1/16W
R249	1-216-821-11	METAL CHIP	1K	5%	1/16W
R250	1-216-821-11	METAL CHIP	1K	5%	1/16W
R251	1-216-845-11	METAL CHIP	100K	5%	1/16W
R252	1-216-853-11	METAL CHIP	470K	5%	1/16W
R255	1-216-833-11	METAL CHIP	10K	5%	1/16W
R256	1-216-833-11	METAL CHIP	10K	5%	1/16W
R257	1-216-821-11	METAL CHIP	1K	5%	1/16W
R258	1-216-821-11	METAL CHIP	1K	5%	1/16W
R259	1-216-833-11	METAL CHIP	10K	5%	1/16W
R260	1-216-829-11	METAL CHIP	4.7K	5%	1/16W
R261	1-216-827-11	METAL CHIP	3.3K	5%	1/16W
R262	1-216-832-11	METAL CHIP	8.2K	5%	1/16W
R263	1-216-822-11	METAL CHIP	1.2K	5%	1/16W
R265	1-216-643-11	METAL CHIP	470	0.5%	1/10W
R267	1-216-827-11	METAL CHIP	3.3K	5%	1/16W
R268	1-218-708-11	METAL CHIP	4.7K	0.50%	1/16W
R269	1-218-688-11	METAL CHIP	680	0.50%	1/16W
R270	1-218-706-11	METAL CHIP	3.9K	0.50%	1/16W
R272	1-216-817-11	METAL CHIP	470	5%	1/16W
R273	1-218-708-11	METAL CHIP	4.7K	0.50%	1/16W
R274	1-218-704-11	METAL CHIP	3.3K	0.50%	1/16W
R276	1-216-820-11	METAL CHIP	820	5%	1/16W

For Service Manuals Contact
MAURITRON TECHNICAL SERVICES
8 Cherry Tree Rd, Chinnor
Oxon OX9 4QY
Tel:- 01844-351694 Fax:- 01844-352554
Email:- enquiries@mauritron.co.uk

VA-70P VA-70PB

Ref. No.	Part No.	Description			Remark
R278	1-216-820-11	METAL CHIP	820	5%	1/16W
R280	1-216-841-11	METAL CHIP	47K	5%	1/16W
R281	1-216-824-11	METAL CHIP	1.8K	5%	1/16W
R282	1-216-833-11	METAL CHIP	10K	5%	1/16W
R283	1-216-833-11	METAL CHIP	10K	5%	1/16W
R284	1-216-864-11	METAL CHIP	0		
R285	1-216-821-11	METAL CHIP	1K	5%	1/16W
R286	1-216-811-11	METAL CHIP	150	5%	1/16W
R287	1-216-813-11	METAL CHIP	220	5%	1/16W
R288	1-216-827-11	METAL CHIP	3.3K	5%	1/16W
R290	1-216-815-11	METAL CHIP	330	5%	1/16W
R291	1-216-815-11	METAL CHIP	330	5%	1/16W
R292	1-216-820-11	METAL CHIP	820	5%	1/16W
R293	1-216-864-11	METAL CHIP	0		
R294	1-216-839-11	METAL CHIP	33K	5%	1/16W
R296	1-216-821-11	METAL CHIP	1K	5%	1/16W
R297	1-216-841-11	METAL CHIP	47K	5%	1/16W
R298	1-216-831-11	METAL CHIP	6.8K	5%	1/16W
R300	1-216-864-11	METAL CHIP	0		
R301	1-216-822-11	METAL CHIP	1.2K	5%	1/16W
R302	1-216-824-11	METAL CHIP	1.8K	5%	1/16W
R303	1-216-834-11	METAL CHIP	12K	5%	1/16W
R304	1-216-838-11	METAL CHIP	27K	5%	1/16W
R305	1-216-825-11	METAL CHIP	2.2K	5%	1/16W
R308	1-216-827-11	METAL CHIP	3.3K	5%	1/16W
R309	1-216-829-11	METAL CHIP	4.7K	5%	1/16W
R310	1-216-830-11	METAL CHIP	5.6K	5%	1/16W
R311	1-216-830-11	METAL CHIP	5.6K	5%	1/16W
R312	1-216-829-11	METAL CHIP	4.7K	5%	1/16W
R314	1-216-830-11	METAL CHIP	5.6K	5%	1/16W
R315	1-216-828-11	METAL CHIP	3.9K	5%	1/16W
R316	1-216-699-11	METAL CHIP	100K	0.5%	1/10W
R318	1-216-809-11	METAL CHIP	100	5%	1/16W
R319	1-216-825-11	METAL CHIP	2.2K	5%	1/16W
R321	1-216-864-11	METAL CHIP	0		
R322	1-216-825-11	METAL CHIP	2.2K	5%	1/16W
R323	1-216-825-11	METAL CHIP	2.2K	5%	1/16W
R324	1-216-809-11	METAL CHIP	100	5%	1/16W
R325	1-216-829-11	METAL CHIP	4.7K	5%	1/16W
R326	1-216-821-11	METAL CHIP	1K	5%	1/16W
R331	1-216-864-11	METAL CHIP	0		
R332	1-216-817-11	METAL CHIP	470	5%	1/16W
R333	1-216-833-11	METAL CHIP	10K	5%	1/16W
R334	1-216-829-11	METAL CHIP	4.7K	5%	1/16W
R335	1-216-829-11	METAL CHIP	4.7K	5%	1/16W
R339	1-216-837-11	METAL CHIP	22K	5%	1/16W
R341	1-216-837-11	METAL CHIP	22K	5%	1/16W
R342	1-216-833-11	METAL CHIP	10K	5%	1/16W
R343	1-216-837-11	METAL CHIP	22K	5%	1/16W

Ref. No.	Part No.	Description			Remark
R346	1-216-815-11	METAL CHIP	330	5%	1/16W
R347	1-216-824-11	METAL CHIP	1.8K	5%	1/16W
R348	1-216-827-11	METAL CHIP	3.3K	5%	1/16W
R350	1-216-824-11	METAL CHIP	1.8K	5%	1/16W
R351	1-216-845-11	METAL CHIP	100K	5%	1/16W
R352	1-216-845-11	METAL CHIP	100K	5%	1/16W
R353	1-216-845-11	METAL CHIP	100K	5%	1/16W
R354	1-216-864-11	METAL CHIP	0		
R355	1-216-829-11	METAL CHIP	4.7K	5%	1/16W
R356	1-216-829-11	METAL CHIP	4.7K	5%	1/16W
R357	1-216-845-11	METAL CHIP	100K	5%	1/16W
R358	1-216-699-11	METAL CHIP	100K	0.5%	1/10W
R359	1-216-827-11	METAL CHIP	3.3K	5%	1/16W
R360	1-216-825-11	METAL CHIP	2.2K	5%	1/16W
R361	1-216-832-11	METAL CHIP	8.2K	5%	1/16W
R362	1-216-833-11	METAL CHIP	10K	5%	1/16W
R364	1-216-821-11	METAL CHIP	1K	5%	1/16W
R365	1-216-825-11	METAL CHIP	2.2K	5%	1/16W
R366	1-216-817-11	METAL CHIP	470	5%	1/16W
R367	1-216-833-11	METAL CHIP	10K	5%	1/16W
R368	1-216-821-11	METAL CHIP	1K	5%	1/16W
R369	1-216-839-11	METAL CHIP	33K	5%	1/16W
R370	1-216-821-11	METAL CHIP	1K	5%	1/16W
R371	1-216-821-11	METAL CHIP	1K	5%	1/16W
R372	1-216-821-11	METAL CHIP	1K	5%	1/16W
R373	1-216-825-11	METAL CHIP	2.2K	5%	1/16W
R374	1-216-825-11	METAL CHIP	2.2K	5%	1/16W
R375	1-216-839-11	METAL CHIP	33K	5%	1/16W
R376	1-216-829-11	METAL CHIP	4.7K	5%	1/16W
R389	1-216-190-00	METAL GLAZE	470	5%	1/8W
R390	1-216-839-11	METAL CHIP	33K	5%	1/16W
R391	1-216-837-11	METAL CHIP	22K	5%	1/16W
R392	1-216-837-11	METAL CHIP	22K	5%	1/16W
R393	1-216-831-11	METAL CHIP	6.8K	5%	1/16W
R394	1-216-833-11	METAL CHIP	10K	5%	1/16W
R395	1-216-833-11	METAL CHIP	10K	5%	1/16W
R396	1-216-829-11	METAL CHIP	4.7K	5%	1/16W
R397	1-216-841-11	METAL CHIP	47K	5%	1/16W
R398	1-216-823-11	METAL CHIP	1.5K	5%	1/16W
R400	1-216-864-11	METAL CHIP	0		
R401	1-216-864-11	METAL CHIP	0		
R404	1-216-845-11	METAL CHIP	100K	5%	1/16W
R405	1-216-825-11	METAL CHIP	2.2K	5%	1/16W
R407	1-216-841-11	METAL CHIP	47K	5%	1/16W
R408	1-216-833-11	METAL CHIP	10K	5%	1/16W
R409	1-216-839-11	METAL CHIP	33K	5%	1/16W
R412	1-216-833-11	METAL CHIP	10K	5%	1/16W
R413	1-216-830-11	METAL CHIP	5.6K	5%	1/16W
R415	1-216-837-11	METAL CHIP	22K	5%	1/16W

Ref. No.	Part No.	Description			Remark
R416	1-216-859-11	METAL GLAZE	1.5M	5%	1/16W
R418	1-216-830-11	METAL CHIP	5.6K	5%	1/16W
R420	1-216-832-11	METAL CHIP	8.2K	5%	1/16W
R421	1-216-864-11	METAL CHIP	0		
R423	1-216-832-11	METAL CHIP	8.2K	5%	1/16W
R425	1-216-864-11	METAL CHIP	0		
R426	1-216-817-11	METAL CHIP	470	5%	1/16W
R427	1-216-807-11	METAL CHIP	68	5%	1/16W
R428	1-216-817-11	METAL CHIP	470	5%	1/16W
R429	1-216-839-11	METAL CHIP	33K	5%	1/16W
R430	1-216-833-11	METAL CHIP	10K	5%	1/16W
R434	1-216-836-11	METAL CHIP	18K	5%	1/16W
R435	1-216-841-11	METAL CHIP	47K	5%	1/16W
R440	1-216-833-11	METAL CHIP	10K	5%	1/16W
R441	1-216-841-11	METAL CHIP	47K	5%	1/16W
R443	1-216-833-11	METAL CHIP	10K	5%	1/16W
R444	1-216-830-11	METAL CHIP	5.6K	5%	1/16W
R446	1-216-837-11	METAL CHIP	22K	5%	1/16W
R447	1-216-859-11	METAL GLAZE	1.5M	5%	1/16W
R449	1-216-830-11	METAL CHIP	5.6K	5%	1/16W
R452	1-216-825-11	METAL CHIP	2.2K	5%	1/16W
R453	1-216-832-11	METAL CHIP	8.2K	5%	1/16W
R454	1-216-832-11	METAL CHIP	8.2K	5%	1/16W
R456	1-216-817-11	METAL CHIP	470	5%	1/16W
R457	1-216-807-11	METAL CHIP	68	5%	1/16W
R458	1-216-817-11	METAL CHIP	470	5%	1/16W
R460	1-216-839-11	METAL CHIP	33K	5%	1/16W
R461	1-216-833-11	METAL CHIP	10K	5%	1/16W
R462	1-216-836-11	METAL CHIP	18K	5%	1/16W
R463	1-216-841-11	METAL CHIP	47K	5%	1/16W
R465	1-216-841-11	METAL CHIP	47K	5%	1/16W
R466	1-216-841-11	METAL CHIP	47K	5%	1/16W
R467	1-216-853-11	METAL CHIP	470K	5%	1/16W
R468	1-216-853-11	METAL CHIP	470K	5%	1/16W
R469	1-216-841-11	METAL CHIP	47K	5%	1/16W
R470	1-216-841-11	METAL CHIP	47K	5%	1/16W
R471	1-216-821-11	METAL CHIP	1K	5%	1/16W
R474	1-216-821-11	METAL CHIP	1K	5%	1/16W
R484	1-216-841-11	METAL CHIP	47K	5%	1/16W
R485	1-216-817-11	METAL CHIP	470	5%	1/16W
R486	1-216-841-11	METAL CHIP	47K	5%	1/16W
R489	1-216-841-11	METAL CHIP	47K	5%	1/16W
R490	1-216-817-11	METAL CHIP	470	5%	1/16W
R491	1-216-841-11	METAL CHIP	47K	5%	1/16W
R492	1-216-841-11	METAL CHIP	47K	5%	1/16W
R493	1-216-829-11	METAL CHIP	4.7K	5%	1/16W
R494	1-216-814-11	METAL CHIP	270	5%	1/16W
R495	1-216-825-11	METAL CHIP	2.2K	5%	1/16W
R496	1-216-825-11	METAL CHIP	2.2K	5%	1/16W
R497	1-216-827-11	METAL CHIP	3.3K	5%	1/16W
R498	1-216-837-11	METAL CHIP	22K	5%	1/16W
R499	1-216-839-11	METAL CHIP	33K	5%	1/16W
R600	1-216-835-11	METAL CHIP	15K	5%	1/16W
R601	1-216-835-11	METAL CHIP	15K	5%	1/16W
R603	1-216-833-11	METAL CHIP	10K	5%	1/16W
R604	1-216-833-11	METAL CHIP	10K	5%	1/16W
R605	1-216-841-11	METAL CHIP	47K	5%	1/16W
R608	1-216-829-11	METAL CHIP	4.7K	5%	1/16W
R621	1-216-864-11	METAL CHIP	0		
R622	1-216-864-11	METAL CHIP	0		
R630	1-216-821-11	METAL CHIP	1K	5%	1/16W
R631	1-216-821-11	METAL CHIP	1K	5%	1/16W
R636	1-216-864-11	METAL CHIP	0		
R637	1-216-841-11	METAL CHIP	47K	5%	1/16W
R638	1-216-839-11	METAL CHIP	33K	5%	1/16W
R639	1-216-839-11	METAL CHIP	33K	5%	1/16W
R640	1-216-841-11	METAL CHIP	47K	5%	1/16W
R641	1-216-817-11	METAL CHIP	470	5%	1/16W
R642	1-216-864-11	METAL CHIP	0		

< VARIABLE RESISTOR >

RV101	1-238-086-11	RES, ADJ, CERMET 470
RV201	1-238-091-11	RES, ADJ, CERMET 22K
RV202	1-238-087-11	RES, ADJ, CERMET 1K
RV203	1-238-088-11	RES, ADJ, CERMET 2.2K
RV204	1-238-087-11	RES, ADJ, CERMET 1K
RV205	1-238-091-11	RES, ADJ, CERMET 22K
RV206	1-238-088-11	RES, ADJ, CERMET 2.2K
RV207	1-238-089-11	RES, ADJ, CERMET 4.7K
RV210	1-238-088-11	RES, ADJ, CERMET 2.2K
RV211	1-238-092-11	RES, ADJ, CERMET 47K
RV301	1-238-086-11	RES, ADJ, CERMET 470
RV351	1-238-090-11	RES, ADJ, CERMET 10K
RV353	1-238-087-11	RES, ADJ, CERMET 1K
RV400	1-238-090-11	RES, ADJ, CERMET 10K
RV401	1-238-090-11	RES, ADJ, CERMET 10K
RV402	1-238-093-11	RES, ADJ, CERMET 100K
RV403	1-238-093-11	RES, ADJ, CERMET 100K
RV404	1-238-090-11	RES, ADJ, CERMET 10K
RV405	1-238-090-11	RES, ADJ, CERMET 10K
RV406	1-238-089-11	RES, ADJ, CERMET 4.7K
RV407	1-238-089-11	RES, ADJ, CERMET 4.7K

< SWITCH >

S201	1-572-275-11	SWITCH, SLIDE (IN/OUT) (AUS/E)
S400	1-570-850-11	SWITCH, SLIDE

For Service Manuals Contact
MAURITRON TECHNICAL SERVICES
8 Cherry Tree Rd, Chinnor
Oxon OX9 4QY
Tel:- 01844-351694 Fax:- 01844-352554
Email:- enquiries@mauritron.co.uk

Ref. No.	Part No.	Description			Remark
		< THERMISTOR >			
TH001	1-809-357-21	THERMISTOR			
TH700	1-800-200-00	THERMISTOR S-3K			
		< FLEXIBLE BOARD >			
W702	1-633-976-11	FP-251 FLEXIBLE BOARD			
W704	1-633-979-11	FP-299 FLEXIBLE BOARD			
		< VIBRATOR >			
X301	1-577-117-21	VIBRATOR, CRYSTAL			
**********					
*	A-7062-776-A	VC-96P BOARD, COMPLETE			
		********** (Ref. No 6,000 Series)			
	A-7068-186-A	MX-10AP BOARD, COMPLETE (HIC)			

	3-744-718-01	HOLDER (10), C			
		< CAPACITOR >			
C302	1-162-974-11	CERAMIC CHIP	0.01uF		50V
C401	1-164-634-11	CERAMIC CHIP	1uF		16V
C402	1-164-634-11	CERAMIC CHIP	1uF		16V
C403	1-164-156-11	CERAMIC CHIP	0.1uF		25V
C404	1-164-634-11	CERAMIC CHIP	1uF		16V
C406	1-164-156-11	CERAMIC CHIP	0.1uF		25V
C407	1-164-634-11	CERAMIC CHIP	1uF		16V
C408	1-162-964-11	CERAMIC CHIP	0.001uF	10%	50V
C409	1-164-156-11	CERAMIC CHIP	0.1uF		25V
C410	1-162-974-11	CERAMIC CHIP	0.01uF		50V
C411	1-124-566-11	ELECT	120uF	20%	6.3V
C412	1-162-974-11	CERAMIC CHIP	0.01uF		50V
C413	1-164-634-11	CERAMIC CHIP	1uF		16V
C414	1-162-917-11	CERAMIC CHIP	15PF	5%	50V
C415	1-163-038-00	CERAMIC CHIP	0.1uF		25V
C416	1-163-038-00	CERAMIC CHIP	0.1uF		25V
C417	1-163-038-00	CERAMIC CHIP	0.1uF		25V
C419	1-162-964-11	CERAMIC CHIP	0.001uF	10%	50V
C501	1-126-205-11	ELECT CHIP	47uF	20%	6.3V
C502	1-162-974-11	CERAMIC CHIP	0.01uF		50V
C503	1-164-634-11	CERAMIC CHIP	1uF		16V
C504	1-128-292-11	ELECT	220uF	20%	10V
C506	1-164-156-11	CERAMIC CHIP	0.1uF		25V
C507	1-162-974-11	CERAMIC CHIP	0.01uF		50V
C508	1-135-072-21	TANTALUM CHIP	0.22uF	10%	35V
C509	1-162-970-11	CERAMIC CHIP	0.01uF	10%	25V
C510	1-128-004-11	ELECT CHIP	10uF	20%	16V
C511	1-135-180-21	TANTALUM CHIP	3.3uF	20%	6.3V
C512	1-135-180-21	TANTALUM CHIP	3.3uF	20%	6.3V
C513	1-135-180-21	TANTALUM CHIP	3.3uF	20%	6.3V
C514	1-164-156-11	CERAMIC CHIP	0.1uF		25V
C521	1-162-638-11	CERAMIC CHIP	1uF		16V
C651	1-162-974-11	CERAMIC CHIP	0.01uF		50V
C653	1-162-974-11	CERAMIC CHIP	0.01uF		50V
C654	1-162-974-11	CERAMIC CHIP	0.01uF		50V
C656	1-135-091-00	TANTALUM CHIP	1uF	20%	16V
C657	1-135-091-00	TANTALUM CHIP	1uF	20%	16V
C659	1-135-180-21	TANTALUM CHIP	3.3uF	20%	6.3V
C660	1-164-156-11	CERAMIC CHIP	0.1uF		25V
C661	1-164-005-11	CERAMIC CHIP	0.47uF		25V
C662	1-162-964-11	CERAMIC CHIP	0.001uF	10%	50V
C663	1-164-156-11	CERAMIC CHIP	0.1uF		25V
C665	1-162-974-11	CERAMIC CHIP	0.01uF		50V
C666	1-162-974-11	CERAMIC CHIP	0.01uF		50V
C667	1-164-156-11	CERAMIC CHIP	0.1uF		25V
C668	1-164-156-11	CERAMIC CHIP	0.1uF		25V
C669	1-164-156-11	CERAMIC CHIP	0.1uF		25V
C750	1-162-974-11	CERAMIC CHIP	0.01uF		50V
C751	1-135-151-21	TANTALUM CHIP	4.7uF	20%	4V
		< CONNECTOR >			
CN301	1-568-338-11	CONNECTOR, BOARD TO BOARD 24P			
CN302	1-568-331-11	CONNECTOR, BOARD TO BOARD 10P			
CN304	1-565-877-11	PIN, CONNECTOR (PC BOARD) 5P			
CN305	1-566-528-21	CONNECTOR, FPC (ZIF) 12P			
CN306	1-565-528-21	PIN, CONNECTOR (PC BOARD) 3P			
CN307 *	1-565-876-11	PIN, CONNECTOR (PC BOARD) 4P			
CN308 *	1-565-541-11	PIN, CONNECTOR (PC BOARD) 2P			
CN651 *	1-566-187-11	PIN, CONNECTOR (PC BOARD) 8P			
CN652	1-565-527-11	PIN, CONNECTOR (PC BOARD) 2P			
CN653	1-565-877-11	PIN, CONNECTOR (PC BOARD) 5P			
CN654	1-565-874-11	PIN, CONNECTOR (PC BOARD) 2P			
CN655 *	1-565-529-21	PIN, CONNECTOR (PC BOARD) 4P			
		< DIODE >			
D501	8-719-404-46	DIODE MA110			
D502	8-719-404-46	DIODE MA110			
D503	8-719-404-46	DIODE MA110			
D504	8-719-404-46	DIODE MA110			
D651	8-719-976-90	DIODE DTZ4.3A			
		< FILTER >			
FL301	1-236-759-21	FILTER, LOW PASS (TRAP)			
FL302	1-415-731-21	DELAY LINE, LC (YH)			
FL303	1-415-819-11	DELAY LINE, LC			

For Service Manuals Contact
MAURITRON TECHNICAL SERVICES
8 Cherry Tree Rd, Chinnor
Oxon OX9 4QY
Tel:- 01844-351694 Fax:- 01844-352554
Email:- enquiries@mauritron.co.uk

Ref. No.	Part No.	Description	Remark
FL401	1-415-730-21	DELAY LINE, LC (100NS)	
		< IC >	
IC301	8-759-635-27	IC M62352GP	
IC401	8-752-038-XX	IC CXA1392R	
IC501	8-759-038-85	IC MC68HC11E9FU-SC400226	
IC504	8-759-635-27	IC M62352GP	
IC508	8-759-937-56	IC S-8054ALB-LM	
IC509	8-759-509-05	IC XRU4066BF	
IC510	8-759-998-96	IC LM324DR	
IC651	8-759-981-82	IC RC3414M	
IC652	8-759-998-96	IC LM324DR	
IC653	8-759-500-11	IC MM1036XFF	
IC656	8-759-998-96	IC LM324DR	
		< COIL >	
L401	1-410-391-11	INDUCTOR CHIP 68uH	
L502	1-412-058-11	INDUCTOR CHIP 10uH	
L503	1-412-062-11	INDUCTOR CHIP 47uH	
		< TRANSISTOR >	
Q301	8-729-905-23	TRANSISTOR 2SA1576	
Q302	8-729-905-23	TRANSISTOR 2SA1576	
Q303	8-729-907-47	TRANSISTOR IMZ1	
Q401	8-729-907-47	TRANSISTOR IMZ1	
Q402	8-729-907-47	TRANSISTOR IMZ1	
Q403	8-729-905-23	TRANSISTOR 2SA1576	
Q404	8-729-905-35	TRANSISTOR 2SC4081	
Q504	8-729-925-39	TRANSISTOR IMH8	
Q505	8-729-925-39	TRANSISTOR IMH8	
Q506	8-729-925-77	TRANSISTOR IMH6	
Q507	8-729-420-50	TRANSISTOR UN5215	
Q508	8-729-402-78	TRANSISTOR XN6401	
Q509	8-729-925-39	TRANSISTOR IMH8	
Q510	8-729-905-35	TRANSISTOR 2SC4081	
Q513	8-729-907-47	TRANSISTOR IMZ1	
Q516	8-729-905-35	TRANSISTOR 2SC4081	
Q652	8-729-402-42	TRANSISTOR UN5213	
Q653	8-729-905-23	TRANSISTOR 2SA1576	
Q654	8-729-106-60	TRANSISTOR 2SB1115A	
Q655	8-729-905-35	TRANSISTOR 2SC4081	
Q656	8-729-821-88	TRANSISTOR 2SK1332-3	
		< RESISTOR >	
R136	1-216-833-11	METAL CHIP 10K 5% 1/16W	
R138	1-216-836-11	METAL CHIP 18K 5% 1/16W	
R139	1-216-837-11	METAL CHIP 22K 5% 1/16W	
R140	1-216-837-11	METAL CHIP 22K 5% 1/16W	
R141	1-216-841-11	METAL CHIP 47K 5% 1/16W	
R142	1-216-837-11	METAL CHIP 22K 5% 1/16W	
R143	1-216-845-11	METAL CHIP 100K 5% 1/16W	
R148	1-216-849-11	METAL CHIP 220K 5% 1/16W	
R149	1-216-864-11	METAL CHIP 0	
R154	1-216-864-11	METAL CHIP 0	
R155	1-216-864-11	METAL CHIP 0	
R156	1-216-809-11	METAL CHIP 100 5% 1/16W	
R157	1-216-843-11	METAL CHIP 68K 5% 1/16W	
R158	1-216-862-11	METAL GLAZE 2.7M 5% 1/16W	
R159	1-216-809-11	METAL CHIP 100 5% 1/16W	
R160	1-216-833-11	METAL CHIP 10K 5% 1/16W	
R161	1-216-809-11	METAL CHIP 100 5% 1/16W	
R162	1-216-825-11	METAL CHIP 2.2K 5% 1/16W	
R163	1-216-845-11	METAL CHIP 100K 5% 1/16W	
R164	1-216-825-11	METAL CHIP 2.2K 5% 1/16W	
R165	1-216-837-11	METAL CHIP 22K 5% 1/16W	
R166	1-216-836-11	METAL CHIP 18K 5% 1/16W	
R167	1-216-822-11	METAL CHIP 1.2K 5% 1/16W	
R168	1-216-821-11	METAL CHIP 1K 5% 1/16W	
R169	1-216-864-11	METAL CHIP 0	
R171	1-216-821-11	METAL CHIP 1K 5% 1/16W	
R173	1-216-813-11	METAL CHIP 220 5% 1/16W	
R181	1-216-821-11	METAL CHIP 1K 5% 1/16W	
R182	1-216-829-11	METAL CHIP 4.7K 5% 1/16W	
R183	1-216-821-11	METAL CHIP 1K 5% 1/16W	
R184	1-216-835-11	METAL CHIP 15K 5% 1/16W	
R185	1-216-821-11	METAL CHIP 1K 5% 1/16W	
R186	1-216-821-11	METAL CHIP 1K 5% 1/16W	
R187	1-216-821-11	METAL CHIP 1K 5% 1/16W	
R188	1-216-821-11	METAL CHIP 1K 5% 1/16W	
R189	1-216-821-11	METAL CHIP 1K 5% 1/16W	
R190	1-216-821-11	METAL CHIP 1K 5% 1/16W	
R191	1-216-821-11	METAL CHIP 1K 5% 1/16W	
R192	1-216-821-11	METAL CHIP 1K 5% 1/16W	
R193	1-216-821-11	METAL CHIP 1K 5% 1/16W	
R194	1-216-821-11	METAL CHIP 1K 5% 1/16W	
R195	1-216-821-11	METAL CHIP 1K 5% 1/16W	
R196	1-216-813-11	METAL CHIP 220 5% 1/16W	
R197	1-216-821-11	METAL CHIP 1K 5% 1/16W	
R198	1-216-821-11	METAL CHIP 1K 5% 1/16W	
R199	1-216-821-11	METAL CHIP 1K 5% 1/16W	
R200	1-216-844-11	METAL CHIP 82K 5% 1/16W	
R201	1-216-671-11	METAL CHIP 6.8K 0.5% 1/10W	
R202	1-216-643-11	METAL CHIP 470 0.5% 1/10W	
R203	1-216-681-11	METAL CHIP 18K 0.5% 1/10W	
R204	1-216-671-11	METAL CHIP 6.8K 0.5% 1/10W	
R205	1-216-659-11	METAL CHIP 2.2K 0.5% 1/10W	
R206	1-216-681-11	METAL CHIP 18K 0.5% 1/10W	

Ref. No.	Part No.	Description			Remark
R302	1-216-820-11	METAL CHIP	820	5%	1/16W
R304	1-216-821-11	METAL CHIP	1K	5%	1/16W
R307	1-216-829-11	METAL CHIP	4.7K	5%	1/16W
R310	1-216-825-11	METAL CHIP	2.2K	5%	1/16W
R311	1-216-821-11	METAL CHIP	1K	5%	1/16W
R312	1-216-836-11	METAL CHIP	18K	5%	1/16W
R313	1-216-837-11	METAL CHIP	22K	5%	1/16W
R314	1-216-864-11	METAL CHIP	0		
R316	1-216-839-11	METAL CHIP	33K	5%	1/16W
R317	1-216-836-11	METAL CHIP	18K	5%	1/16W
R318	1-216-833-11	METAL CHIP	10K	5%	1/16W
R321	1-216-833-11	METAL CHIP	10K	5%	1/16W
R322	1-216-825-11	METAL CHIP	2.2K	5%	1/16W
R325	1-216-829-11	METAL CHIP	4.7K	5%	1/16W
R327	1-216-864-11	METAL CHIP	0		
R328	1-216-864-11	METAL CHIP	0		
R350	1-216-841-11	METAL CHIP	47K	5%	1/16W
R351	1-216-841-11	METAL CHIP	47K	5%	1/16W
R402	1-216-833-11	METAL CHIP	10K	5%	1/16W
R406	1-216-864-11	METAL CHIP	0		
R407	1-216-821-11	METAL CHIP	1K	5%	1/16W
R410	1-216-864-11	METAL CHIP	0		
R414	1-216-864-11	METAL CHIP	0		
R415	1-216-820-11	METAL CHIP	820	5%	1/16W
R416	1-216-817-11	METAL CHIP	470	5%	1/16W
R417	1-216-833-11	METAL CHIP	10K	5%	1/16W
R418	1-216-833-11	METAL CHIP	10K	5%	1/16W
R419	1-216-825-11	METAL CHIP	2.2K	5%	1/16W
R420	1-216-825-11	METAL CHIP	2.2K	5%	1/16W
R421	1-216-821-11	METAL CHIP	1K	5%	1/16W
R422	1-216-837-11	METAL CHIP	22K	5%	1/16W
R427	1-216-841-11	METAL CHIP	47K	5%	1/16W
R428	1-216-835-11	METAL CHIP	15K	5%	1/16W
R429	1-216-839-11	METAL CHIP	33K	5%	1/16W
R432	1-216-839-11	METAL CHIP	33K	5%	1/16W
R435	1-216-833-11	METAL CHIP	10K	5%	1/16W
R437	1-216-825-11	METAL CHIP	2.2K	5%	1/16W
R440	1-216-864-11	METAL CHIP	0		
R501	1-216-836-11	METAL CHIP	18K	5%	1/16W
R502	1-216-836-11	METAL CHIP	18K	5%	1/16W
R503	1-216-833-11	METAL CHIP	10K	5%	1/16W
R504	1-216-833-11	METAL CHIP	10K	5%	1/16W
R505	1-216-841-11	METAL CHIP	47K	5%	1/16W
R508	1-216-833-11	METAL CHIP	10K	5%	1/16W
R509	1-216-833-11	METAL CHIP	10K	5%	1/16W
R510	1-216-833-11	METAL CHIP	10K	5%	1/16W
R513	1-216-845-11	METAL CHIP	100K	5%	1/16W
R514	1-216-833-11	METAL CHIP	10K	5%	1/16W

Ref. No.	Part No.	Description			Remark
R515	1-216-857-11	METAL CHIP	1M	5%	1/16W
R517	1-216-833-11	METAL CHIP	10K	5%	1/16W
R518	1-216-833-11	METAL CHIP	10K	5%	1/16W
R521	1-216-833-11	METAL CHIP	10K	5%	1/16W
R522	1-216-833-11	METAL CHIP	10K	5%	1/16W
R523	1-216-840-11	METAL CHIP	39K	5%	1/16W
R524	1-216-833-11	METAL CHIP	10K	5%	1/16W
R525	1-216-833-11	METAL CHIP	10K	5%	1/16W
R526	1-216-847-11	METAL CHIP	150K	5%	1/16W
R527	1-216-845-11	METAL CHIP	100K	5%	1/16W
R528	1-216-833-11	METAL CHIP	10K	5%	1/16W
R529	1-216-845-11	METAL CHIP	100K	5%	1/16W
R530	1-216-845-11	METAL CHIP	100K	5%	1/16W
R531	1-216-833-11	METAL CHIP	10K	5%	1/16W
R532	1-216-833-11	METAL CHIP	10K	5%	1/16W
R533	1-216-833-11	METAL CHIP	10K	5%	1/16W
R534	1-216-837-11	METAL CHIP	22K	5%	1/16W
R535	1-216-825-11	METAL CHIP	2.2K	5%	1/16W
R536	1-216-823-11	METAL CHIP	1.5K	5%	1/16W
R537	1-216-845-11	METAL CHIP	100K	5%	1/16W
R546	1-216-829-11	METAL CHIP	4.7K	5%	1/16W
R547	1-216-829-11	METAL CHIP	4.7K	5%	1/16W
R560	1-216-833-11	METAL CHIP	10K	5%	1/16W
R561	1-216-864-11	METAL CHIP	0		
R562	1-216-833-11	METAL CHIP	10K	5%	1/16W
R653	1-216-827-11	METAL CHIP	3.3K	5%	1/16W
R654	1-216-675-11	METAL CHIP	10K	0.5%	1/10W
R655	1-216-675-11	METAL CHIP	10K	0.5%	1/10W
R656	1-216-679-11	METAL CHIP	15K	0.5%	1/10W
R657	1-216-679-11	METAL CHIP	15K	0.5%	1/10W
R658	1-216-845-11	METAL CHIP	100K	5%	1/16W
R666	1-216-819-11	METAL CHIP	680	5%	1/16W
R667	1-216-821-11	METAL CHIP	1K	5%	1/16W
R672	1-216-821-11	METAL CHIP	1K	5%	1/16W
R678	1-216-789-11	METAL CHIP	2.2	5%	1/16W
R680	1-216-821-11	METAL CHIP	1K	5%	1/16W
R681	1-216-820-11	METAL CHIP	820	5%	1/16W
R682	1-216-833-11	METAL CHIP	10K	5%	1/16W
R683	1-216-857-11	METAL CHIP	1M	5%	1/16W
R684	1-216-823-11	METAL CHIP	1.5K	5%	1/16W
R685	1-216-848-11	METAL CHIP	180K	5%	1/16W
R686	1-216-824-11	METAL CHIP	1.8K	5%	1/16W
R687	1-216-833-11	METAL CHIP	10K	5%	1/16W
R688	1-216-841-11	METAL CHIP	47K	5%	1/16W
R689	1-216-843-11	METAL CHIP	68K	5%	1/16W
R690	1-216-839-11	METAL CHIP	33K	5%	1/16W
R691	1-216-864-11	METAL CHIP	0		
R693	1-216-831-11	METAL CHIP	6.8K	5%	1/16W
R694	1-216-848-11	METAL CHIP	180K	5%	1/16W

For Service Manuals Contact
MAURITRON TECHNICAL SERVICES
8 Cherry Tree Rd, Chinnor
Oxon OX9 4QY
Tel:- 01844-351694 Fax:- 01844-352554
Email:- enquiries@mauritron.co.uk

Ref.No.	Part No.	Description			Remark
R698	1-216-837-11	METAL CHIP	22K	5% 1/16W	
R699	1-216-827-11	METAL CHIP	3.3K	5% 1/16W	
R700	1-216-855-11	METAL CHIP	680K	5% 1/16W	
R701	1-216-837-11	METAL CHIP	22K	5% 1/16W	
R702	1-216-864-11	METAL CHIP	0		
R703	1-216-864-11	METAL CHIP	0		
R750	1-216-695-11	METAL CHIP	68K	0.5% 1/10W	
R751	1-216-833-11	METAL CHIP	10K	5% 1/16W	
R752	1-216-105-00	METAL CHIP	220K	5% 1/10W	
R753	1-216-687-11	METAL CHIP	33K	0.5% 1/10W	
R754	1-216-789-11	METAL CHIP	2.2	5% 1/16W	
R755	1-216-826-11	METAL CHIP	2.7K	5% 1/16W	
R800	1-216-825-11	METAL CHIP	2.2K	5% 1/16W	
R801	1-216-825-11	METAL CHIP	2.2K	5% 1/16W	
R802	1-216-825-11	METAL CHIP	2.2K	5% 1/16W	
R803	1-216-825-11	METAL CHIP	2.2K	5% 1/16W	
R804	1-216-825-11	METAL CHIP	2.2K	5% 1/16W	
R805	1-216-825-11	METAL CHIP	2.2K	5% 1/16W	
R806	1-216-825-11	METAL CHIP	2.2K	5% 1/16W	
R807	1-216-825-11	METAL CHIP	2.2K	5% 1/16W	
R809	1-216-821-11	METAL CHIP	1K	5% 1/16W	
R810	1-216-821-11	METAL CHIP	1K	5% 1/16W	
		< VIBRATOR >			
X501	1-578-689-21	VIBRATOR			

****

* A-7062-278-A VF-26P BOARD, COMPLETE (TYPE 1)

****

(Ref.No 7,000 Series)

		< CAPACITOR >			
C901	1-126-369-11	ELECT	220uF	20%	6.3V
C902	1-163-038-00	CERAMIC CHIP	0.1uF		25V
C904	1-127-515-11	ELECT(SOLID)	47uF	20%	6.3V
C905	1-163-009-11	CERAMIC CHIP	0.001uF	10%	50V
C906	1-163-115-00	CERAMIC CHIP	82PF	5%	50V
C907	⚠ 1-162-625-11	CERAMIC CHIP	0.0047uF	5%	50V
C908	1-164-182-11	CERAMIC CHIP	0.0033uF	10%	50V
C909	1-126-193-11	ELECT	1uF	20%	50V
C911	1-131-388-00	TANTALUM	68uF	10%	6.3V
C912	1-102-038-00	CERAMIC	0.001uF		
C913	1-163-033-00	CERAMIC CHIP	0.022uF		50V
C915	1-126-193-11	ELECT	1uF	20%	50V
C916	1-163-037-11	CERAMIC CHIP	0.022uF	10%	25V
C917	1-135-166-21	TANTALUM CHIP	47uF	10%	10V
C918	1-162-638-11	CERAMIC CHIP	1uF		16V
C919	1-135-070-00	TANTALUM CHIP	0.1uF	10%	35V
C920	1-164-232-11	CERAMIC CHIP	0.01uF		50V
		< CONNECTOR >			
CN901	* 1-566-195-11	PIN, CONNECTOR (PC BOARD) 2P			
CN902	* 1-566-195-11	PIN, CONNECTOR (PC BOARD) 2P			
CN904	1-575-570-21	CONNECTOR, FPC/FFC 6P			
		< CONPOSITION CIRCUIT BLOCK >			
CP901	1-238-119-11	RES, ADJ			
		< SOCKET >			
CRT901	1-526-978-21	SOCKET ASSY, CRT			
		< DIODE >			
D670	8-719-404-46	DIODE MA110			
D903	8-719-400-20	DIODE MA152WA			
D955	8-719-404-19	DIODE LN1251C			
		< IC >			
IC901	8-759-420-01	IC AN2512S			
		< COIL >			
L901	1-410-645-31	INDUCTOR 100uH			
L902	1-410-385-11	INDUCTOR CHIP 22uH			
L903	⚠ 1-459-858-11	COIL, FERRITE (HLC)			
		< TRANSISTOR >			
Q903	8-729-106-68	TRANSISTOR 2SD1615A			
Q904	8-729-216-31	TRANSISTOR 2SA1163G			
		< RESISTOR >			
R902	1-216-051-00	METAL CHIP	1.2K	5% 1/10W	
R903	⚠ 1-216-041-00	METAL CHIP	470	5% 1/10W	
R907	1-216-063-00	METAL CHIP	3.9K	5% 1/10W	
R908	1-216-063-00	METAL CHIP	3.9K	5% 1/10W	
R909	1-216-061-00	METAL CHIP	3.3K	5% 1/10W	
R911	1-216-079-00	METAL CHIP	18K	5% 1/10W	
R914	1-216-133-00	METAL CHIP	3.3M	5% 1/10W	
R915	1-216-133-00	METAL CHIP	3.3M	5% 1/10W	
R916	1-216-125-00	METAL CHIP	1.5M	5% 1/10W	
R917	1-216-121-00	METAL CHIP	1M	5% 1/10W	
R919	1-216-097-00	METAL CHIP	100K	5% 1/10W	
R920	1-216-113-00	METAL CHIP	470K	5% 1/10W	
R921	1-216-013-00	METAL CHIP	33	5% 1/10W	
R922	1-216-055-00	METAL CHIP	1.8K	5% 1/10W	
R923	1-216-025-00	METAL CHIP	100	5% 1/10W	
R924	1-216-306-11	METAL CHIP	3.9	5% 1/10W	

For Service Manuals Contact
MAURITRON TECHNICAL SERVICES
8 Cherry Tree Rd, Chinnor
Oxon OX9 4QY
Tel:- 01844-351694 Fax:- 01844-352554
Email:- enquiries@mauritron.co.uk

The components identified by mark ⚠ or dotted line with mark ⚠ are critical for safety.
Replace only with part number specified.

Ref. No.	Part No.	Description			Remark
R925	1-216-336-11	METAL CHIP	47K	1%	1/10W
R926	1-216-107-00	METAL CHIP	270K	5%	1/10W
R928	1-216-870-11	METAL CHIP	180K	1%	1/10W
R929	⚠ 1-216-053-00	METAL CHIP	1.5K	5%	1/10W
R930	1-216-089-00	METAL CHIP	47K	5%	1/10W
R931	1-216-121-00	METAL CHIP	1M	5%	1/10W
R950	1-216-041-00	METAL CHIP	470	5%	1/10W
R951	1-216-295-00	METAL CHIP	0	5%	1/10W
		< VARIABLE RESISTOR >			
RV901	1-238-647-11	RES, ADJ, METAL GLAZE 4.7M			
		< TRANSFORMER >			
T901	⚠ 1-439-428-11	TRANSFORMER ASSY, FLYBACK			
		< THERMISTOR >			
TH901	1-807-938-11	THERMISTOR			

****

* A-7062-278-A VF-27P BOARD, COMPLETE

****

(Ref. No 9,000 Series)

		< CAPACITOR >			
C901	1-124-442-00	ELECT	330uF	20%	6.3V
C903	1-163-077-00	CERAMIC CHIP	0.1uF	10%	25V
C904	1-126-160-11	ELECT	1uF	20%	50V
C905	1-163-037-11	CERAMIC CHIP	0.022uF	10%	25V
C906	1-131-381-00	TANTALUM	47uF	10%	10V
C907	1-162-638-11	CERAMIC CHIP	1uF		16V
C908	1-136-165-00	FILM	0.1uF	5%	50V
C909	1-163-109-00	CERAMIC CHIP	47PF	5%	50V
C910	1-124-587-11	ELECT	220uF	20%	6.3V
C911	1-163-141-00	CERAMIC CHIP	0.001uF	5%	50V
C912	⚠ 1-162-625-11	CERAMIC CHIP	0.0047uF	5%	50V
C913	⚠ 1-162-625-11	CERAMIC CHIP	0.0047uF	5%	50V
C914	⚠ 1-163-209-00	CERAMIC CHIP	0.0015uF	5%	50V
C915	1-126-090-11	ELECT	82uF	20%	10V
C916	1-126-163-11	ELECT	4.7uF	20%	50V
C918	1-163-037-11	CERAMIC CHIP	0.022uF	10%	25V
C919	1-102-038-00	CERAMIC	0.001uF		
		< CONNECTOR >			
CN902	* 1-566-195-11	PIN, CONNECTOR (PC BOARD) 2P			
CN903	* 1-566-195-11	PIN, CONNECTOR (PC BOARD) 2P			
CN904	1-575-570-21	CONNECTOR, FPC/FFC 6P			

Ref. No.	Part No.	Description			Remark
		< DIODE >			
D903	8-719-400-20	DIODE MA152WA			
D955	8-719-404-19	DIODE LN1251C			
		< IC >			
IC901	8-759-420-01	IC AN2512S			
		< COIL >			
L901	1-410-831-21	INDUCTOR 82uH			
L902	1-408-977-21	INDUCTOR 39uH			
L903	⚠ 1-459-858-11	COIL, FERRITE (HLC)			
		< TRANSISTOR >			
Q903	8-729-216-31	TRANSISTOR 2SA1163G			
Q904	8-729-100-66	TRANSISTOR 2SC1623			
Q905	8-729-106-68	TRANSISTOR 2SD1615A			
		< RESISTOR >			
R903	1-216-041-00	METAL CHIP	470	5%	1/10W
R905	1-216-007-00	METAL CHIP	18	5%	1/10W
R906	⚠ 1-216-121-00	METAL CHIP	1M	5%	1/10W
R908	1-216-097-00	METAL CHIP	100K	5%	1/10W
R909	1-216-113-00	METAL CHIP	470K	5%	1/10W
R910	1-216-053-00	METAL CHIP	1.5K	5%	1/10W
R911	1-216-013-00	METAL CHIP	33	5%	1/10W
R912	1-216-691-11	METAL CHIP	47K	0.5%	1/10W
R913	1-216-107-00	METAL CHIP	270K	5%	1/10W
R914	1-216-025-00	METAL CHIP	100	5%	1/10W
R915	1-216-306-11	METAL CHIP	3.9	5%	1/10W
R917	1-216-045-00	METAL CHIP	680	5%	1/10W
R918	1-216-069-00	METAL CHIP	6.8K	5%	1/10W
R919	1-216-748-11	METAL CHIP	39K	5%	1/10W
R920	1-216-748-11	METAL CHIP	39K	5%	1/10W
R921	1-216-295-00	METAL CHIP	0	5%	1/10W
R922	1-216-101-00	METAL CHIP	150K	5%	1/10W
R923	1-216-121-00	METAL CHIP	1M	5%	1/10W
R924	1-216-131-11	METAL CHIP	2.7M	5%	1/10W
R925	1-216-131-11	METAL CHIP	2.7M	5%	1/10W
R926	1-216-055-00	METAL CHIP	1.8K	5%	1/10W
R928	⚠ 1-216-051-00	METAL CHIP	1.2K	5%	1/10W
R933	1-216-121-00	METAL CHIP	1M	5%	1/10W
R950	1-216-041-00	METAL CHIP	470	5%	1/10W
		< VARIABLE RESISTOR >			
RV901	1-230-873-11	RES, ADJ, METAL47K			
RV902	1-230-866-11	RES, ADJ, METAL470			
RV903	1-230-869-11	RES, ADJ, METAL4.7K			
RV904	1-228-762-00	RES, ADJ, METAL GLAZE 1M			

For Service Manuals Contact
MAURITRON TECHNICAL SERVICES
8 Cherry Tree Rd, Chinnor
Oxon OX9 4QY
Tel:- 01844-351694 Fax:- 01844-352554
Email:- enquiries@mauritron.co.uk

The components identified by mark ⚠ or dotted line with mark ⚠ are critical for safety.
Replace only with part number specified.

Ref. No.	Part No.	Description			Remark
		< TRANSFORMER >			
T901	⚠ 1-439-431-11	TRANSFORMER ASSY, FLYBACK			
**********					
	* A-7062-278-A	VF-26P BOARD, COMPLETE (TYPE 2)			
		**********			
		(Ref. No 8,000 Series)			
		< CAPACITOR >			
C901	1-126-369-11	ELECT	220uF	20%	6.3V
C902	1-163-038-00	CERAMIC CHIP	0.1uF		25V
C904	1-127-515-11	ELECT (SOLID)	47uF	20%	6.3V
C905	1-163-009-11	CERAMIC CHIP	0.001uF	10%	50V
C906	1-163-115-00	CERAMIC CHIP	82PF	5%	50V
C907	⚠ 1-162-625-11	CERAMIC CHIP	0.0047uF	5%	50V
C908	1-164-182-11	CERAMIC CHIP	0.0033uF	10%	50V
C909	1-126-193-11	ELECT	1uF	20%	50V
C911	1-131-388-00	TANTALUM	68uF	10%	6.3V
C912	1-102-038-00	CERAMIC	0.001uF		
C913	1-163-033-00	CERAMIC CHIP	0.022uF		50V
C915	1-126-193-11	ELECT	1uF	20%	50V
C916	1-163-145-00	CERAMIC CHIP	0.0015uF	5%	50V
C917	1-135-162-21	TANTALUM CHIP	33uF	20%	6.3V
C918	1-162-638-11	CERAMIC CHIP	1uF		16V
C919	1-135-070-00	TANTALUM CHIP	0.1uF	10%	35V
C920	1-164-232-11	CERAMIC CHIP	0.01uF		50V
		< CONNECTOR >			
CN901	* 1-566-195-11	PIN, CONNECTOR (PC BOARD) 2P			
CN902	* 1-566-195-11	PIN, CONNECTOR (PC BOARD) 2P			
CN904	1-575-570-21	CONNECTOR, FPC/FFC 6P			
		< CONPOSITION CIRCUIT BLOCK >			
CP901	1-238-119-11	RES, ADJ			
		< SOCKET >			
CRT901	1-526-978-21	SOCKET ASSY, CRT			
		< DIODE >			
D670	8-719-404-46	DIODE MA110			
D903	8-719-400-20	DIODE MA152WA			
D955	8-719-404-19	DIODE LN1251C			
		< IC >			
IC901	8-759-511-01	IC BA7147F			
IC901	8-759-514-91	IC XRA7147F			

Ref. No.	Part No.	Description			Remark
		< COIL >			
L901	1-410-645-31	INDUCTOR	100uH		
L902	1-410-385-11	INDUCTOR CHIP	22uH		
L903	⚠ 1-459-858-11	COIL, FERRITE (HLC)			
		< TRANSISTOR >			
Q903	8-729-106-68	TRANSISTOR	2SD1615A		
Q903	8-729-420-81	TRANSISTOR	2SD874A		
Q903	8-729-420-84	TRANSISTOR	2SD874A		
Q904	8-729-216-31	TRANSISTOR	2SA1163G		
Q904	8-729-216-32	TRANSISTOR	2SA1163L		
		< RESISTOR >			
R903	⚠ 1-216-041-00	METAL CHIP	470	5%	1/10W
R907	1-216-063-00	METAL CHIP	3.9K	5%	1/10W
R908	1-216-063-00	METAL CHIP	3.9K	5%	1/10W
R909	1-216-061-00	METAL CHIP	3.3K	5%	1/10W
R911	1-216-079-00	METAL CHIP	18K	5%	1/10W
R914	1-216-133-00	METAL CHIP	3.3M	5%	1/10W
R915	1-216-133-00	METAL CHIP	3.3M	5%	1/10W
R916	1-216-125-00	METAL CHIP	1.5M	5%	1/10W
R917	1-216-121-00	METAL CHIP	1M	5%	1/10W
R919	1-216-097-00	METAL CHIP	100K	5%	1/10W
R920	1-216-111-00	METAL CHIP	390K	5%	1/10W
R921	1-216-011-00	METAL CHIP	27	5%	1/10W
R922	1-216-055-00	METAL CHIP	1.8K	5%	1/10W
R923	1-216-025-00	METAL CHIP	100	5%	1/10W
R924	1-216-306-11	METAL CHIP	3.9	5%	1/10W
R925	1-216-334-11	METAL GLAZE	22K	1%	1/10W
R926	1-218-165-11	METAL GLAZE	220K	1%	1/10W
R928	1-216-870-11	METAL CHIP	180K	1%	1/10W
R929	⚠ 1-216-073-00	METAL CHIP	10K	5%	1/10W
R930	1-216-089-00	METAL CHIP	47K	5%	1/10W
R950	1-216-041-00	METAL CHIP	470	5%	1/10W
R951	1-216-295-00	METAL CHIP	0	5%	1/10W
		< VARIABLE RESISTOR >			
RV901	1-238-647-11	RES, ADJ, METAL GLAZE 4.7M			
**********					

For Service Manuals Contact
MAURITRON TECHNICAL SERVICES
8 Cherry Tree Rd, Chinnor
Oxon OX9 4QY
Tel:- 01844-351694 Fax:- 01844-352554
Email:- enquiries@mauritron.co.uk

The components identified by mark ⚠ or dotted line with mark ⚠ are critical for safety.
Replace only with part number specified.

VK-16P VK-16PB

Ref. No.	Part No.	Description	Remark
	* A-7071-424-A	VK-16P BOARD, COMPLETE (AEP/UK)	
		**********	
	* A-7071-454-A	VK-16PB BOARD, COMPLETE (AUS/E)	
		**********	
		(Ref. No 4,000 Series)	
		< CAPACITOR >	
C501	1-163-109-00	CERAMIC CHIP 47PF 5% 50V	
		< CONNECTOR >	
CN501	1-566-530-11	CONNECTOR, FPC (ZIF) 14P	
		< DIODE >	
D508	8-719-404-46	DIODE MA110	
D509	8-719-404-46	DIODE MA110	
D513	8-719-404-46	DIODE MA110	
D523	8-719-161-02	DIODE RD8.210SB	
D524	8-719-161-02	DIODE RD8.210SB	
D526	8-719-161-02	DIODE RD8.210SB	
D527	8-719-161-02	DIODE RD8.210SB	
D529	8-719-404-46	DIODE MA110	
		< IC >	
IC960	8-749-921-76	IC GP1U56 (ON FP-413 FLEXIBLE)	
		< RESISTOR >	
R501	1-216-029-00	METAL CHIP 150 5% 1/10W	
		< SWITCH >	
S500	1-571-684-11	SWITCH, TACTIL (REW ◀◀)	
S503	1-571-684-11	SWITCH, TACTIL (FF ▶▶)	
S504	1-571-684-11	SWITCH, TACTIL (STOP □)	
S505	1-571-684-11	SWITCH, TACTIL (PAUSE ▮▮)	
S506	1-571-684-11	SWITCH, TACTIL (TIME/NEXT)	
S507	1-571-684-11	SWITCH, TACTIL (DATA (+))	
S508	1-571-684-11	SWITCH, TACTIL (DATA SCREEN)	
S509	1-571-684-11	SWITCH, TACTIL (AGE)	
S510	1-572-284-11	SWITCH, SLIDE (REC ●—▶) (AUS/E)	
S511	1-570-870-11	SWITCH, SLIDE (SP/LP)	
S512	1-571-684-11	SWITCH, TACTIL (FRAME >/II▶)	
S513	1-571-684-11	SWITCH, TACTIL (SLOW ▮▶)	
S514	1-572-283-11	SWITCH, SLIDE (CAM/OFF/PLAYER)	
S515	1-570-870-11	SWITCH, SLIDE (BEEP ON/OFF)	
S520	1-571-684-11	SWITCH, TACTIL (PB ▷)	
		< FLEXIBLE BOARD >	
W550	1-639-045-11	FP-413 FLEXIBLE BOARD	
W551	1-633-981-11	FP-292 FLEXIBLE BOARD	

****

Ref. No.	Part No.	Description	Remark
		MISCELLANEOUS	
		**********	
54	* 8-814-268-00	MICROPHONE C-2033 SET (STEREO)	
163	1-808-505-12	SENSOR (DEW SENSOR)	
318	8-741-509-11	IC SBX1509-11 (RP-77 HIC BOARD)	
322	1-569-347-11	CONNECTOR, FPC (TRANSLATION) 13P	
351	1-547-481-11	LENS, ZOOM (VCL-8510XA)	
356	⚠ 1-466-230-21	CONVERTER UNIT, D/D	
364	1-547-381-12	FILTER BLOCK, OPTICAL (ON CCD IMAGER)	
365	8-752-604-72	IC ICX039AN-2 (CCD IMAGER)	
			(ON CD-60P BOARD)
BZ901	1-529-096-11	BUZZER, PIEZOELECTRIC	
CRT901	⚠ 1-526-978-21	SOCKET ASSY, CRT (ON VF-26P BOARD)	
			(B TYPE (M))
L901	⚠ 1-451-310-21	DEFLECTION YOKE (B/W) (ON VF-26P BOARD)	
			(B TYPE (M))
M901	A-7048-404-A	DRUM ASSY (DGU-63A-R)	
M902	8-835-331-01	MOTOR, DC U-22A (CAPSTAN)	
M903	A-7040-208-A	MOTOR ASSY, THREADING (LOADING)	
ND901	1-809-023-11	DISPLAY PANEL, LIQUID CRYSTAL (LCD ASSY)	
S901	1-572-692-11	SWITCH, PUSH (ZOOM SWITCH UNIT)	
V901	⚠ 1-452-482-11	CRT ASSY (M91JYZ60WB) (ON VF-27P BOARD)	
			(A TYPE (C))
V901	⚠ 1-546-085-11	CATHODE-RAY TUBE, B/W (ON VF-26P BOARD)	
			(B TYPE (M))
W901	⚠ 1-540-019-21	SOCKET ASSY, CRT (ON VF-27P BOARD)	
			(A TYPE (C))

****

ACCESSORY & PACKING MATERIAL

****

	A-6767-706-A	RFU ADAPTOR (RFU-89EA) (E)
	A-6767-707-A	RFU ADAPTOR (RFU-89EA) (UK)
	A-6768-254-A	RFU ADAPTOR (RFU-90E) (AEP)
	A-6768-255-A	RFU ADAPTOR (RFU-90AS) (Australian)
	1-465-395-41	COMMANDER, REMOTE (RMT-502) (E/Australian)
	1-465-395-81	COMMANDER, REMOTE (RMT-502) (AEP/UK)
	1-571-164-11	SWITCH, ANTENNA CHANGE (CABLE) (UK/E)
	1-573-291-11	ADAPTOR, CONVERSION (AEP/UK)
	1-575-334-11	CORD, CONNECTION
*	3-340-514-01	BAG, PROTECTION
	3-701-625-00	BAG, POLYETHYLENE
	3-712-673-01	SCREWDRIVER (UK/E)
*	3-741-532-01	CUSHION, ACC
	3-753-141-11	MANUAL, INSTRUCTION (ENGLISH) (AEP/UK)
	3-753-141-41	MANUAL, INSTRUCTION (FRENCH/GERMAN/SPANISH) (AEP)
	3-753-141-51	MANUAL, INSTRUCTION (DUTCH/SWEDISH/ITALIAN) (AEP)

For Service Manuals Contact
MAURITRON TECHNICAL SERVICES
8 Cherry Tree Rd, Chinnor
Oxon OX9 4QY
Tel:- 01844-351694 Fax:- 01844-352554
Email:- enquiries@mauritron.co.uk

The components identified by mark ⚠ or dotted line with mark ⚠ are critical for safety.
Replace only with part number specified.

Ref. No.	Part No.	Description	Remark
	3-753-141-61	MANUAL, INSTRUCTION (PORTUGUESE) (AEP)	
	3-753-141-71	MANUAL, INSTRUCTION (FINNISH/DANISH) (AEP)	
	3-753-484-11	MANUAL, INSTRUCTION (ENGLISH) (E/Australian)	
	3-753-484-41	MANUAL, INSTRUCTION (FRENCH/GERMAN/SPANISH) (E)	
	3-753-484-51	MANUAL, INSTRUCTION (ARABIC) (E)	
	3-753-484-61	MANUAL, INSTRUCTION (CHINESE) (E)	
*	3-764-631-12	INSTRUCTION, DEW CONDENSATION (AEP/E)	
	3-941-737-01	BELT, SHOULDER	
*	3-942-284-41	INDIVIDUAL CARTON	
*	3-942-304-01	CUSHION (UPPER)	
*	3-942-305-01	CUSHION (LOWER)	
**	AC-V65A	AC POWER ADAPTOR	
***	NP-66	BATTERY PACK	

Note

** MARK PARTS IS AVAILABLE FOR REPAIR SERVICE.
*** MARK PARTS IS AVAILABLE AS AN OPTIONAL ACCESSORT.

****

HARDWARE LIST
****

# 1	7-671-155-01	STEEL BALL 3.0
# 2	7-627-553-37	SCREW, PRECISION +P 2X3 TYPE3
# 3	7-627-553-68	SCREW, PRECISION +P 2X6 TYPE3
# 4	7-627-555-88	SCREW (M1.4X1.8)
# 5	7-621-281-15	SCREW +P 2X2
# 6	7-627-553-37	SCREW (M2X3), SPECIAL HEAD

****

For Service Manuals Contact
MAURITRON TECHNICAL SERVICES
8 Cherry Tree Rd, Chinnor
Oxon OX9 4QY
Tel:- 01844-351694 Fax:- 01844-352554
Email:- enquiries@mauritron.co.uk

SECTION 7
SERVICE MODE

☆ This unit adopts the camera adjustment and the EVR (Electronic Variable resistor) with the SENSER LANC system.

7-1. SENSER LANC

SENSER LANC is the LANC format to adjust the EVR (Electronic Variable resistor) of Video 8 Handycam and to perform tests by using the LANC (control L). This word stands for the same as the SERVICE LANC formerly used, however, the unified word "SENSER LANC" will be used with this substantial functions.

7-1-1. How to Use RM-95 Jig (Adjustment remote controller)

RM-95 jig is used to operate the SENSER LANC. HOLD switch of this jig is remodelled for service to get the SENSER LANC mode. Replacing microcomputer in RM-95 is required for the old-model RM-95 jig, which has no page display function.

Old model	μPD7503G-A71-12 μPD7503G-C23-12	8-759-142-56 8-759-146-77	Page is not displayed (Replacing microcomputer is required)
New model	μPD7503G-C56-12	8-759-148-35	Page is displayed

LCD display of RM-95

⇨ Example

This means that the page 1 and address 3D is data of 37.

- Reference between Data and Bit

When the data is 37 ⇨

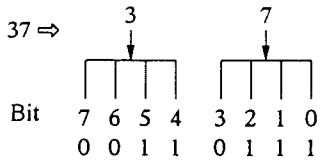

Page	Address	Bit 7	Bit 6	Bit 5	Bit 4	Bit 3	Bit 2	Bit 1	Bit 0
1	3D	MP-HG		ME/MP	REC PROOF	V MUTE	A MUTE	JOG	VA PB MODE
		0	0	1	1	0	1	1	1

The data in the above list means as follows:
ME/MP SW ····· ON
REC PROOF SW ····· ON
AUDIO MUTE ····· ON
JOG ····· ON
VA PB MODE ····· ON

For Service Manuals Contact
MAURITRON TECHNICAL SERVICES
8 Cherry Tree Rd, Chinnor
Oxon OX9 4QY
Tel:- 01844-351694 Fax:- 01844-352554
Email:- enquiries@mauritron.co.uk

7-1-2. Transfer method of the service mode with RM-95

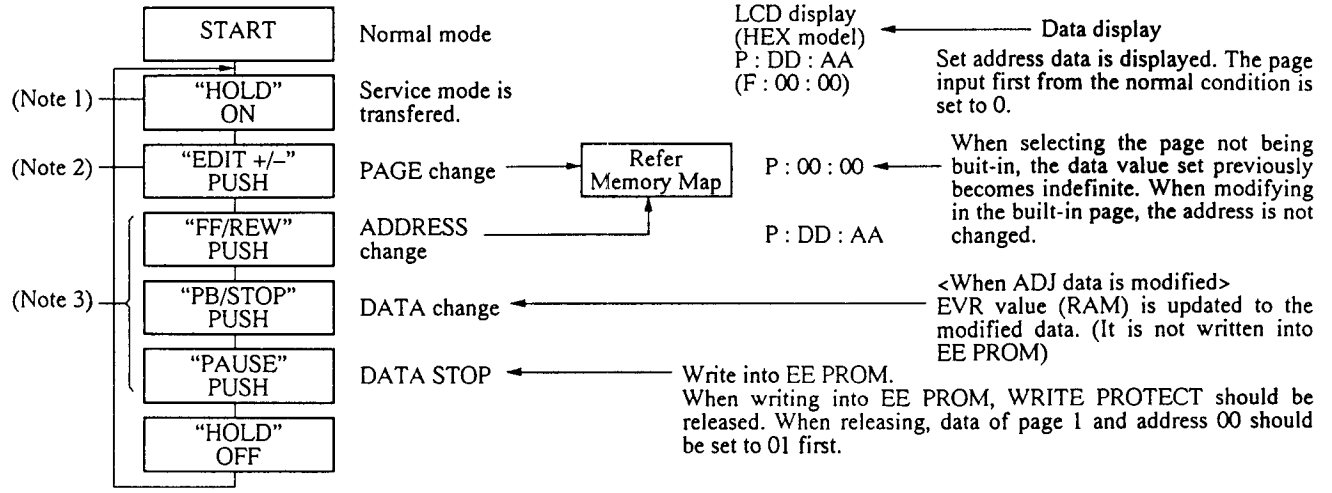

Command name	Command function	Function Button with RM-95
Page Up	Page +1	Edit Search +
Page Down	Page –1	Edit Search –
Direct Page Set	Set to direct page	Event Clear
Address Up	Address +1	Fast Forward
Address Down	Address –1	Rewind
Data Up	Data +1	Play Back
Data Down	Data –1	Stop
Store	Write data into EEPROM. RAM	Pause

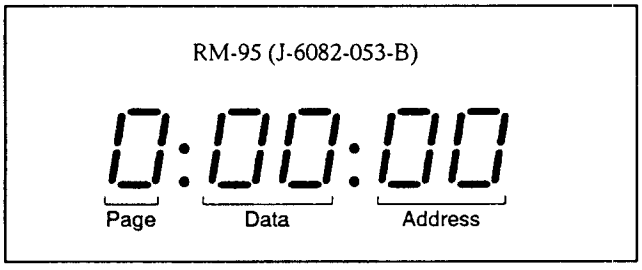

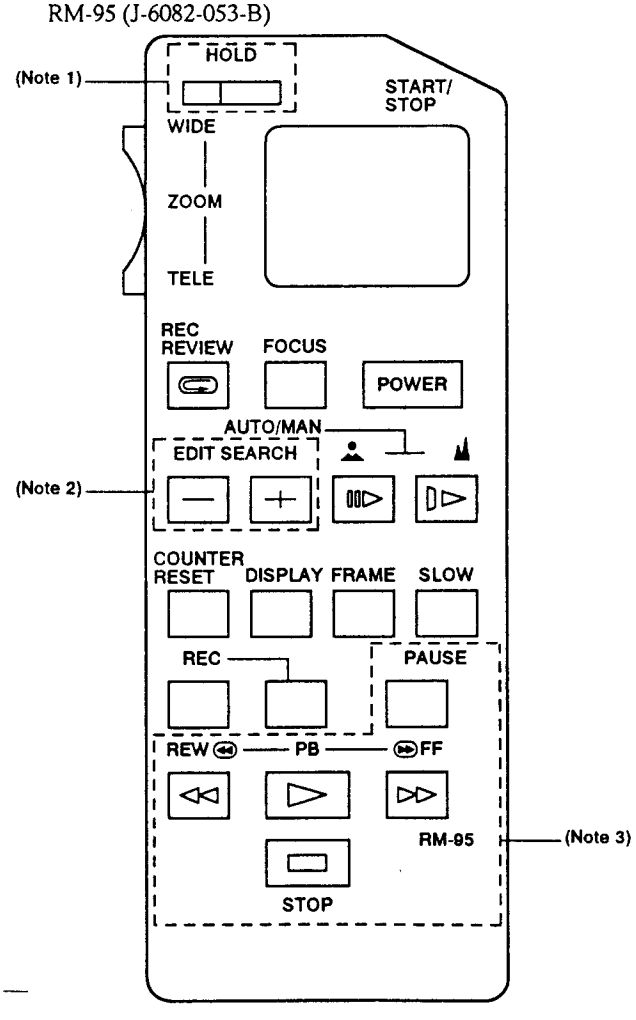

For Service Manuals Contact
MAURITRON TECHNICAL SERVICES
8 Cherry Tree Rd, Chinnor
Oxon OX9 4QY
Tel:- 01844-351694 Fax:- 01844-352554
Email:- enquiries@mauritron.co.uk

7-1-3. SENSER LANC Memory Map

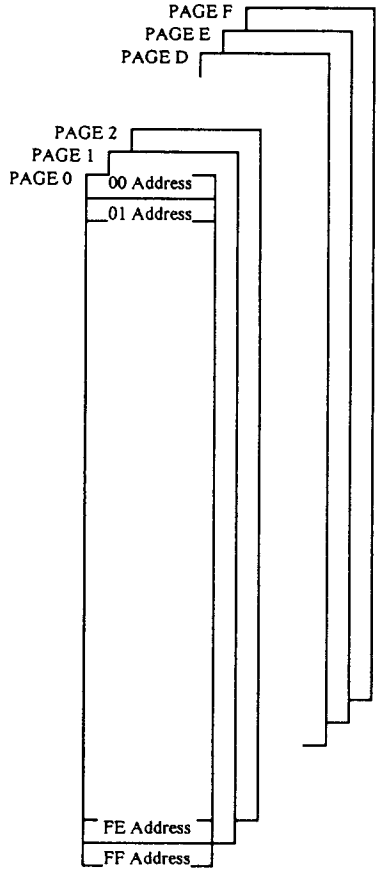

PAGE	Page allocation	Description
0	Service	
1	Mode Control RAM	RAM and I/O interface data memory area required for operating the mode controller. Data is not held when the power is turned off because this area is not ROM.
2	Mode Control I/O	
3	Mechanical Control RAM	RAM and I/O memory area of the mechanical controller.
4	Mode Control I/O	
5	Camera microcompuler RAM	RAM and I/O memory area of the camera micro controller.
6	Camera microcompuler I/O	
7	Spare	
8	Spare	
9	Spare	
A	Spare	
B	Spare	
C	Spare	
D	VTR EE-PROM	ROM memory area of the VTR part. Data of this area is held by EE-PROM when the power is tuned off. Releasing protect is required for changing data.
E	Camera EE-PROM2	ROM memory area of the camera part. Data of this area is held by EE•P•ROM when the power is tuned off.
F	Camera EE-PROM1	

Note) There are 16 types of page from 0 to F. The allocation of page is as the above list. Only the memory of page D, E and F is not erased when the power is turned off as the EVR (Electronic Variable resistor).

For Service Manuals Contact
MAURITRON TECHNICAL SERVICES
8 Cherry Tree Rd, Chinnor
Oxon OX9 4QY
Tel:- 01844-351694 Fax:- 01844-352554
Email:- enquiries@mauritron.co.uk

7-1-4 Types of Self-diagnostic Feature

This unit has ADJUST mode and TEST mode as follows:

MODE		Contents
ADJUST	Camera adjustment	Refer to Camera Adjustment
	Switching position adjustment	Refer to each adjustment page
	Battery DOWN adjustment	
TEST	Pass adjustment track shift	When adjusting tape pass, set this mode and shift the tracking.
	Emergency STOP inhibition	Detection of emergency is inhibited. This allows the following items. • Power is not turned off when the battery is ended. • SP/LP is not automatically distinguished. • Emergency is not detected except for TOP/END detection of the TAPE.
	Read of emergency code	The following functions are added to the emergency display function currently in use. ① The lithium battery is not required because to memorize into EE-PROM is allowed. ② The first emergency and the last emergency are memorized. ③ The mode when the emergency is generated is memorized, in addition to the emergency contents.
	Motor single check	Rotating in forward direction, reverse direction, stopping of each motor can be separately controlled. • Drum motor • Capstan motor • Loading motor
	Function switch check	The acceptance of the function switch of the unit can be confirmed by designating an address. On the contrary, RM-95 can command the substitution for the function switch of the unit.
	Mechanical switch check	The contents of the mechanical switch and the mode switch can be confirmed.
	Sensor check	The following sensor is input by performing A/D converting, and the A/D converted value can be confirmed. TOP sensor, End sensor, S REEL FG, T REEL FG, Thermistor for SWP correction, DEW sensor.
	Reception contents check of wireless remote control	The received code contents of the remote control code can be confirmed.

For Service Manuals Contact
MAURITRON TECHNICAL SERVICES
8 Cherry Tree Rd, Chinnor
Oxon OX9 4QY
Tel:- 01844-351694 Fax:- 01844-352554
Email:- enquiries@mauritron.co.uk

7-1-5. How to use practically

How to use:

How to set the adjustment mode and the TEST mode

Set RM-95 to the service mode. (HOLD SW "ON")

How to change and write data

Press the PAUSE button of RM-95. Pressing PAUSE button is not required for some RAM and I/O area.

Change and write data of EE-PROM

Removing PROTECT is required. The PROTECT is removed by setting as follows:

PAGE 1	Address 00	Data 01

But CAMERA system don't need release, because don't set PROTECT.

How to release each mode

Releasing from EE-PROM area	Be sure to return the data of PAGE 1 address 00 to 00 from 01, and then turn off the service mode of RM-95.
Releasing from RAM and I/O area	Turn off the service mode or turn off the power, because hoding of data is not required.

- In order to perform the pass track shift ····· Refer to page 277.
- In order to inhibit the emergency detection ····· Refer to the list in page 282.
- In order to check the emergency code ····· Refer to page 283.
- In order to operate the motor singly ····· Refer to page 287.
- In order to check the function switch ····· Refer to page 285.
- In order to check the mechanical switch ····· Refer to page 284.
- In order to read the A/D converted value ····· Refer to page 287.
- In order to check the reception contents of the wireless remote control ····· Refer to page 287.

SECTION 8
CAMERA ADJUSTMENTS

During the adjustment, see the arrangement diagram for adjustment parts from page 272.

8-1. PRE-ADJUSTMENT PREPARATIONS (CAMERA BLOCK)

8-1-1. List of Servicing Jigs

- Oscilloscope
- Regulated power supply (2 units)
- Vectorscope
- Digital voltmeter
- Adjusting screwdriver
- Color monitor
- Stop watch
- L lench (1.25 mm)

Ref. No.	Part Name	Part No.	Use
J-1	Filter (C14) for color temperature correction	J-6080-058-A	Auto white balance adjustment/confirmation Outdoor white balance adjustment/confirmation
J-2	ND filter 1.0	J-6080-808-A	Max. gain adjustment (two filters used)
	ND filter 0.4	J-6080-806-A	Iris adjustment, shutter in/out adjustment
	ND filter 0.3	J-6080-818-A	Max. gain adjustment (two used)
	ND filter 0.1	J-6080-807-A	Iris adjustment, shutter in/out adjustment, Max. gain adjustment
J-3	Pattern box PTB-500	J-6029-140-A	
J-4	Pattern box color chart	J-6020-250-A	
J-5	Siemens star chart Transmission type simens-star chart	J-6080-875-A J-6080-923-A	Either of the siemens-star charts which appear during adjustment may be used.
J-6	AF microcomputer data reading jig*1	J-6082-025-A	
J-7	Adjustment remote controller*2	J-6082-053-B	
J-8	Extension cord (2P 1.5 mm pitch)	J-6082-873-A	To connect FU-104 board W991 and DC-DC converter
	Extension cord (5P 1.5 mm pitch)	J-6082-043-A	To connect VC-96 board CN304 and DC-DC converter
	Extension cord (4P 1.5 mm pitch)	J-6082-042-A	To connect VC-96 board CN307 and VA-70 board W701
J-9	Extension cord (20P)	J-6082-063-B	To connect VA-70 board CN703 and CT-40 board CN705
J-10	Extension cord (12P 1.0 mm pitch)	J-6082-056-A	To connect VC-96 board CN305 and VA-70 board W702
J-11	CPA connector jig	J-6082-109-A	Check point array on the VC-96 board.

*1 Change the value of R1 from 10kΩ to 100kΩ in the AF microcomputer data reading jig. (If the value is kept to 10k Ω , the adjustment data can not change because of the difference of the impedance.)
When adjustment the old-model Handy Cam, 100kΩ is allowed to perform the adustment.

*2 Microcomputer IC in the adjustment Remote controller except for μPD7503G-C56-12 (8-759-148-35) does not allow the page selecting. Replace the microcomputer in such a case.

For Service Manuals Contact
MAURITRON TECHNICAL SERVICES
8 Cherry Tree Rd, Chinnor
Oxon OX9 4QY
Tel:- 01844-351694 Fax:- 01844-352554
Email:- enquiries@mauritron.co.uk

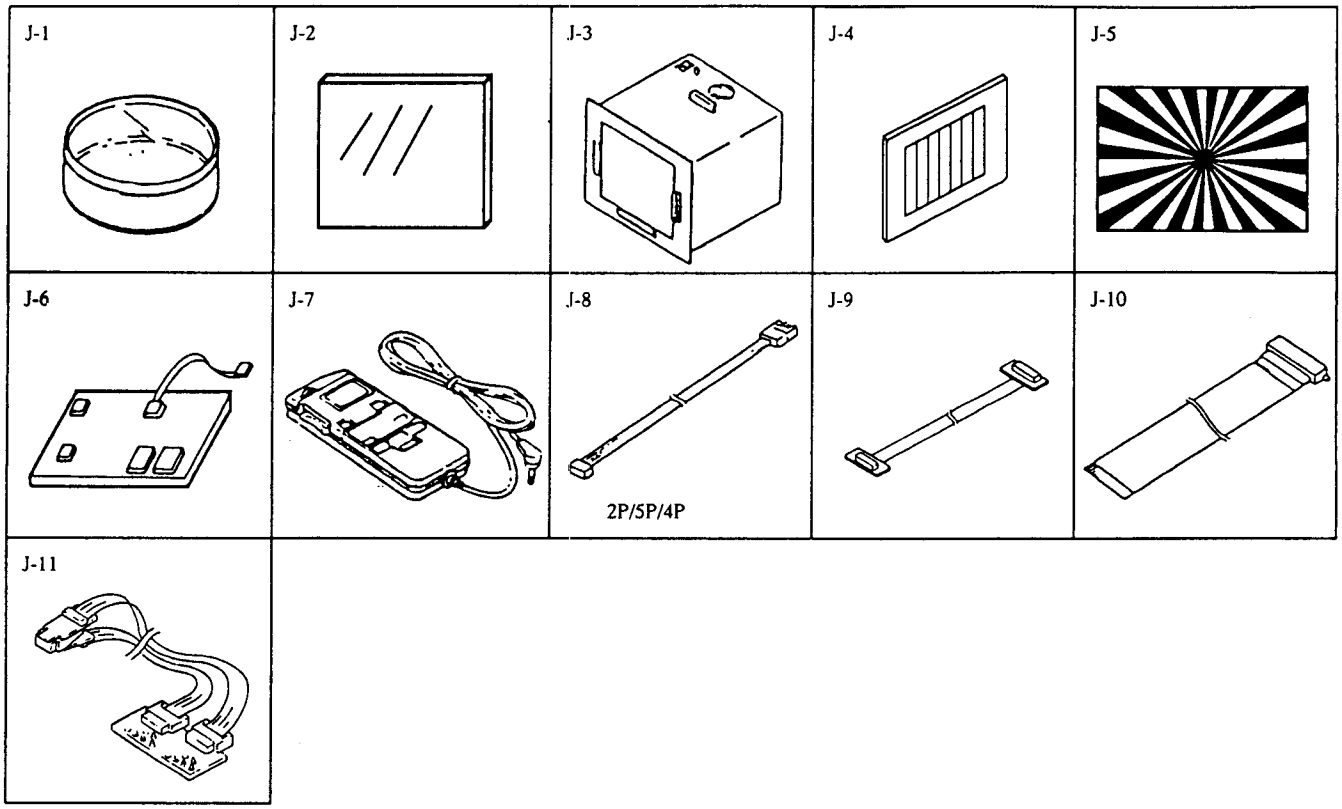

Fig. 8-1.

For Service Manuals Contact
MAURITRON TECHNICAL SERVICES
8 Cherry Tree Rd, Chinnor
Oxon OX9 4QY
Tel:- 01844-351694 Fax:- 01844-352554
Email:- enquiries@mauritron.co.uk

8-1-2. Preparations

Note: Refer to "2. DISASSEMBLY" for details on removal of the cabinet and various boards.

1) Connect the various devices for adjustment as shown in Fig. 8-3.
(Except for "Prime Oscillation Adjustment" and "PLL Adjustment", the adjustment can be done with camera and video blocks connected.)

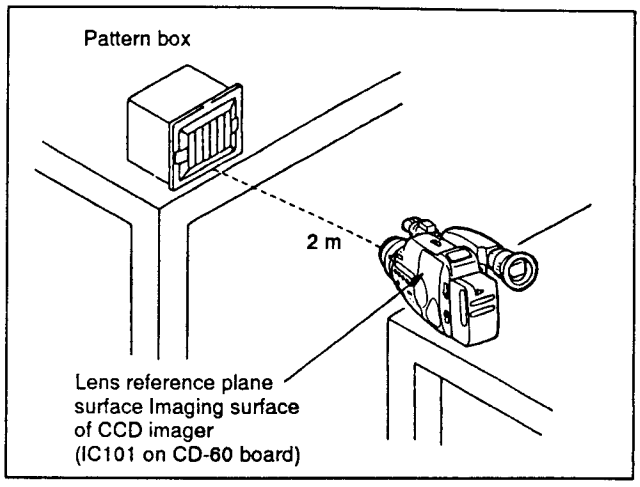

Fig. 8-2.

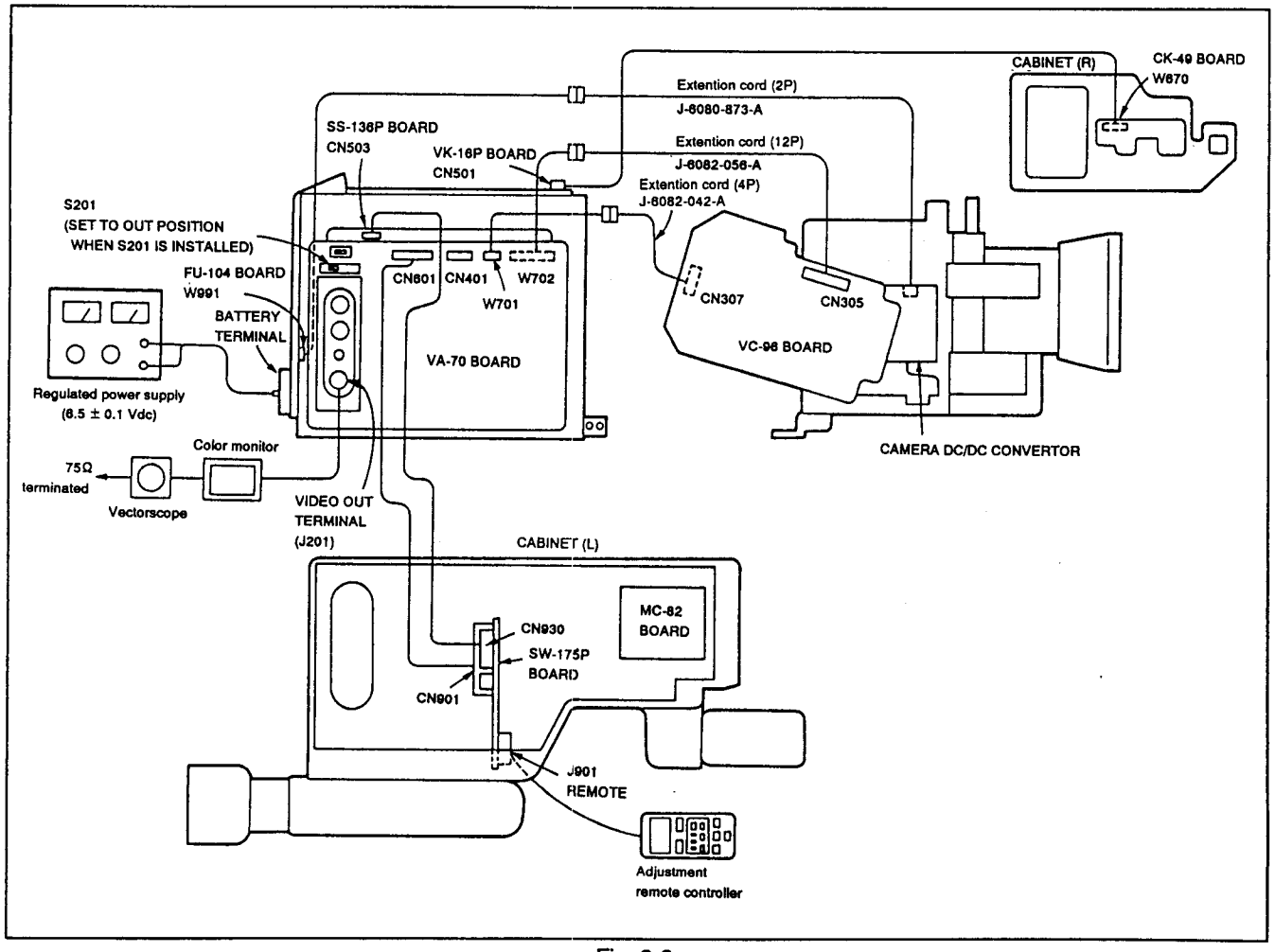

Fig. 8-3.

For Service Manuals Contact
MAURITRON TECHNICAL SERVICES
8 Cherry Tree Rd, Chinnor
Oxon OX9 4QY
Tel:- 01844-351694 Fax:- 01844-352554
Email:- enquiries@mauritron.co.uk

8-1-3. Precautions

1. Setting of switches

Unless otherwise specified, the switches are set to the following positions and adjustment is made without a cassette inserted.

1. Camera/video power switch (S514 on VK-16P board) .....CAMERA
2. Standby switch (S900 on SW-175 board).....STANDBY
3. Auto-lock switch (S670 on CK-49 board).....OFF
4. White balance button (S676 on CK-49 board) ..... ☼ (indoors white balance mode)
5. Shutter speed button (S671 on CK-49 board) .....NORMAL (1/50)
6. Input/output select switch (S201 on VA-70 board) .....OUT(※ Except for AEP, UK model)
7. Back-light button (S675 on CK-49 board).....OFF
8. Program AE button (S672 on CK-49 board) .....NORMAL (NO indications on LCD)

2. Adjustment order

As a rule, the adjustments are performed in the listed order.

3. Subjects

1) Color bar chart (standard picture frame)
When performing adjustment using the color bar chart, adjust the picture frame shown in Fig. 8-4. (standard picture frame).
2) White pattern (standard picture frame)
Remove the color bar chart from the pattern box and use the zoom lever so that the white pattern has the same size and is in the same position as the color bar chart (standard picture frame).
3) All white pattern
Remove the color bar chart from the pattern box and set the zoom lever fully to the TELE (85 mm) side.
4) Siemens star
Adjust the direction of the camera so that center of the Siemens star is lined up with the center of the monitor screen on the monitor TV screen.

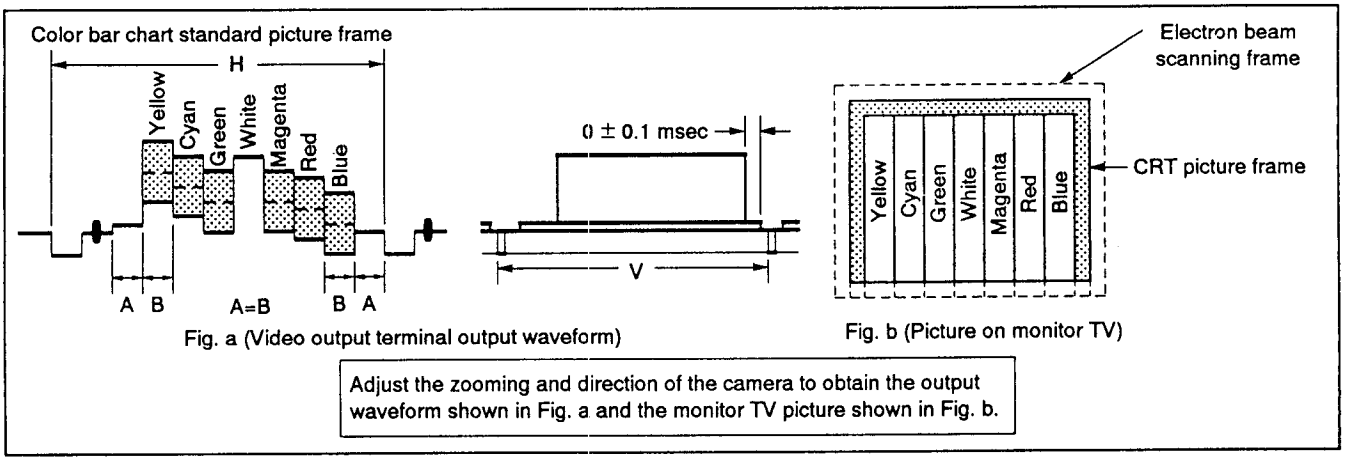

Fig. a (Video output terminal output waveform)

Fig. b (Picture on monitor TV)

Adjust the zooming and direction of the camera to obtain the output waveform shown in Fig. a and the monitor TV picture shown in Fig. b.

Fig. 8-4.

For Service Manuals Contact
MAURITRON TECHNICAL SERVICES
8 Cherry Tree Rd, Chinnor
Oxon OX9 4QY
Tel:- 01844-351694 Fax:- 01844-352554
Email:- enquiries@mauritron.co.uk

8-1-4. Adjustment Remote Controller

An EVR (electronic variable resistor) is used as the adjustment element for the camera block, replacing the conventional semi-fixed resistor. The EVR is controlled by the camera control microcomputer (IC501 on VC-96 board). This microcomputer reads the data written in the nonvolatile memory of the microcomputer and sends it to the EVR. The EVR D-A converts this data (8 bits for each adjustment point) and creates the adjustment voltage.

Thus, it is necessary to change the adjustment data contained in the nonvolatile memory when adjusting the camera block, and the adjustment memory is used for this purpose.

The adjustment remote controller performs bidirectional communications with the camera control microcomputer using the remote control signal lines (LANC). Adjustment page, adjustment addresses and adjustment data increment/decrement commands are sent to the camera control microcomputer from the adjustment remote controller. Adjustment page, adjustment addresses and adjustment data are sent from the camera control microcomputer to the adjustment remote controller.

Note: The microcomputer IC in the adjustment remote controller except for new microcomputer (UPD7503G-C56-12) dose not allow the adjustment page selecting. Rplace with the new microcomputer (8-759-148-35) in such a case.

1. Use of adjustment remote controller

1) Connect the adjustment remote controller to the remote terminal (J901 on SW-175P board).
2) Turn on the power of the main unit.
3) Set the HOLD switch of the adjustment remote controller to the HOLD position (SERVICE position).)
4) If the connection is correct, the following is displayed on the adjustment remote control LCD.

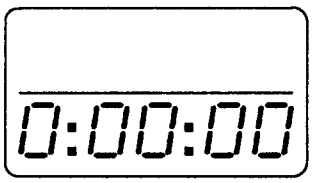

Fig. 8-5.

5) Specify your desired adjustment page by the adjustment remote controller. Presssing the EDIT SEARCH (+) increments the adjustment page. Pressing the EDIT SEARCH (–) decrements it. The adjustment page is shown in the hexadecimal numbers and there are 16 of them from 0 to F. The CAMERA adjustment page is page F and Pressing the EDIT SEARCH (–) button one push. (The adjustment data varies from one set to another.)

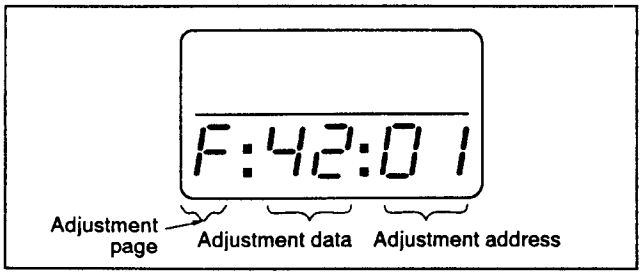

Fig. 8-6.

6) Specify your desired adjustment address by the adjustment remote controller. Pressing the FF (▶▶) button increments the adjustment address, and pressing the REW (◀◀) button decrements it.
(The adjustment address is shown in the decimal number and there are 256 of them from 00 to FF. The adjustment address corresponds to the output terminal of the EVR (IC301 on the VC-96 board, IC504 on the VC-96 board, and IC004 of the MX-10 board). Refer to Table 8-2 for adjustment of each address.)
7) Perfom adjustment by incrementing or decrementing the adjustment data. The adjustment data is incremented by pressing the PLAY (▶) button. The adjustment data is decremented by pressing the STOP (■) button.
   - The adjustment data is indicated in hexadecimal. There are 256 values from 00 to FF.

Hexadecimal	0 1 2 3 4 5 6 7 8 9 A B C D E F
LCD Indication	0 1 2 3 4 5 6 7 8 9 A b c d E F
Decimal equivalent	0 1 2 3 4 5 6 7 8 9 10 11 12 13 14 15

Table 8-1.

   - The adjustment data corresponds to the output voltage of the EVR (IC301 on the VC-96 board, IC504 on the VC-96 board, and IC004 on the MX-10 board) as follows:
     MX-10 board IC004:2.0 ↔ 5.0 Vdc
     VC-96 board IC301:0 ↔ 5.0 Vdc
     VC-96 board IC504:1.0 ↔ 3.5 Vdc
8) Change the adjustment address with the FF (▶▶) or REW (◀◀) button in order to store the adjustment data into the non-volatile memory built in the EVR/AWB microcomputer (VC-96 board IC501).
(If this operation is omitted, new adjustment data will not be stored into the non-volatile memory.)
9) There is a function provided to make note of the last error cuased by the COUNTER RESET button during operation of the set even if the power is turned off. This LAST MEMO EMERGENCY (last error) can be cleared.

8-1-5. Precautions on use of adjustment remote controller

It is possible to accidentally erase correct adjustment data due to an error in operation of the adjustment remote controller. In order to prevent this, we recommend that you make a note of all adjustment data before adjustment and record the new adjustment data after completing each adjustment item.

For Service Manuals Contact
MAURITRON TECHNICAL SERVICES
8 Cherry Tree Rd, Chinnor
Oxon OX9 4QY
Tel:- 01844-351694 Fax:- 01844-352554
Email:- enquiries@mauritron.co.uk

8-1-6. Adjustment address table (page F)

Note: Data already described in the adjustment data memo column are fixed data.

Adjustment Address	Adjustment Item	Remarks [Adjustment voltage output terminal]	Adjustment Data Memo Column
01	R CONT	[Pin ⑱ of IC004 on MX-10 board] } Auto white balance adjustment	
02	B CONT	[Pin ⑲ of IC004 on MX-10 board] } Auto white balance adjustment	
03	C1 GAIN	[Pin ② of IC004 on MX-10 board] Matrix adjustment (3)	
04	B GAIN	[Pin ③ of IC004 on MX-10 board] } Pre-white balance adjustment	
05	R GAIN	[Pin ④ of IC004 on MX-10 board] } Pre-white balance adjustment	
06	Y2 GAIN	[Pin ⑤ of IC004 on MX-10 board] Matrix adjustment (2)	
07	Y1 GAIN	[Pin ⑥ of IC004 on MX-10 board] Matrix adjustment (1)	
08	Y_H GAIN	[Pin ⑦ of IC004 on MX-10 board] Y_H Level adjustment	
09	R-Y GAIN	[Pin ⑧ of IC004 on MX-10 board] } Color reproduction adjustment	
0A	B-Y GAIN	[Pin ⑨ of IC004 on MX-10 board] } Color reproduction adjustment	
0B	R-Y HUE	[Pin ⑫ of IC004 on MX-10 board] } Color reproduction adjustment	
0C	B-Y HUE	[Pin ⑬ of IC004 on MX-10 board] } Color reproduction adjustment	
0D	SHP LEVEL	[Pin ⑱ of IC301] H aperture adjustment	
0E	Y LEVEL	[Pin ⑲ of IC301] Y level adjustment	
0F	VAP GAIN	[Pin ② of IC301]	90
10	SET UP	[Pin ③ of IC301] Setup adjustment	
11	CHROMA LEVEL	[Pin ④ of IC301] Chrama level adjustment	
12	V SUB CONT	[Pin ⑤ of IC301] V SUB adjustment	
13	PG CONT	[Pin ⑥ of IC301] PG CONT adjustment	
14	$Y\gamma$ CONT	[Pin ⑦ of IC301]	AE
15	WHITE CLIP	[Pin ⑧ of IC301] White clip adjustment	
16	SYNC LEVEL	[Pin ⑨ of IC301] Sync level adjustment	
17	BURST LEVEL	[Pin ⑫ of IC301] Burst level adjustment	
18	MAX GAIN	[Pin ⑬ of IC301] Max gain adjustment	
19	IRIS REF	[Pin ⑱ of IC504] Iris adjustment	
1A	AGC REF	[Pin ⑲ of IC504] AGC adjustment	
1B	HALL GAIN	[Pin ② of IC504] } Hall adjustment	
1C	HALL OFFSET	[Pin ③ of IC504] } Hall adjustment	
1D	FADER LEVEL	[Pin ④ of IC504] Not used	—
1E	AE OFFSET	[Pin ⑤ of IC504] AE OFFSET adjustment	
1F	FADER CONT	[Pin ⑥ of IC504]	00
20	FOCUS SPEED	[Pin ⑦ of IC504] Not used	—
21	ZOOM SPEED	[Pin ⑧ of IC504]	
22	M IRIS CONT	[Pin ⑨ of IC504] Not used	—
23	M AGC CONT	[Pin ⑫ of IC504] Not used	—
24	AGC IN PULSE	[Pin ⑬ of IC504]	
25	IN-OUT		
26	M12 THR		
27	KATAMUKI		
28	FA-WM		
29	FA-BM		
2A	FH-WM		
2B	FH-BM		

For Service Manuals Contact
MAURITRON TECHNICAL SERVICES
8 Cherry Tree Rd, Chinnor
Oxon OX9 4QY
Tel:- 01844-351694 Fax:- 01844-352554
Email:- enquiries@mauritron.co.uk

Table 8-2. (1)

Adjustment Address	Adjustment Item	Remarks [Adjustment voltage output terminal]	Adjustment Data Memo Column
2C	FA-SMH		
2D	FA-SML		
2E	FH-SMH		
2F	FH-SML		
30	LOW-F-SPEED		
31	MAN-F-SPEED		
32	STEP-A		
33	END-SENS-V		
34	ZOOM POSI1		
35	ZOOM POSI2		
36	ZOOM POSI3		
37	ZOOM POSI4		
38	ZOOM POSI5		
39	FOCUS POSI1		
3A	SEARCH-V		
3B	BACKRUSH2		
3C	BACKRUSH-MODE3		
3D	ZOOM TAN MASK		
3E	ZOOM-END-V		
3F	ZOOM-MODOSI		
40–57			
58	ZOOM-SPEED1	High speed	7A
59	ZOOM-SPEED2	Middle speed (Remote controll)	35
5A	ZOOM-SPEED3	Low speed	20
5B	ZOOM-SPEED4	Macro zoom speed	53
5C			00
5D			02
5E–5F			
60	IRISREF NOR	Standard AE level } Standard AE level and Program AE level adjustment	
61	IRISREF PO	Portrait AE level } Standard AE level and Program AE level adjustment	
62	IRISREF SP	Sports AE level } Standard AE level and Program AE level adjustment	
63–6A			
6B	MAXSHUT PO (H)	Portrait max shutter speed	00
6C	MAXSHUT PO (L)	Portrait max shutter speed	CE
6D	MAXSHUT SP (H)	Sports max shutter speed	00
6E	MAXSHUT SP (L)	Sports max shutter speed	E6
6F	REF WIDTH	Program AE level hysteresis	0C
70			00
71	SHUT MULTI		40
72			
73	SHUT CONT 1		06
74	SHUTSTEP MULTI		02
75	IRIS OPEN		20
76	REF TURBO		40
77			
78	TURBO WIDTH		0C

Table 8-2. (2)

Adjustment Address	Adjustment Item	Remarks [Adjustment voltage output terminal]	Adjustment Data Memo Column
79			
7A	TURBO TH		0C
7B			
7C	SHUT COUNT 2		01
7D	SHUT COUNT 3		01
7E–7F			
80	USER R-Y GAIN		10
81	USER B-Y GAIN		0D
82	USER B-Y HUE		0D
83	USER R-Y HUE		0C
84	USER SHP LEVEL		0A
85	USER Y LEVEL		0C
86			
88		Hall adjustment	
87			
89			
8A			
8B			
8C–8F			
90	R3200 MSB	3200K preset data (red)	
91	R3200 LSB		
92	B3200 MSB	3200K preset data (blue)	
93	B3200 LSB		
94	G3200 MSB	3200K preset data (green)	
95	G3200 LSB		
96	SHUTTER IN	Shutter in/out adjustment	
97	SHUTTER OUT		
98	IRIS IN		B0
99	IRIS OUT		C0
9A–AB			
AC	BTM SLP R		48
AD	BTM SLP B		78
AE	MDL SLP R		60
AF	MDL SLP B		40
B0	TOP SLP R		66
B1	TOP SLR B		18
B2	KEIKO R		66
B3	KEIKO B		18
B4	BTM UP		C2
B5	BTM DOWN		A0
B6	MDL UP		AD
B7	MDL DWN		96
B8	TOP UP		78
B9	TOP DWN		60
BA	KEIKO		6C
BB	KEIKO DWN		60

Auto white balance preset adjustment

For Service Manuals Contact
MAURITRON TECHNICAL SERVICES
8 Cherry Tree Rd, Chinnor
Oxon OX9 4QY
Tel:- 01844-351694 Fax:- 01844-352554
Email:- enquiries@mauritron.co.uk

Table 8-2. (3)

Adjustment Address	Adjustment Item	Remarks [Adjustment voltage output terminal]	Adjustment Data Memo Column
BC	R TOP LMT		6E
BD	R DWN LMT		21
BE	B TOP LMT		8C
BF	B IN TOP		65
C0	B IN MAX		5C
C1	B OUT MIN		5C
C2	B OUT DWN		4A
C3	B DWN LMT		1B
C4	LL LMT		06
C5	TM DIVID		5C
C6	BM DIVID		39
C7	DELAY TM		06
C8	FAST TM		40
C9	OUT HYS OFF		0E
CA	OUT B HYS		07
CB–CF			
D0	SYSTEM CONFIGRATION		01
D1			
D2–D5			
D6			
D7			
D8			
D9			
DA			
DB			
DC–DF			
E0	DISPLAY MODE		00
E1			
E2–EA			
EB	TEST MODE	The following test mode is selected by changing adjustment data.	00

For Service Manuals Contact
MAURITRON TECHNICAL SERVICES
8 Cherry Tree Rd, Chinnor
Oxon OX9 4QY
Tel:- 01844-351694 Fax:- 01844-352554
Email:- enquiries@mauritron.co.uk

Adjustment Data	Test Mode	Remarks
00	NORMAL	
01	F-HANTING	Not used
03	ZOOM-POSI	
05	IRIS-POSI	HALL SENS level
0B	AGC-CONT	AGC CONT level
0D	FOCUS-POSI	Not used
11	SHUTTER	Shutter speed
13	IRIS LEVEL	IRIS CONT level
ED	FILTER-FHM	Not used
EF	FILTER-FAM	
F1	FILTER-SFH L	
F3	FILTER-SFH H	
F5	FILTER-SFA L	
F7	FILTER-SFH H	
F9	FILTER-FA L	
FB	FILTER-FH L	
FD	FILTER-FA H	
FF	FILTER-FH H	

Table 8-2. (4)

<table>
<tr><th>Adjustment Address</th><th>Adjustment Item</th><th>Remarks
[Adjustment voltage output terminal]</th><th>Adjustment Data Memo Column</th></tr>
<tr><td>EC</td><td>AWB MODE 3</td><td>The following auto white balance mode is selected by changing the adjustment data.
<table><tr><th>Adjustment Data</th><th>AWB mode</th></tr><tr><td>01</td><td>NORMAL</td></tr><tr><td>02</td><td>AUTO WHITE BALANCE CHECK</td></tr></table></td><td>01</td></tr>
<tr><td>ED</td><td>AWB MODE 2</td><td></td><td>00</td></tr>
<tr><td>EE</td><td>AWB MODE 1</td><td>The following auto white balance adjustment mode is selected by changing the adjustment data.
<table><tr><th>Adjustment Data</th><th>Adjustment Mode</th></tr><tr><td>00</td><td>AWB MODE 1</td></tr><tr><td>D0</td><td>WB DIRECT</td></tr><tr><td>F0</td><td>WB FREE</td></tr><tr><td>01</td><td>3200k Data fetch 1</td></tr><tr><td>23</td><td>3200k Data fetch 2</td></tr></table></td><td>00</td></tr>
<tr><td>EF</td><td></td><td></td><td>00</td></tr>
<tr><td>F0</td><td></td><td></td><td></td></tr>
<tr><td>F1</td><td></td><td></td><td></td></tr>
<tr><td>F2</td><td></td><td></td><td></td></tr>
<tr><td>F3</td><td></td><td></td><td></td></tr>
<tr><td>F4–FD</td><td></td><td>Not used</td><td></td></tr>
<tr><td>FE</td><td></td><td></td><td></td></tr>
<tr><td>FF</td><td></td><td></td><td></td></tr>
</table>

Table 8-2. (6)

For Service Manuals Contact
MAURITRON TECHNICAL SERVICES
8 Cherry Tree Rd, Chinnor
Oxon OX9 4QY
Tel:- 01844-351694 Fax:- 01844-352554
Email:- enquiries@mauritron.co.uk

8-1-7. Check Point Array

Almost all of the measurement points for camera block adjustment are located in the check point array on the VC-96 board. Solder short lead wires onto the terminals needed for adjustment and connect an oscilloscope, etc.
The terminal numbers and signal names for the check point array are shown in Table 8-3.

Note: The CPA connector jig (J-6082-109-A) allows you to connect an oscilloscope easily.

Terminal No.	Signal Name	Terminal No.	Signal Name
A1	N.C	B1	N.C
A2	PG CONT	B2	N.C
A3	N.C	B3	Y LPF OUT
A4	N.C	B4	V SUB
A5	VAP OUT	B5	VAP SLICE
A6	TP	B6	N.C
A7	WB-G	B7	YH GAIN
A8	CAM Y	B8	Y2 GAIN
A9	YH	B9	N.C
A10	CAM C	B10	GND
A11	YH OUT 1	B11	IRIS OUT

* N.C.....no connection

Table 8-3.

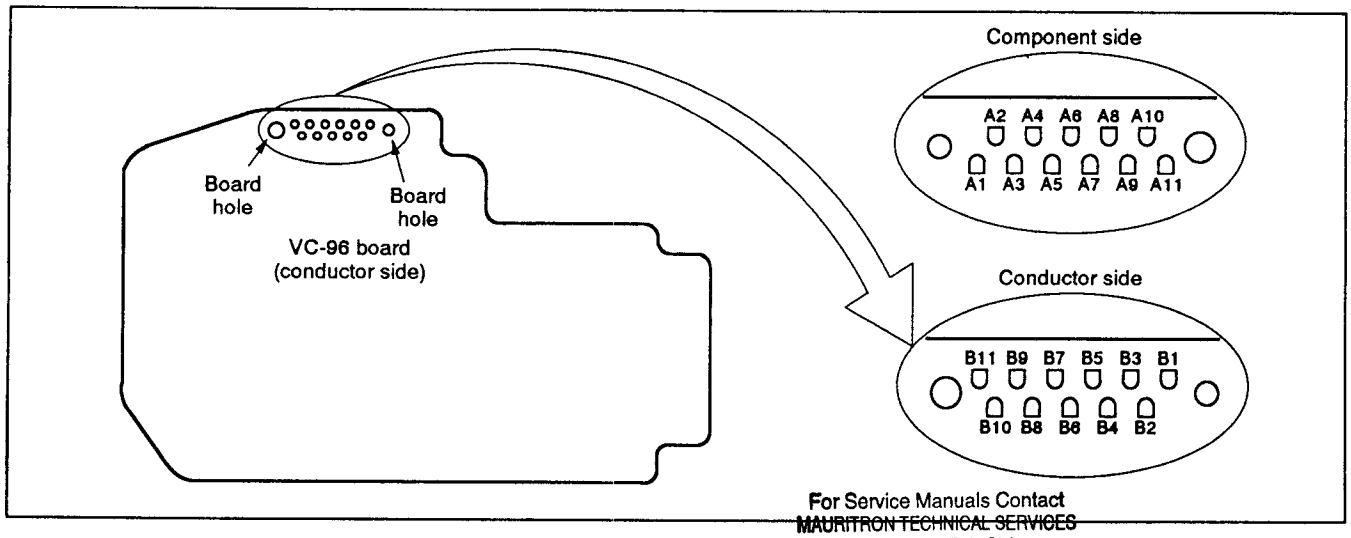

For Service Manuals Contact
MAURITRON TECHNICAL SERVICES
8 Cherry Tree Rd, Chinnor
Oxon OX9 4QY
Tel:- 01844-351694 Fax:- 01844-352554
Email:- enquiries@mauritron.co.uk

Fig. 8-7.

8-1-8. AF Microcomputer Data Reading Jig

The AF microcomputer data reading jig converts the serial data (output data varies according to hall (iris) state, shutter speed, AGC CONT level, IRIS CONT level, etc.) for adjustment output from the camera control microcomputer (IC501 on VC-96 board) into a 2-digit hexadecimal code and displays it on the LED.

Note:

Change the value of R1 from 10kΩ to 100kΩ in the AF microcomputer data reading jig. (If the value is kept to difference of the impedance.)
When adjusting the old-model Handy Cam, 100kΩ is allowed to perform the adjustment.

Connections:
Connect as shown in the diagram below.

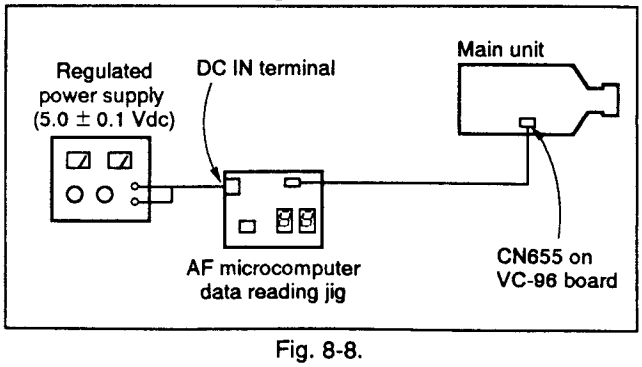

Fig. 8-8.

8-1-9. Data Processing

For some of the adjustment items, calculation from the data (hexadecimal) indicated on the AF microcomputer data reading jig and adjustment remote controller is needed to obtain the adjustment data. In these cases, convert the hexadecimal values to decimal before calculation and reconvert the result to hexadecimal to obtain the adjustment data. A hexadecimal — decimal conversion table is shown in Table 8-4.

Hexadecimal-Decimal Conversion Table

Hexadecimal lower digit / Hexadecimal upper digit	0	1	2	3	4	5	6	7	8	9	A (A)	B (b)	C (c)	D (d) ②	E (E)	F (F)
0	0	1	2	3	4	5	6	7	8	9	10	11	12	13	14	15
1	16	17	18	19	20	21	22	23	24	25	26	27	28	29	30	31
2	32	33	34	35	36	37	38	39	40	41	42	43	44	45	46	47
3	48	49	50	51	52	53	54	55	56	57	58	59	60	61	62	63
4	64	65	66	67	68	69	70	71	72	73	74	75	76	77	78	79
5	80	81	82	83	84	85	86	87	88	89	90	91	92	93	94	95
6	96	97	98	99	100	101	102	103	104	105	106	107	108	109	110	111
7	112	113	114	115	116	117	118	119	120	121	122	123	124	125	126	127
8	128	129	130	131	132	133	134	135	136	137	138	139	140	141	142	143
9	144	145	146	147	148	149	150	151	152	153	154	155	156	157	158	159
A(A)	160	161	162	163	164	165	166	167	168	169	170	171	172	173	174	175
①→ B(b)	176	177	178	179	180	181	182	183	184	185	186	187	188	189	190	191
C(c)	192	193	194	195	196	197	198	199	200	201	202	203	204	205	206	207
D(d)	208	209	210	211	212	213	214	215	216	217	218	219	220	221	222	223
E(E)	224	225	226	227	228	229	230	231	232	233	234	235	236	237	238	239
F(F)	240	241	242	243	244	245	246	247	248	249	250	251	252	253	254	255

Note: ( ) is the indication on the jig or adjustment remote commander.

Example: The indication on the jig or adjustment remote commander is BD (b d).
As the upper digit is B (b) and the lower digit is D (d), a decimal value of 189 is obtained from the intersection of ① and ② in the above table.

Table 8-4.

For Service Manuals Contact
MAURITRON TECHNICAL SERVICES
8 Cherry Tree Rd, Chinnor
Oxon OX9 4QY
Tel:- 01844-351694 Fax:- 01844-352554
Email:- enquiries@mauritron.co.uk

8-2. CAMERA SYSTEM ADJUSTMENTS

- Set the address 00 data (on page 5) to 01 and perform the adjustment.
  (WINDOW OFF mode is set. This mode is automatically released by turning the power off.)
- In principle, all adjustments must be made in accordance with Adjustment procedure.
- When replacing lens, do not forget to make the following adjustment.

[Adjustment Sequence]

1) Flange Back Adjustment
2) Auto Focus Adjustment
3) HALL Adjustment
4) IRIS Adjustment
5) Shutter IN/OUT Adjustment

- When replacing CCD imager, do not forget to adjust the camera system property.

For Service Manuals Contact
MAURITRON TECHNICAL SERVICES
8 Cherry Tree Rd, Chinnor
Oxon OX9 4QY
Tel:- 01844-351694 Fax:- 01844-352554
Email:- enquiries@mauritron.co.uk

8-2-1. Flange Back Adjustment

Subject	Siemens star (2 m directly in front of the lens)
Measurement Point	Check with a monitor TV
Measuring Instrument	
Adjusting Element	Flange back adjusting pin
Tools	Phillips screwdriver, flat blade (–) screwdriver

Adjusting method:

1) Press the FOCUS button to set to the MANUAL mode.
2) Position a Siemens star 2 m directly in front of the lens (See Fig. 8-2.).
3) Orient the camera block to have the center of the Siemens star imaged on the monitor TV screen coincide with the monitor screen center.
4) Check to assure the smooth motion of the lens zoom lever to both its extreme WIDE position (8.5 mm) and TELE position (85 mm), and then set it at the extreme WIDE position. (In this process, also check the monitor image to assure proper zooming operation.)
5) Select the page F and the address 19 with the adjustment remote controller, and make note of the adjustment data for this address.
6) Set the adjustment data to FF with the adjustment remote controller. (Iris open mode)
   At this time, adjust the illumination on the Siemens star or place an ND filter over the lens, and confirm that the proper image is displayed on the monitor TV screen.
7) Loosen flange back setscrew ③ with a Phillips screwdriver. (See Fig. 8-9.)
8) Overlap the stopper bottom end ① and focus mark line ②. (See Fig. 8-9.)
9) By turning the flange back adjusting Pin ④ while watching the monitor screen, attain the optimum definition of a wedge at the Siemens star center on the screen. (Turn it a few turns to the left and right to ensure optimum definition.)
   Note: Do not turn the adjusting pin excessively in either direction.
10) While holding the flange back adjusting Pin ④ to prevent further rotation, retighten the flange back setscrew ③.
11) Check to see that the stopper bottom end is set within the range shown in Fig. 8-10 when the focus is matched by turning the focus ring.
    If not, repeat steps 8) through 10).
12) After setting the zoom lever to TELE end, set it to WIDE end again.
13) With the zoom lever fixed at its WIDE end, turn the focusing ring and set it to the position that provides the optimum definition image of the wedge. Check to assure the lower side of stopper is within the range shown in Fig. 8-10.
14) Set the adjustment address to 19 and enter the adjustment data recorded in 5).
    (Iriss normal)
15) Change the adjustment address to store the adjustment data in the memory.

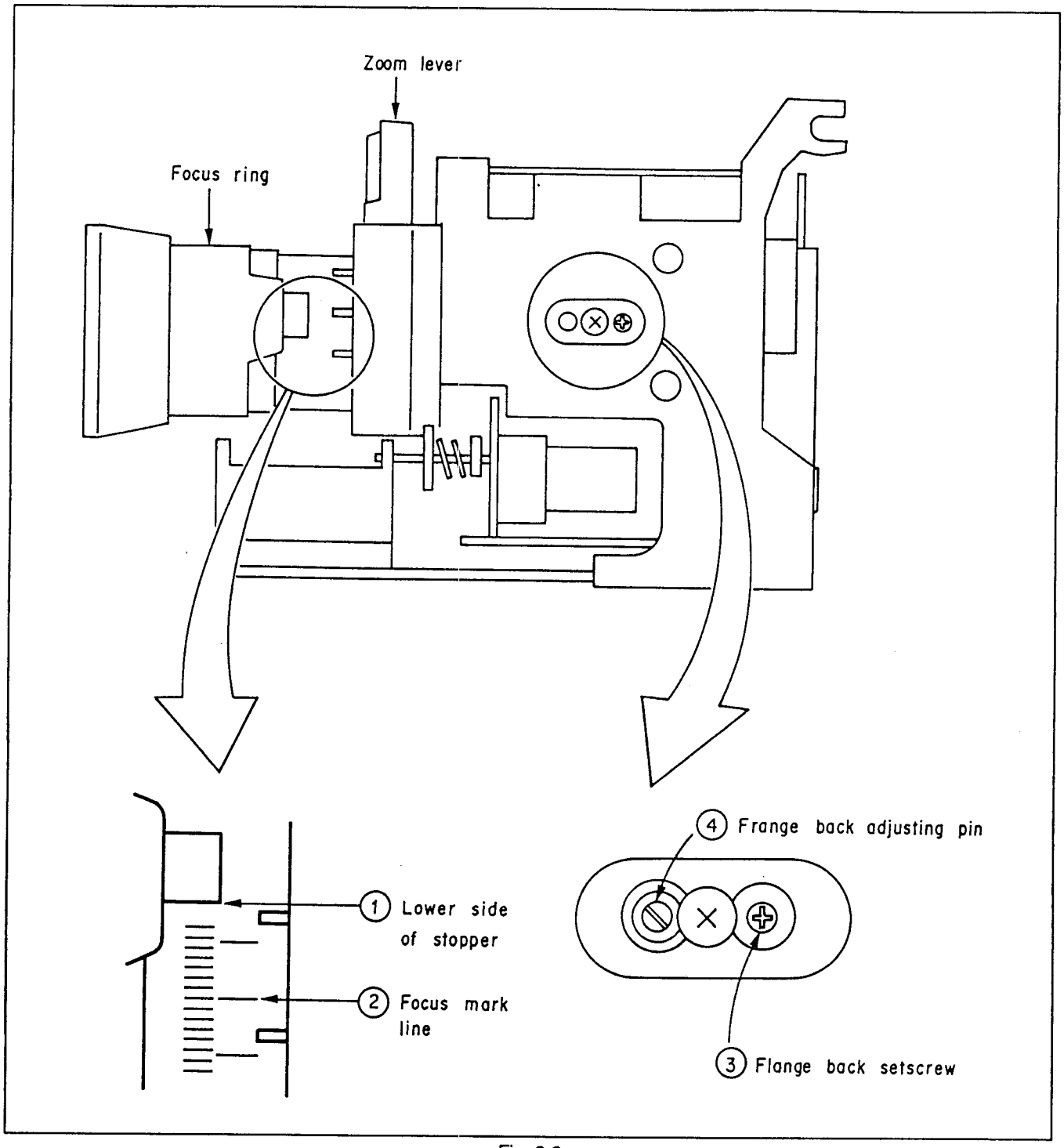

Fig. 8-9

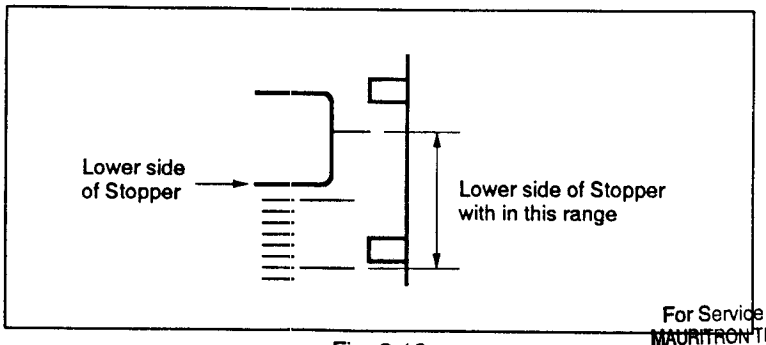

Fig. 8-10

For Service Manuals Contact
MAURITRON TECHNICAL SERVICES
8 Cherry Tree Rd, Chinnor
Oxon OX9 4QY
Tel:- 01844-351694 Fax:- 01844-352554
Email:- enquiries@mauritron.co.uk

8-2-2. Auto Focus Adjustment

Subject	IR AF adjusting chart (2m directly in front of lens reference plane)
Measurement Point	Check with a monitor TV.
Measuring Instrument	
Adjustment page	AF adjustment screw
Adjustment Address	Hexagonal wrench (1.25 mm)
Specified Value	0 ± 1 mm

IR AF Adjusting chart: Fig. 8-11 (a)
Write the following pattern on the white Kent paper (A3 size).

1) Reticle to indicate chart center.
2) Minute pattern to discriminate focus condition.

A pattern example is shown below.

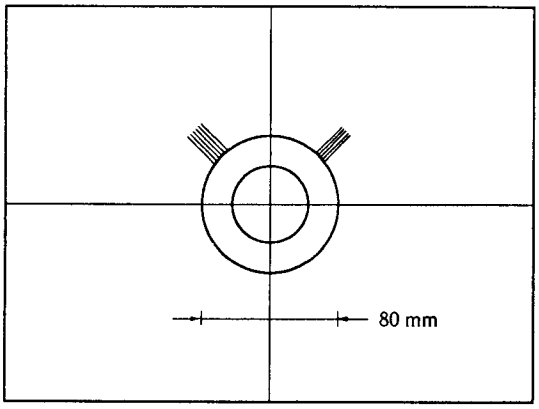

Fig. 8-11 (a).

Adjusting method:

1) Position a IR AF adjusting chart 2m directly in front of the lens reference plane (see Fig. 8-2).
2) Adjust the illumination on the chart so that the proper image is displayed on the monitor TV.
3) Turn on the auto focus.
4) Set the zoom lever to TELE end → WIDE end → TELE end and fix at TELE end.
5) Orient the camera block to have the center of chart imaged on the monitor TV screen coincide with the monitor screen center.
6) Turn the AF adjustment screw with hexagonal wrench (1.25 mm) and adjust the focus on the Siemens star.
7) Turn the focus ring to WIDE end (0.75m).
8) Check to see that the stop position of the focus ring is within ± 1 mm against the optimum focus position.
9) Turn the focus ring to TELE end (∞).
10) Check to see that the stop position is within ± 1 mm against the optimum focus position.
11) Position the IR AF adjusting chart 1m directly in front of the lens reference plane and check the stop position of the focus ring in the same procedure of 2m position. When the difference against the optimum focus position is ± 2.0 mm or more, check if the specification is met after positioning 2m in front of the reference lens plane again after readjusting the AF adjustment screw.

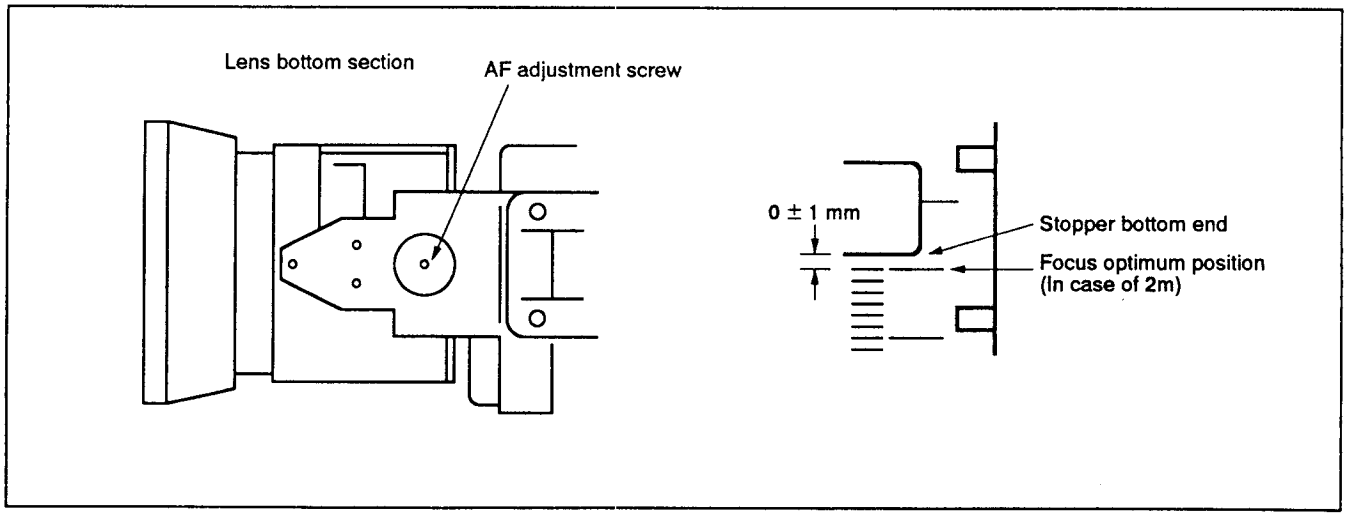

Fig. 8-11 (b).

For Service Manuals Contact
MAURITRON TECHNICAL SERVICES
8 Cherry Tree Rd, Chinnor
Oxon OX9 4QY
Tel:- 01844-351694 Fax:- 01844-352554
Email:- enquiries@mauritron.co.uk

8-2-3. CAMERA DC-DC converter Check (VC-96, CD-60 Board)

Measuring Instrument	Digital voltmeter
CAM 4.9V Check	
Measurement Point	Pin ④ of CN304 on VC-96 board
Specified Value	4.9 ± 0.1 Vdc
4.9V Check	
Measurement Point	Pin ③ of CN101 on CD-60 board
Specified Value	4.9 ± 0.1 Vdc
15V Check	
Measurement Point	Pin ① of CN101 on CD-60 board
Specified Value	15.0 ± 0.2 Vdc
–9V Check	
Measurement Point	Pin ② of CN101 on CD-60 board
Specified Value	–9.00 ± 0.15 Vdc

Checking method:

1) Confirm that each voltage meet the specified value.

For Service Manuals Contact
MAURITRON TECHNICAL SERVICES
8 Cherry Tree Rd, Chinnor
Oxon OX9 4QY
Tel:- 01844-351694 Fax:- 01844-352554
Email:- enquiries@mauritron.co.uk

8-2-4. EVR Initial Settings

Set to the following initial settings of the adjustment data when the CAMERA microcomputer or the CCD IMAGER was replaced.

Adjustment Address	Adjustment Data Initial Value	Adjustment Address	Adjustment Data Initial Value	Adjustment Address	Adjustment Data Initial Value
0E (Y LEVEL)	9C	76 (REF TURBO)	40	B9 (TOP DWN)	60
0F (VAP GAIN)	90	78 (TURBO WIDTH)	0C	BA (KEIKO)	6C
12 (V SUB CONT)	3A	7A (TURBO TH)	0C	BB (KEIKO DWN)	60
13 (PG CONT)	5A	7C (SHUT COUNT 2)	01	BC (R TOP LMT)	6E
14 (Y γ CONT)	AE	7D (SHUT COUNT 3)	01	BD (R DOWN LMT)	21
15 (WHITE CLIP)	FF	80 (USER R-Y GAIN)	10	BE (B TOP LMT)	8C
18 (MAX GAIN)	E0	81 (USER B-Y GAIN)	0D	BF (B IN TOP)	65
19 (IRIS REF)	4C	82 (USER B-Y HUE)	0D	C0 (B IN MAX)	5C
1F (FADER CONT)	00	83 (USER R-Y HUE)	0C	C1 (B OUT MIN)	5C
58 (ZOOM-SPEED1)	7A	84 (USER SHP LEVEL)	0A	C2 (B OUT DWN)	4A
59 (ZOOM-SPEED2)	35	85 (USER Y LEVEL)	0C	C3 (B DWN LMT)	1B
5A (ZOOM-SPEED3)	20	96 (SHUTTER IN)	B1	C4 (LL LMT)	06
5B (ZOOM-SPEED4)	53	97 (SHUTTER OUT)	8B	C5 (TM DIVID)	5C
5C (	00	98 (IRIS IN)	B0	C6 (BM DIVID)	39
5D	02	99 (IRIS OUT)	C0	C7 (DELAY TM)	06
60 (IRISREF NOR)	60	AC (BTM SLP R)	48	C8 (FAST TM)	40
61 (IRISREF PO)	60	AD (BTM SLP B)	78	C9 (OUT HYS OFF)	0E
62 (IRISREF SP)	60	AE (MDL SLP R)	60	CA (OUT B HYS)	07
6B (MAXSHUT PO (H))	00	AF (MDL SLP B)	40	D0 (SYSTEM)	01
6C (MAXSHUT PO (L))	CE	B0 (TOP SLP R)	66	E0 (DISPLAY MODE)	00
6D (MAXSHUT SP (H))	00	B1 (TOP SLP B)	18	EB (MODE)	00
6E (MAXSHUT SP (L))	E6	B2 (KEIKO R)	66	EC (AWB MODE3)	01
6F (REF WIDTH)	0C	B3 (KEIKO B)	18	ED (AWB MODE2)	00
70	00	B4 (BTM UP)	C2	EE (AWB MODE1)	00
71 (SHUT MULTI)	40	B5 (BTM DOWN)	A0	EF (CAM ALON)	00
73 (SHUT CONT 1)	06	B6 (MDL UP)	AD		
74 (SHUTSTEP MULTI)	02	B7 (MDL DWN)	96		
75 (IRIS OPEN)	20	B8 (TOP UP)	78		

Table 8-6.

Adjusting method:

1) Set the adjustment data at the various adjustment addresses to the initial values using the adjustment remote controller.
2) Change the adjustment address to store the last adjustment data in the memory.

For Service Manuals Contact
MAURITRON TECHNICAL SERVICES
8 Cherry Tree Rd, Chinnor
Oxon OX9 4QY
Tel:- 01844-351694 Fax:- 01844-352554
Email:- enquiries@mauritron.co.uk

8-2-5. Prime Oscilation Adjustment (CD-60 Board)

Measurement Point	Pin ③ of DT-77 board
Measuring Instrument	Frequency counter
Adjusting Elemtnt	CT122
Specified Value	14187500 ± 71 Hz

Note: Connect the frequency counter through a buffer amplifier (Oscilloscope, etc.) having high impedance and low capacitance.

Preparation:
1) Remove CD-60 board from the lens block.

Adjusting method:
1) Adjust to 14187500 ± 71 Hz with CT122.

8-2-6. PLL Adjustment (CD-60 Board)

Measurement Point	Pin ⑳ of IC121
Measuring Instrument	Digital voltmeter
Adjusting Elemtnt	CT121
Specified Value	2.5 ± 0.2 Vdc

Preparation:
1) Remove CD-60 board from the lens block.

Adjusting method:
1) Adjust to 2.5 ± 0.2 Vdc with CT121.

8-2-7. PG CONT and VSUB Adjustment

1. PG CONT adjustment (VC-96 board)

Subject	Not needed
Measurement Point	Pin (A2) (PG CONT) of check point array
Measuring Instrument	Digital voltmeter
Adjustment page	F
Adjustment Address	13 (PG CONT)
Specified Value	(Voltage indicated by the imager) ± 0.1 Vdc

Adjusting method:
1) Select the page F and the address 13 with the adjustment remote controller.
2) Change the adjustment data to set the PG CONT voltage to (voltage indicated by the imager) ± 0.1 Vdc.
3) Change the adjustment address to store the adjustment data in the memory.

2. VSUB adjustment (VC-96 board)

Subject	Not needed
Measurement Point	Pin (B4) (V SUB) of check point array
Measuring Instrument	Digital voltmeter
Adjustment Page	F
Adjustment Address	12 (V SUB)
Specified Value	(Voltage indicated by the imager) Vdc ± 3 %

Adjusting method:
1) Change the adjustment data at page F address 12 using the adjustment remote controller to set the VSUB voltage to (voltage indicated by the imager) Vdc ± 3 %.
2) Change the adjustment address to store the adjustment data in the memory.

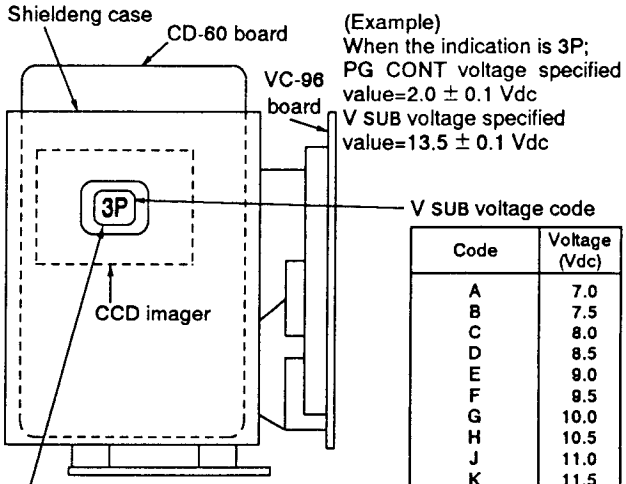

Code	Voltage (Vdc)
0	0.5
1	1.0
2	1.5
3	2.0
4	2.5
5	3.0
6	3.5
7	4.0

Code	Voltage (Vdc)
A	7.0
B	7.5
C	8.0
D	8.5
E	9.0
F	9.5
G	10.0
H	10.5
J	11.0
K	11.5
L	12.0
M	12.5
N	13.0
P	13.5
Q	14.0
R	14.5
S	15.0
T	15.5
U	16.0
V	16.5
W	17.0
X	17.5
Y	18.0
Z	18.5

Fig. 8-12.

For Service Manuals Contact
MAURITRON TECHNICAL SERVICES
8 Cherry Tree Rd, Chinnor
Oxon OX9 4QY
Tel:- 01844-351694 Fax:- 01844-352554
Email:- enquiries@mauritron.co.uk

8-2-8. Iris Adjustment (VC-96 Board)

Subject	Color bar chart standard picture frame
Filter	ND filter 0.4 and 0.1
Measurement Point	Pin (B11) (IRIS OUT) of check point array
Measuring Instrument	Oscilloscope
Adjustment Page	F
Adjustment Address	19 (Iris)
Specified Value	150 ± 10 mV

Adjusting method:

1) Select the page 5 and the address 00 with the adjustment remote controller, and set the data to 01.
2) Select the adjustment page F and the adjustment address 19.
3) Without attaching an ND filter, change the adjustment data with the adjustment remote controller to set the IRIS OUT signal level to 150 ± 10 mV.
4) Attach the ND filter 0.5 (0.4+0.1) to the front of the lens and confirm that there is a smooth change in the signal level.
5) Remove the ND filter and confirm that the signal level is 150 ± 20 mV.
6) Repeat 3) through 5) if the specified value is not met.
7) Change the adjustment address to store the adjustment data in the memory.

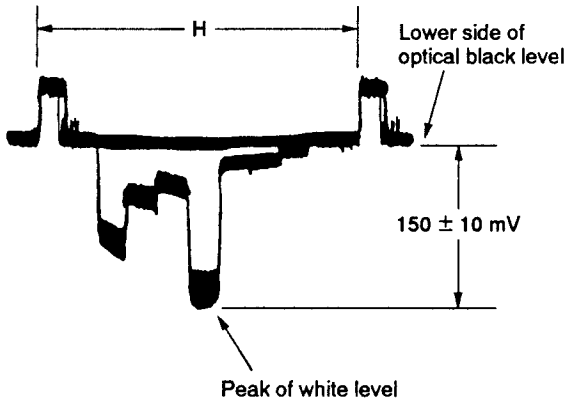

Fig. 8-13.

8-2-9. HALL Adjustment (VC-96 Board)

1. HALL Adjustment 1

Subject	White pattern standard picture frame
Measurement Point	CN655
Measuring Instrument	AF microcomputer data reading jig
Adjustment Page	F
Adjustment Address	87, 8B, 8A

Adjusting method:

1) Select the adjustment page F with the adjustment remote controller.
2) Select the adjustment address EB and set the adjustment data to 05. (HALL SENS level indication mode setting.)
   Select the adjustment address 1B and set the adjustment data to 20.
   Select the adjustment address 1C and set the adjustment data to 00.
3) Read the data indicated on the AF microcomputer data reading jig.
4) When the indicated data is over F8.
   1) Select the adjustment address 1C and change the adjustment data until the indication of AF microcomputer data reading jig is F8 ± 3.
   2) Read the data of adjustment address 1C, and enter adjustment address 87.

   When the indicated data is below F8.
   1) Select adjustment address 87 and set the adjustment data to 00.
5) Read the data (W_2) indicated on the AF microcomputer data reading jig, and enter adjustment address 8B.
6) Select adjustment address 1B and set the adjustment data to 00.
7) Read the data (W_1) indicated on the AF microproccssor data reading jig and enter adjustment address 8A.
8) Perform "HALL adjustment 2".

2. HALL Adjustment 2

Subject	All black (cover lens with black cap)
Measurement Point	CN655
Measuring Instrument	AF microcomputer data reading jig.
Adjustment Page	F
Adjustment Address	88, 89, 1B (HALL GAIN), 1C (HALL OFFSET)

Note: Perform "HALL adjustment 1" before this adjustment.

Adjusting method:

1) Read the data (K1) indicated on the AF microcomputer data reading jig, and enter adjustment address 88.
2) Select adjustment address 1B and set the adjustment data to 20.
3) Read the data (K2) indicated on the AF microcomputer data reading jig, and enter adjustment address 89.
4) Convert the adjustment data W1 (address 8A) to decimal to obtain W1′, the adjustment data W2 (address 8B) to decimal to obtain W2′, the adjustment data K1 to decimal to obtain K1′, and the adjustment data K2 to decimal to obtain K2′. (See table 8-4, Hexadecimal-decimal conversion table)
5) Obtain D′ by the following formula.

$$D' = \frac{(208+K1'-W1')\times \Delta K'+3\times \Delta W'}{\Delta K'+\Delta W'}$$

$$\left(\begin{array}{l}\Delta K' = K1'-K2' \\ \Delta W' = W2'-W1'\end{array}\right)$$

6) Convert D′ to hexadecimal and obtain D. (when converting, if there is a fraction under decimal, round it off.)
7) Select the adjustment address 1B and set the adjustment data to 00.
8) Select the adjustment address 1C, and change the adjustment data until the indication of AF microcomputer data reading jig is equal to D value.
9) Select the adjustment address 1B, and change the adjustment data until the indication of AF microcomputer data reading jig is 03.
10) Perform "HALL adjustment 3".

3. HALL Adjustment 3

Subject	White pattern stndard picture frame
Measurement Point	CN655
Measuring Instrument	AF microcomputer data reading jig.
Adjustment Page	F
Adjustment Address	1B (HALL GAIN), 1C (HALL OFFSET)

Note: Perform "HALL adjustment 2" before this adjustment.

Adjusting method:

1) Read the data (Wo) indicated on the AF microcomputer data reading jig.
2) When Wo value is from CF to D1, peform the adjustmnt after 15).
3) convert Wo to decimal to obtain Wo′.
4) Obtain E′ by the following formulla.

$$E' = \frac{(208\times \Delta K') + (Wo'\times \Delta W')}{\Delta K'+\Delta W'}$$

$$\left(\begin{array}{l}\Delta K' = K1'-K2' \\ \Delta W' = W2'-W1'\end{array}\right)$$

5) Convert E′ to hexadecimal and obtain E.
6) Select the adjustment address 1C, and change the adjustment data until the indication of AF microcomputer data reading jig is equal to E value.
7) When E value is equal to DO, perform the adjustment after 9).
8) Select the adjustment address 1B and change the adjustment data until the indication of AF microcomputer data reading jig is DO.
9) Cover the lens with black cap.
10) Read the data (Ko) indicated on the AF microcomputer data reading jig.
11) When Ko Value is from 01 to 05, perform the adjustment after 15).
12) Select the adjustment adress 1B and change the adjustment data until the indication of AF microcomputer data reading jig is 03.
13) Remove the black cap.
14) Comfirm that the indication of AF microcomputer data reading jig is from CF to D1.
15) Select the adjustment address EB and set the adjustment data to 00.
16) Change the adjustment address to store the adjustment data in the memory.

For Service Manuals Contact
MAURITRON TECHNICAL SERVICES
8 Cherry Tree Rd, Chinnor
Oxon OX9 4QY
Tel:- 01844-351694 Fax:- 01844-352554
Email:- enquiries@mauritron.co.uk

8-2-10. AGC Adjustment (VC-96 Board)

Subject	Color bar chart standard picture frame
Measurement Point	Pin (B3) (Y LPF OUT) of check point array
Measuring Instrument	Oscilloscope
Adjustment Page	F
Adjustment Address	1A (AGC)
Specified Value	180 ± 5 mV

Adjusting method:

1) Select the page 5 and the address 00 with the adjustment remote controller, and set the data to 01.
2) Select the adjustment page F and the adjustment address 1A.
3) Change the adjustment data with the adjustment remote controller to set the Y LPF signal level to 180 ± 5 mV.
4) Change the adjustment address to store the adjustment data in the memory.

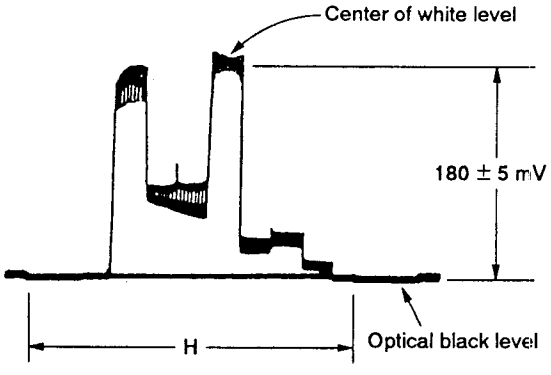

Fig. 8-14.

8-2-11. Matrix Adjustment (VC-96 Board)

1. Y_1 Gain Adjustment

Subject	Color bar chart standard picture frame
Measurement point	Pin (A5) (VAP OUT) of check point array
Measuring instrument	Oscilloscope
Adjustment page	F
Adjustment address	07 (Y_1 Gain)
Specified value	Y_0–Y_1=0 ± 5 mV

Preparation:

1) Connect Pin (B8) (Y_2 GAIN) of check point array and GND with a jumper wire.
2) Connect Pin (B5) (VAP SLICE) of check point array and GND with a jumper wire.

Adjusting Method:

1) Select the adjustment page F with the adjustment remote controller.
2) Select the adjustment address 0F with the adjustment remote controller and set the adjustment data to 00.
   (VAP GAIN: MAX)
3) Select the adjustment address 07.
4) Change the adjustment data and set the Y_0–Y_1 waveform to be a straight line. (There should not be difference.)
5) Change the adjustment address to store the adjustment data in the memory.
6) Remove the jumper wires.
7) Perform "Y_2 Gain adjustment."

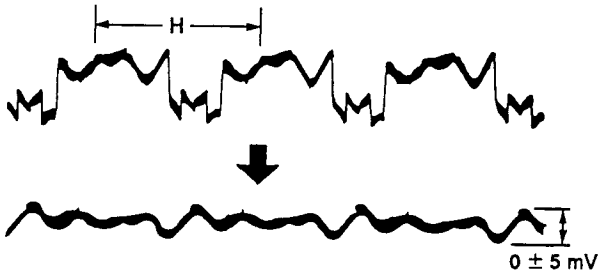

Fig. 8-15.

For Service Manuals Contact
MAURITRON TECHNICAL SERVICES
8 Cherry Tree Rd, Chinnor
Oxon OX9 4QY
Tel:- 01844-351694 Fax:- 01844-352554
Email:- enquiries@mauritron.co.uk

2. Y_2 Gain Adjustment

Subject	Color bar chart standard picture frame
Measurement point	Pin(A5)(VAP OUT) of check point array
Measuring instrument	Oscilloscope
Adjustment page	F
Adjustment address	06 (Y_2 GAIN)
Specified value	$Y_1 - \frac{Y_0+Y_2}{2} = 0 \pm 5$ mV

Preparation:

1) Connect pin (B5) (VAP SLICE) of check point array and GND with a jumper wire.

Adjusting Method:

1) Select the adjustment page F with the adjustment remote controller.
2) Select the adjustment address 0F with the adjustment remote controller and set the adjustment data to 00. (VAP GAIN: MAX)
3) Select the adjustment address 06.
4) Change the adjustment data and set the $(Y_1 - \frac{Y_0+Y_2}{2})$ waveform to be a straight line. (There should not be difference.)
5) Select the adjustment address 0F with the adjustment remote controller and set the adjustment data to 90.
6) Change the adjustment address to store the adjustment data in the memory.
7) Remove the jumper wire.

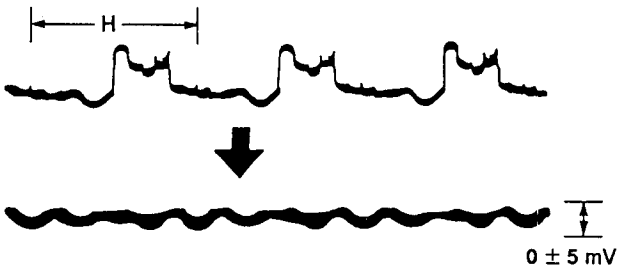

Fig. 8-16.

8-2-12. Y_H Level Adjustment (VC-96 Board)

Subject	Color bar chart standard picture frame
Measurement point	Pin(A6)(TP) of check point array
Measuring instrument	Oscilloscope
Adjustment page	F
Adjustment address	08 (Y_H GAIN)
Specified value	0 ± 5 mV

Adjusting Method:

1) Select the page 5 and the address 00 with the adjustment remote controller and set the data to 01.
2) Select the adjustment page F and the adjustment address 08.
3) Change the adjustment data with the adjustment remote controller and set the waveform to be straight line. (There should not be difference)
4) Change the adjustment address to store the adjustment data in the memory.

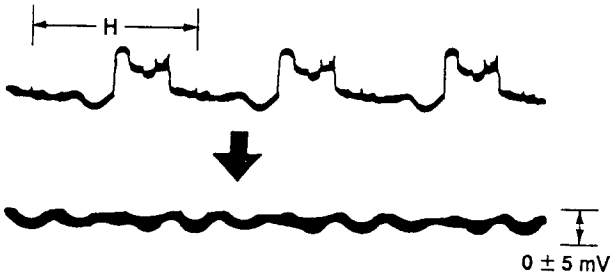

Fig. 8-17.

For Service Manuals Contact
MAURITRON TECHNICAL SERVICES
8 Cherry Tree Rd, Chinnor
Oxon OX9 4QY
Tel:- 01844-351694 Fax:- 01844-352554
Email:- enquiries@mauritron.co.uk

8-2-13. C1 Gain Adjustment (VC-96 Board)

Subject	Color bar standard picture frame
Measurement Point	CH1(X): pin ㉚ of MX-10 board (B-Y) CH2(Y): pin ㉛ of MX-10 board (R-Y)
Measuring Instrument	Oscilloscope (X-Y mode)
Adjustment Page	F
Adjustment Address	03 (C1 GAIN)
Specified Value	Separate color luminance points become one.

Adjusting method:

1) Select the page 5 and the address 00 with the adjustment remote controller and set the data to 01.
2) Select the adjustment page F and the adjustment address 03.
3) Change the adjustment data so that the two separate color luminance points become one respectively.
4) Change the adjustment address to store the adjustment data in the memory.

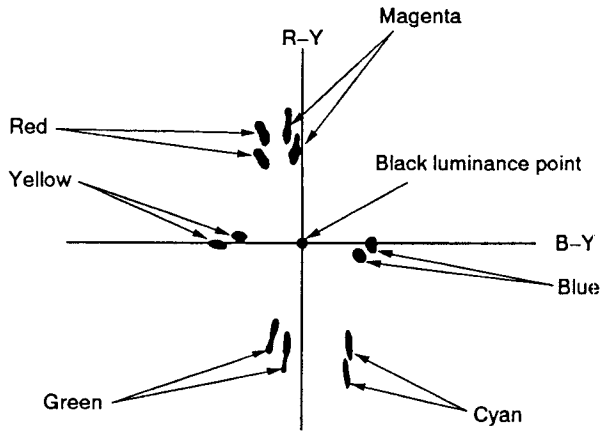

Fig. 8-18.

8-2-14. Sync Level Adjustment (VC-96 Board)

Subject	All black (cover lens with black cap)
Measurement Point	Pin (A8) (CAM Y) of check point array or pin ① (Y OUT) of CN307
Measuring Instrument	Oscilloscope
Adjustment Page	F
Adjustment Address	16 (SYNC LEVEL)
Specified Value	150 ± 5 mVp-p

Adjusting method:

1) Select the adjustment page F and the adjustment address 16 with the adjustment remote controller.
2) Change the adjustment data with the adjustment remote controller to set the sync level to 150 ± 5 mVp-p.
3) Change the adjustment address to store the adjustment data in the memory.

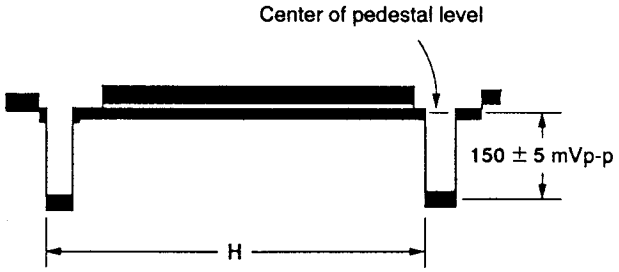

Fig. 8-19.

For Service Manuals Contact
MAURITRON TECHNICAL SERVICES
8 Cherry Tree Rd, Chinnor
Oxon OX9 4QY
Tel:- 01844-351694 Fax:- 01844-352554
Email:- enquiries@mauritron.co.uk

8-2-15. Setup Adjustment (VC-96 Board)

Subject	All black (cover lens with black cap)
Measurement Point	Pin (A8) (CAM Y) of check point array or pin ① (Y OUT) of CN307
Measuring Instrument	Oscilloscope
Adjustment Page	F
Adjustment Address	10 (SET UP)
Specified Value	15 ± 5 mV

Note: 1) and 2) are steps taken to reduce noise.

Adjusting method:

1) Select the adjustment page F and the address 0D (SHP LEVEL) with the adjustment remote controller, and enter FF as the adjustment data after making a note of the adjustment data for this address.
2) Set the address 18 (MAX GAIN) with the adjustment remote controller, and enter 00 as the adjustment data after making a note of the adjustment data for this address.
3) Set the adjustment address to 10 with the adjustment remote controller.
4) Change the adjustment data with the adjustment remote controller to set the setup level to 15 ± 5 mV.
5) Set the adjustment address to 0D and enter the adjustment data recorded in 1).
6) Set the adjustment address to 18 and enter the adjustment data recorded in 2).
7) Change the adjustment address to store the adjustment data in the memory.

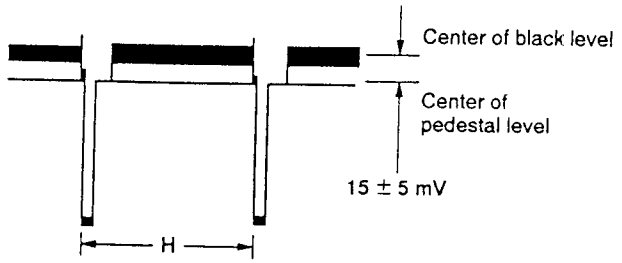

Fig. 8-20.

8-2-16. White Clip Adjustment (VC-96 Board)

Subject	Color var chart standard picture frame
Measurement Point	Pin (A8) (CAM Y) of check point array or pin ① (Y OUT) of CN307
Measuring Instrument	Oscilloscope
Adjustment Page	F
Adjustment Address	15 (WHITE CLIP)
Specified Value	420 ± 10 mV

Adjusting method:

1) Select the adjustment page F and the adjustment address 0E with the adjustment remote controller, and make a note of the adjustment data for this address.
2) Set the adjustment data to FF with the adjustment remote controller. (Y level is maximum.)
3) Set the adjustment address to 15 with the adjustment remote controller.
4) Change the adjustment data with the adjustment remote controller to set the white clip level to 420 ± 10 mV.
5) Set the adjustment address to 0E and enter the adjustment data recorded in 1).
6) Change the adjustment address to store the adjustment data in the memory.

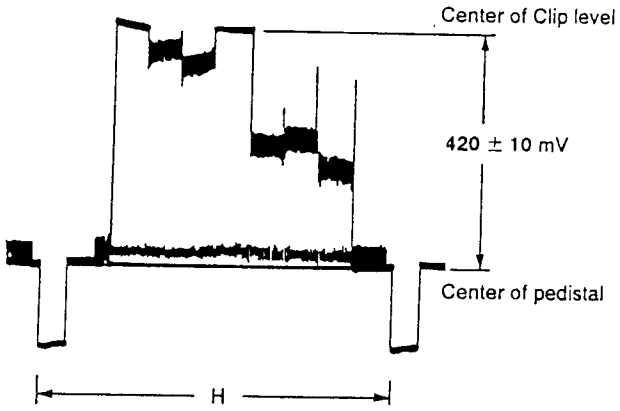

Fig. 8-21.

For Service Manuals Contact
MAURITRON TECHNICAL SERVICES
8 Cherry Tree Rd, Chinnor
Oxon OX9 4QY
Tel:- 01844-351694 Fax:- 01844-352554
Email:- enquiries@mauritron.co.uk

8-2-17. Y Level Adjustment (VC-96 Board)

Subject	Color bar chart standard picture frame
Measurement Point	Pin (A8)(CAM Y) of check point array or pin ① (Y OUT) of CN307
Measuring Instrument	Oscilloscope
Adjustment Page	F
Adjustment Address	0E (Y LEVEL)
Specified Value	330 ± 5 mV

Adjusting method:

1) Select the page 5 and the address 00 with the adjustment remote controller and set the data to 01.
2) Select the adjustment page F and the adjustment address 0E.
3) Change the adjustment data with the adjustment remote controller to set the Y signal level to 330 ± 5 mV.
4) Change the adjustment address to store the adjustment data in the memory.

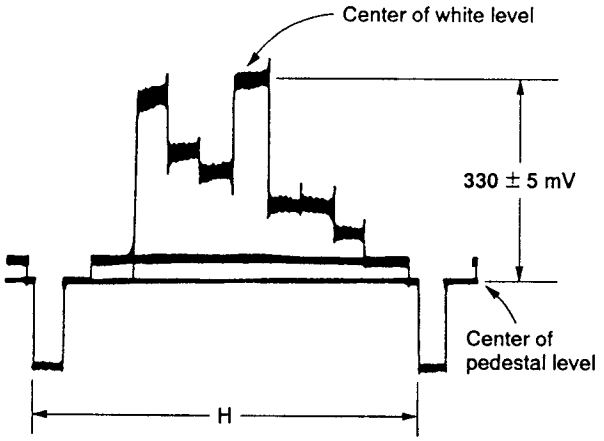

Fig. 8-22.

8-2-18. Max. Gain Adjustment (VC-96 Board)

Subject	Color bar chart standard picture frame
Filter	ND filters 1.0 (two) and 0.3 (two)
Measurement Point	Pin (A8)(CAM Y) of check point array or pin ① (Y OUT) of CN307
Measuring Instrument	Oscilloscope
Adjustment Page	F
Adjustment Address	18 (MAX GAIN)
Specified Value	150 ± 5 mV

Adjusting method:

1) Cover the lens with the ND filter 2.6 (1.0+1.0+0.3+0.3).
2) Select the adjustment page F and the adjustment address 18 with the adjustment remote controller.
3) Change the adjustment data with the adjustment remote controller to set the Y signal level to 150 ± 5 mV.
4) Change the adjustment address to store the adjustment data in the memory.

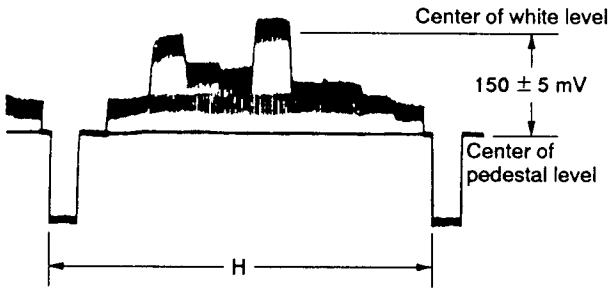

Fig. 8-23.

For Service Manuals Contact
MAURITRON TECHNICAL SERVICES
8 Cherry Tree Rd, Chinnor
Oxon OX9 4QY
Tel:- 01844-351694 Fax:- 01844-352554
Email:- enquiries@mauritron.co.uk

8-2-19. H Aperture Adjustment (VC-96 Board)

Subject	Color bar chart standard picture frame
Measurement Point	Pin ① (Y OUT) of CN307
Measuring Instrument	Oscilloscope
Adjustment Page	F
Adjustment Address	0D (SHP LEVEL)
Specified Value	60 ± 5 mV

Adjusting method:

1) Focus the camera and set the aperture level (lower peak between green and white) to maximum.
2) Select the page 5 and address 00 with the adjustment remote controller and set the data to 01.
3) Select the adjustment page F and the adjustment address 0D.
4) Change the adjustment data to set the lower peak between green and white to 60 ± 5 mV.
5) Change the adjustment address to store the adjustment data in the memory.

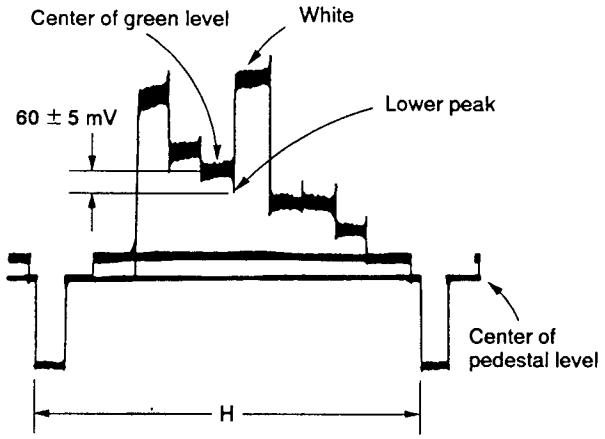

Fig. 8-24.

For Service Manuals Contact
MAURITRON TECHNICAL SERVICES
8 Cherry Tree Rd, Chinnor
Oxon OX9 4QY
Tel:- 01844-351694 Fax:- 01844-352554
Email:- enquiries@mauritron.co.uk

8-2-20. Chroma Level Adjustment (VC-96 Board)

Subject	Color bar chart standard picture frame
Measurement point	Pin (A7) (WB-G) of check point array
Measuring instrument	Oscilloscope
Adjustment page	F
Adjustment address	11 (C LEVEL)
Specified value	320 ± 20 mV

Adjusting method:

1) Select the page 5 and the address 00 with the adjustment remote controlle and set the data to 01
2) Select the adjustment page F and the adjustment address 11.
3) Change the adjustment data with the adjustment remote controller to set the WB-G signal level to 320 ± 20 mV.
4) Change the adjustment address to store the adjustment data in the memory.

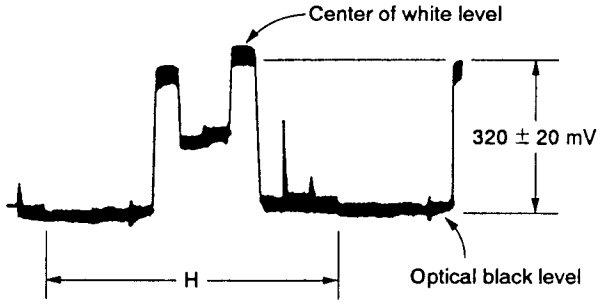

Fig. 8-25.

8-2-21. Burst Level Adjustment (VC-96 Board)

Subject	All black (cover lens with black cap)
Measurement Point	Pin (A10) (CAM C) of check point array or pin ③ (C OUT) of CN307
Measuring Instrument	Oscilloscope
Adjustment Page	F
Adjustment Address	17 (BURST LEVEL)
Specified Value	150 ± 5 mVp-p

Adjusting method:

1) Select the adjustment page F and the adjustment address 17 with the adjustment remote controller.
2) Change the adjustment data with the adjustment remote controller to set the burst level to 150 ± 5 mVp-p.
3) Change the adjustment address to store the adjustment data in the memory.

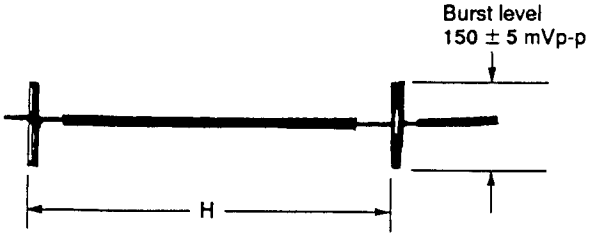

Fig. 8-26.

8-2-22. Burst Phase Check

Subject	All black (cover lens with black cap)
Measurement Point	VIDEO output terminal
Measuring Instrument	Vectorscope
Specified Value	135° ± 2°

Checking method:

1) Confirm that the burst luminance point phase is 135° ± 2°.

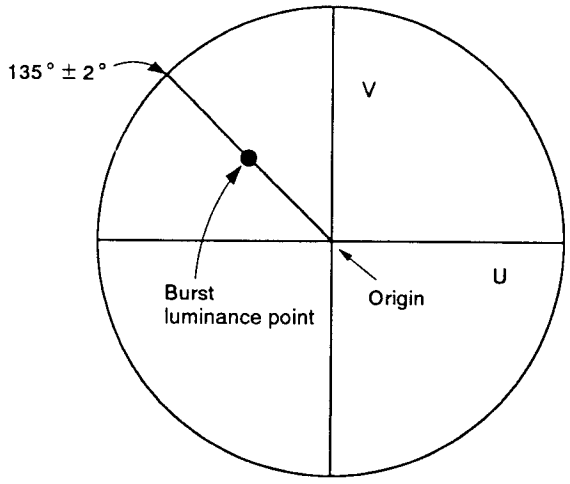

Fig. 8-27.

8-2-23. Pre- White Balance Adjustment (Method Using Vectorscope)

Subject	White pattern standard picture frame
Measurement Point	Video output terminal
Measuring Instrument	Vectorscope
Adjustment Page	F
Adjustment Address	05 (R GAIN) 04 (B GAIN)
Specified Value	The center of the white luminance point is within a circle with a diameter of 1 mm centered around the origin.

Adjusting method:

1) Select the adjustment page F and the adjustment address 05 with the adjustment remote controller.
2) Change the adjustment data with the adjustment remote controller to match the white luminance point with the origin.
3) Set the adjustment address to 04.
4) Change the adjustment data to match the white luminance point with the origin.
5) Repeat steps 1) through 4).
6) Change the adjustment address to store the adjustment data in the memory.

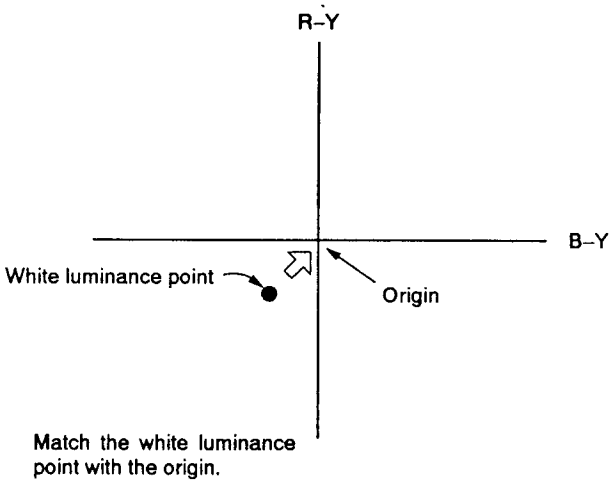

Fig. 8-28.

For Service Manuals Contact
MAURITRON TECHNICAL SERVICES
8 Cherry Tree Rd, Chinnor
Oxon OX9 4QY
Tel:- 01844-351694 Fax:- 01844-352554
Email:- enquiries@mauritron.co.uk

8-2-24. Pre- White Balance Adjustment (Method Using Oscilloscope) (VC-96 Board)

Subject	White pattern standard picture frame
Measurement Point	Pin (A10) (CAM C) of check point array or pin ③ (C OUT) of CN307
Measuring Instrument	Oscilloscope
Adjustment Page	F
Adjustment Address	05 (R GAIN) 04 (B GAIN)
Specified Value	Minimum chroma signal amplitude.

Adjusting method:

1) Select the adjustment page F and the adjustment address to 05 with the adjustment remote controller.
2) Change the adjustment data with the adjustment remote controller to minimize the chroma signal amplitude.
3) Set the adjustment address to 04.
4) Change the adjustment data to minimize the croma signal amplitude.
5) Repeat steps 1) through 4).
6) Change the adjustment address to store the adjustment data in the memory.

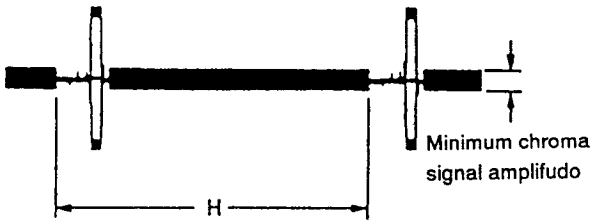

Fig. 8-29.

For Service Manuals Contact
MAURITRON TECHNICAL SERVICES
8 Cherry Tree Rd, Chinnor
Oxon OX9 4QY
Tel:- 01844-351694 Fax:- 01844-352554
Email:- enquiries@mauritron.co.uk

8-2-25. Color Reproduction Adjustment (Method Using Vectorscope)

Subject	Color bar chart standard picture frame
Measurement Point	Video output terminal
Measuring Instrument	Vectorscope
Adjustment Page	F
Adjustment Address	09 (R–Y GAIN) 0A (B–Y GAIN) 0B (R–Y HUE) 0C (B–Y HUE)
Specified Value	All color luminance points are within color reproduction frame. (⊞)

Note: Confirm that "Burst Level Adjustment" and "Pre- White Balance Adjustment" have been completed.

Adjusting method:

1) Adjust the phase and gain of the vectorscope to set the burst luminance points to the designated position on the color reproduction frame.
2) Select the page 5 and the address 00 with the adjustment remote controller and set the data to 01.
3) Select the adjustment page F.
4) Change the adjustment data at the various adjustment addresses using the adjustment remote controller until all color luminance points are within the color reproduction frame (⊞).
5) Change the adjustment address to store the adjustment data in the memory.

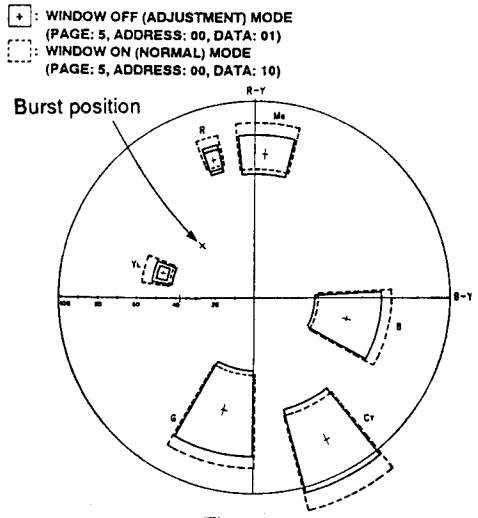

Fig. 8-30.

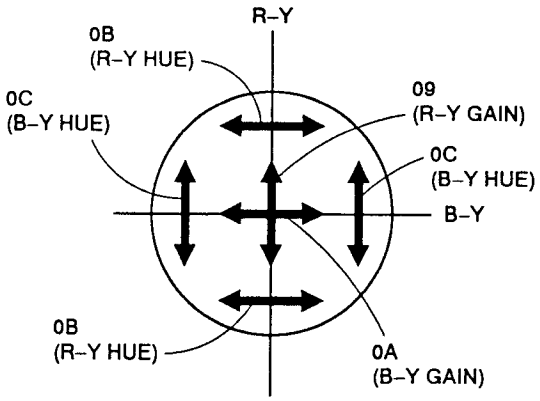

Fig. 8-31. Adjustment address and direction of luminance point movement

For Service Manuals Contact
MAURITRON TECHNICAL SERVICES
8 Cherry Tree Rd, Chinnor
Oxon OX9 4QY
Tel:- 01844-351694 Fax:- 01844-352554
Email:- enquiries@mauritron.co.uk

8-2-26. Color Reproduction Adjustment (Method Using Oscilloscope)

Preeparation:

1) Select the page 5 and the address 00 with the adjustment remote controller and set the data to 01.

1. Gain adjustment (VC-96 board)

Subject	Color bar chart standard picture frame
Measurement Point	Pin (A10) (CAM C) of check point array or pin ③ (C OUT) of CN307
Measuring Instrument	Oscilloscope
Adjustment Page	F
Adjustment Address	09 (R–Y GAIN) 0A (B–Y GAIN)
Specified Value	Red level: 291 ± 20 mVp-p Yellow level: 191 ± 12 mVp-p

Note: Confirm that "Indoor White Balance Adjustment" is completed.

Adjusting method:

1) Select the adjustment page F with the adjustment remote controller.
2) Set the adjustment address to 0A with the adjustment remote controller and set the adjustment data to 90.
3) Set the adjustment address to 0B and set the adjustment data to 80.
4) Set the adjustment address to 0C and set the adjustment data to 50.
5) Set the adjustment address to 09 and change the adjustment data to set the chroma signal "red" level to 291 ± 20 mVp-p.
6) Set the adjustment address to 0A and change the adjustment data to set the chroma signal "yellow" level to 191 ± 12 mVp-p.
7) Repeat steps 5) and 6).
8) Change the adjustment address to store the adjustment data in the memory.
9) Perform "Hue Adjustment".

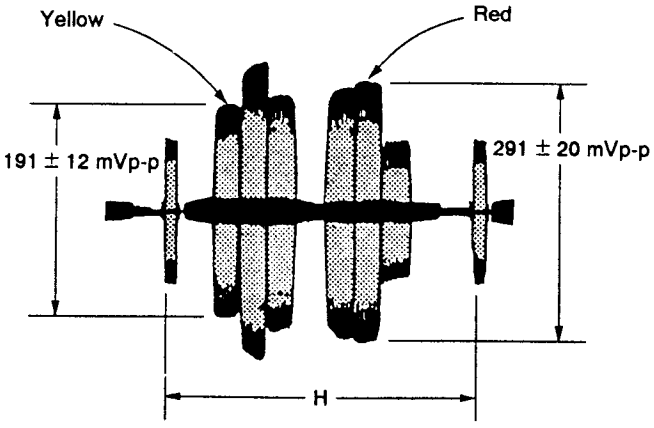

Fig. 8-32.

2. Hue adjustment (VC-96 board)

Subject	Color bar chart standard picture frame
Measurement Point	CH1(X): Pin ㉚ of MX-10 board (B–Y) CH2(Y): Pin ㉛ of MX-10 board (R–Y)
Measuring Instrument	Oscilloscope (X-Y mode)
Adjustment Page	F
Adjustment Address	0B (R–Y HUE) 0C (B–Y HUE)
Specified Value	Various color luminance points within color reproduction frame.

Note: Make sure that "Indoor White Balance Adjustment" is completed.

Adjusting method:

1) Match the "black" luminance point on the oscilloscope with the origin of the color reproduction frame.
2) Select the adjustment page F with the adjustment remote controller.
3) Change the adjustment data at adjustment addresses 0B and 0C with the adjustment remote controller to bring the various color luminance points into the color reproduction frame.
4) Check the hue reproduced on the monitor TV and fine adjust the adjustment data at adjustment addresses 0B and 0C if necessary.
5) Set the oscilloscope to the normal mode and connect it to Pin ③ of CN307 and confirm that the specified value of "1. Gain Adjustment" is satisfied. Change the data at the adjustment address 09 and 0A if the specified value is not met.
6) Change the adjustment address to store the adjustment data in the memory.

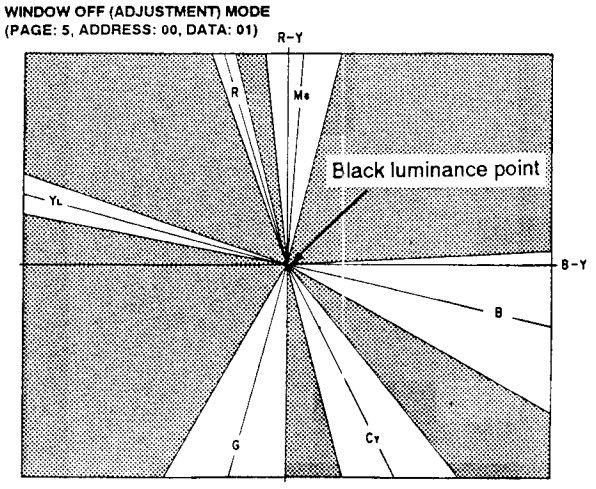

Fig. 8-33.

For Service Manuals Contact
MAURITRON TECHNICAL SERVICES
8 Cherry Tree Rd, Chinnor
Oxon OX9 4QY
Tel:- 01844-351694 Fax:- 01844-352554
Email:- enquiries@mauritron.co.uk

8-2-27. AE OFFSET adjustment (VC-96 board)

Subject	All back (Cover lens with a black cap.)
Measurement point	CN655
Measuring instrument	AF microcomputer data reading jig
Adjustment page	F
Adjustment address	1E (AE OFFSET)
Specified value	Minimum value of 01 to 06

Adjusting Method:

1) Select adjustment page F and address EB with the adjustment remote controller, and set the adjustment data to 13.
   (IRIS CONT level indication mode setting.)
2) Select the adjustment address 1E.
3) Change the adjustment data until the indication on the AF microcomputer data reading jig is the minimum value in the range of 01 to 06.
4) Read the data (D_1) indicated on the AF microcomputer data reading jig.
5) Change the adjustment address to store the adjustment data in the memory.
6) Perform "Standard AE level and Program AE level adjustment."

8-2-28. Standard AE level and Program AE level adjustment (VC-96 board)

Subject	Color bar chart standard picture frame
Measurement point	CN655
Measuring instrument	AF microcomputer data reading jig
Adjustment page	F
Adjustment address	60 (IRIS REF NOR) 61 (IRIS REF PO) 62 (IRIS REF SP)
Specified value	D_{60}–$D_1 \geqq 59$

Note: Perform "AE OFFSET adjustment" before this adjustment to obtain D_1.

Adjusting method:

1) Select the page 5 and the address 00 with the adjustment remote controller, and set the data to 01.
2) Select the adjustment page F and the adjustment address 60.
3) Read the indication on the AF microcomputer data reading jig and enter this data (D_{60}) into the adjustment address 60. (D_{60}–$D_1 \geqq 59$)
4) Convert D_{60} to decimal to obtain D_{60}'.
5) Obtain D_{61}' and D_{62}' by the following formula.
   $D_{61}'=D_{60}'-12$
   $D_{62}'=D_{60}'-12$
6) Convert D_{61}' and D_{62}' to hexadecimal and call respect values D_{61} and D_{62}.
7) Select the adjustment address 61 and 62, and enter the adjustment data D_{61} and D_{62} into respective addresses.
8) Change the adjustment address to store the adjustment data in the memory.

For Service Manuals Contact
MAURITRON TECHNICAL SERVICES
8 Cherry Tree Rd, Chinnor
Oxon OX9 4QY
Tel:- 01844-351694 Fax:- 01844-352554
Email:- enquiries@mauritron.co.uk

8-2-29. Auto White Balance Adjustment

Note: Be sure to first perform "Preset Adjustment" followed by "Auto White Balance Adjustment".

1. Preset adjustment (VC-96 board)

Subject	White pattern standard picture frame
Adjustment page	F
Adjustment address	90 (R3200 MSB), 91 (R3200 LSB) 92 (B3200 MSB), 93 (B3200 LSB) 94 (G3200 MSB), 95 (G3200 LSB)

Adjusting method:

1) Select the page 5 and the address 00 with the adjustment remote controller after turning the power OFF and ON, and set the data to 01.
2) Turn off the auto focus with FOCUS button, and wait at least for 5 seconds.
3) Select the adjustment page F and the adjustment address EE and set the adjustment data to 01. (3200k data fetch 1 mode setting)
4) Change the adjustment address to store 3200k data 1.
5) Select the adjustment address EE and set the adjustment data to 23. (3200K data fetch 2 mode setting)
6) Change the adjustment address to store 3200k data 2.
7) Confirm that the indicated data on the adjustment remote controller is changed, and that the indicated address is 95.
8) Select the adjustment address EE and set the adjustment data to 00.
9) Perform the following "Auto white balance adjustment".

2. Auto white balance adjustment

Subject	White pattern standard picture frame
Filter	Filter C14 for color temperature correction
Measuring instrument	Vectorscope
Measuring point	VIDEO IN/OUT terminal
Adjustment page	F
Adjustment address	01 (R CONT), 02 (B CONT)

Adjusting method:

1) Select the adjustment address EE and set the adjustment data to DO with the adjustment remote controller.
   (WB DIRECT mode setting)
2) Cover the lans with C14 filter.
3) Change the adjustment data at the adjustment addresses 01 and 02 alternately with the adjustment remote controller to match the white luminance point with the specified point.
4) Select the adjustment address EE and set the adjustment data to 00.
5) Change the adjustment address to store the adjustment data in the memory.
6) Set HOLD switch of the adjustment remote controller to the off position and then set to the on position.

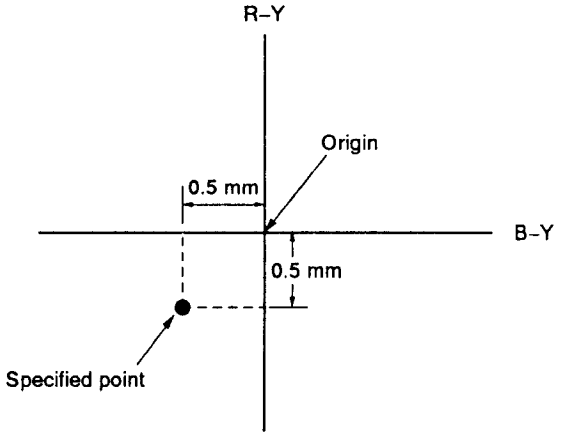

Fig. 8-34.

For Service Manuals Contact
MAURITRON TECHNICAL SERVICES
8 Cherry Tree Rd, Chinnor
Oxon OX9 4QY
Tel:- 01844-351694 Fax:- 01844-352554
Email:- enquiries@mauritron.co.uk

8-2-30. SHUTTER IN/OUT Adjustment (VC-96 Board)

Subject	White pattern standard picture frame
Filter	ND filter 0.4 and 0.1
Measuring point	CN655
Measuring instrument	AF microcomputer data reading jig.
Adjustment page	F
Adjustment address	97 (SHUTTER OUT) 96 (SHUTTER IN)

Adjusting method:

1) Select the page 5 and the address 00 and set the data 01 with the adjustment remote controller.
2) Select the adjustment address EB and set the adjustment data to 11.
   (Shutter data indication mode setting)
3) Change the adjustment address.
4) Set the shutter speed to 1/2000 with SHUTTER SPEED button.
5) Set up the portrait mode ( ) with PROGRAM AE button.
6) Cover the lens with ND filter 0.5 (0.4+0.1), and wait for 2 seconds.
7) Read the data (D_{97}) indicated on the AF microcomputer data reading jig and enter adjustment address 97.
   (D_{97} shold be 61 to 81.)
8) Convert D_{97} to decimal to obtain D_{97}'.
9) Obtain D_{96}' by the following formulla.
   $D_{96}'=D_{97}'+10$
10) Convert D_{96}' to hexadecimal, and enter it into the adjustment address 96.
11) Cover the lens and ND filter 0.5 with black cap, and wait for 2 seconds.
12) Confirm that the data indicated on the AF microcomputer data reading jig is FF.
13) Select the adjustment address EB and set the adjustment data to 00.
14) Change the adjustment address to store the adjustment data in the memory.

8-2-31. Indoor White Balance Check (VC-96 Board)

Subject	White pattern standard picture frame
Measurment Point	VIDEO OUT terminal
Measuring Instrument	Vectorscope

Preparation:

1) Set HOLD switch of the adjustment remote controller to the off position.

Checking method:

1) Press the white balance button to select the indoor white balance mode. (mark is displayed on LCD.)
2) Confirm that the center of the white luminance point is within the standard circle.

   Note: When using a vectorscope, adjust the gain and phase of the vectorscope so that burst luminance point moves to the burst position of the color reproduction frame.

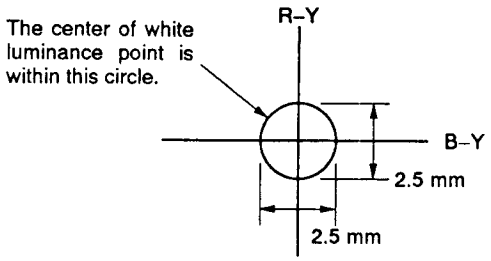

Fig. 8-35.

For Service Manuals Contact
MAURITRON TECHNICAL SERVICES
8 Cherry Tree Rd, Chinnor
Oxon OX9 4QY
Tel:- 01844-351694 Fax:- 01844-352554
Email:- enquiries@mauritron.co.uk

8-2-32. Outdoor White Balance Check (VC-96 Board)

Subject	White pattern standard picture frame
Filter	Filter C14 for color temperature correction
Measurement Point	VIDEO OUT terminal
Measuring Instrument	Vector scope

Preparation:

1) Set HOLD switch of the adjustment remote controller to the off position.

Checking method:

1) Cover the lens with the C14 filter for color temperature correction.
2) Press the white balance button to select the outdoor white balance mode. (☀ mark is displayed on LCD.)
3) Confirm that the center of the white luminance point is within the standard circle.

Note: When using a vectorscope, adjust the gain and phase of the vectorscope so that burst luminance point moves to the burst position of the color reproduction frame.

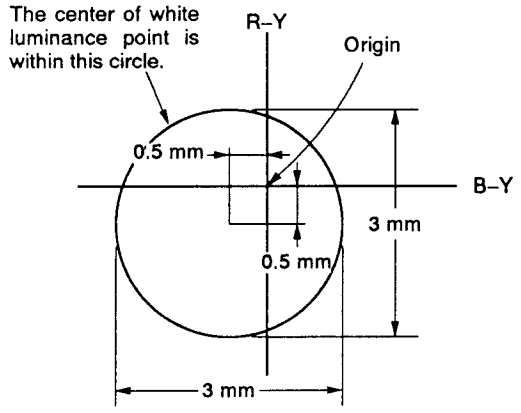

Fig. 8-.36.

8-2-33. Auto White Balance Check (VC-96 Board)

Subject	White pattern standard picture frame
Filter	Filter C14 for color temperature correction ND filters 1.0 and 0.3
Measurement point	VIDEO OUT terminal
Measuring instrument	Vectorscope

Checking method:

1) Select the adjustment page F and the adjustment address EC with the adjustment remote controller and set the adjustment data to 02. (Auto white balance check mode setting)
2) Change the adjustment address to store the adjustment data in the memory.
3) Set HOLD switch of the adjustment remote controller to the off position.
4) Set the white balance to the auto white balance mode.
5) Cover the lens with the C14 filter and confirm that the white luminance point matches with the origin in about 5 seconds.
6) Confirm that the white luminance point is within the circle 1.
7) Remove the C14 filter.
8) Cover the lens with ND filter 1.3 (1.0+0.3) and wait for 5 seconds.
9) Confirm that the white luminance point is within the circle 2.
10) Set HOLD swith of the adjustment remote controller to the on position.
11) Select the adjustment page F and the adjustment address EC and set the adjustment data to 01.
12) Change the adjustment address to store the adjustment data in the memory.

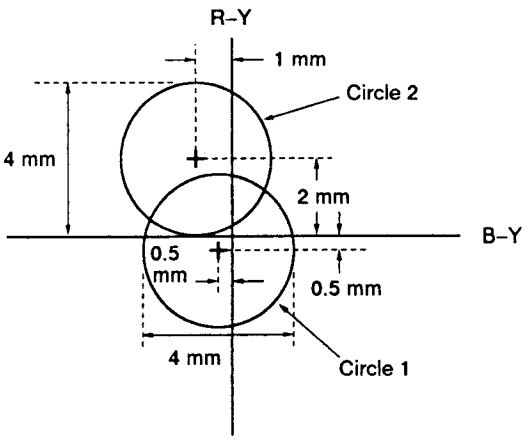

Fig. 8-37.

8-3. DIGITAL TITLER SYSTEM ADJUSTMENT

Preparations:
Open the cabinet (with the camera and video blocks connected state).

1. Open the VC-96 board.
2. Connect 12-pin extension cord between CN305 on the VC-96 board and W702 on the VA-70 board.
3. Connect 4-pin extension cord between CN307 on the VC-96 board and W701 on the VA-70 board.
4. Open the VA-70 board.
5. Open the CT-40 board.
6. Connect 20-pin extension cord between CN705 on the CT-40 board and CN703 on the VA-70 board.

8-3-1. 4FSC Frequency Adjustment (CT-40 Board)

Mode	E-E
Signal	Non-signal
Measurement point	Emitter of Q707
Measuring instrument	Frequency counter
Adjustment element	CT702
Specified value	4433619 ± 50 Hz

Connection:

1) Connect Pin ⑲ of IC704 and Pin ⑰ of CN705 (VIDEO 4.9V) with a jumper wire.
2) Connect Pin ㉝ of IC704 and Pin ⑰ of CN705 with 10 kΩ resistor.
3) Connect Pin ㉝ of IC704 and GND with 22 kΩ resistor.

Adjusting Method:

1) Set POWER switch to VTR (PLAYER) position.
2) Set IN/OUT select switch to OUT position, when IN/OUT select switch is installed.
3) Adjust to 4433619 ± 50 Hz with CT702.
4) Set POWER switch to CAMERA position.

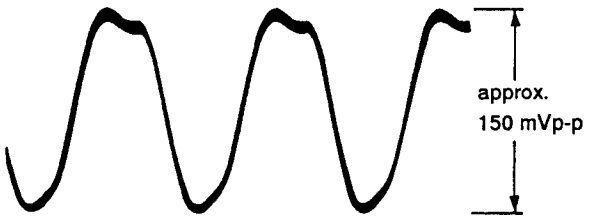

Fig. 8-38.

8-3-2. Controller Frequency Adjustment (CT-40 Board)

Subject	All white pattern
Measurement point	Pin ⑦ of IC707
Measuring instrument	Oscilloscope
Adjustment element	CT701
Specified value	1.5 ± 0.3 μsec

Adjusting Method:

1) Press DATA SCREEN button.
2) Press COLOR/MODE button untill **T** mark is displayed on the monitor TV screen.
3) Press TITLE 1 button.
4) Press MEMORY button.
5) Press COLOR/MODE button untill all white title is displayed on the monitor TV screen.
6) Adjust to 1.5 ± 0.3 μsec with CT701.

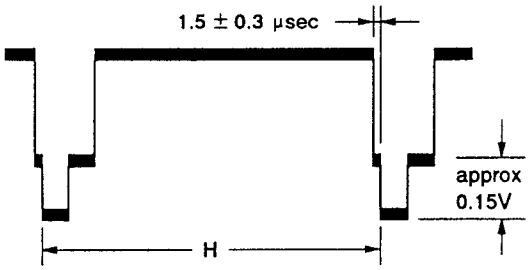

Fig. 8-39.

For Service Manuals Contact
MAURITRON TECHNICAL SERVICES
8 Cherry Tree Rd, Chinnor
Oxon OX9 4QY
Tel:- 01844-351694 Fax:- 01844-352554
Email:- enquiries@mauritron.co.uk

8-3-3. Title A/D Threashold Level Adjustment (CT-40 Board)

Mode	E-E
Measurement point	CH1: Pin ② of IC703 CH2: Pin ① of IC703
Measuring instrument	Oscilloscope (DC range, 0.2V/DIV)
Adjustment element	RV703
Specified value	0.215 ± 0.03V

Adjusting method:

1) Set POWER switch to VTR (PLAYER) position.
2) Input the staircase signal to Pin ⑨ of S201 pattern on VA-70 board.
3) Adjust the threashold level to 0.215V with RV703.
4) Disconnect the staircase signal.
5) Set POWER switch to CAMERA position.

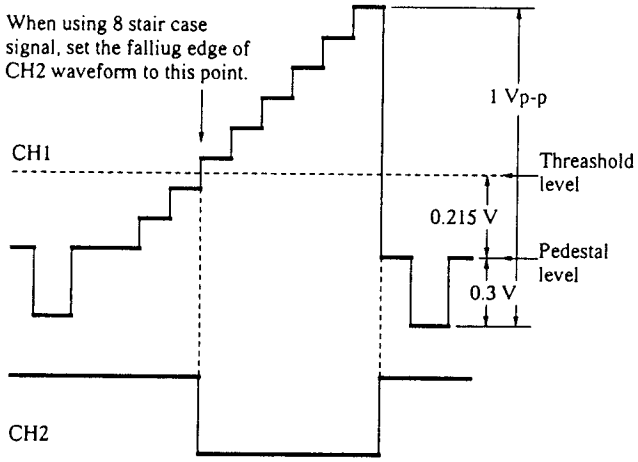

Fig. 8-40.

8-3-4. Title Chroma Phase Adjustment (CT-40 board)

Subject	All white pattern
Measurement point	VIDEO OUT terminal
Measuring instrument	Vertorscope
Adjustment element	RV702
Specified value	60° ± 2°

Adjusting Method:

1) Press DATA SCREEN button.
2) Press COLOR/MODE button untill **T** mark is displayed on the monitor TV screen.
3) Press TITLE 1 button.
4) Press MEMORY button.
5) Press COLOR/MODE button untill a magenta title displayed on the monitor TV screen.
6) Adjust the cyan luminance point to 60° ± 2° with RV702.

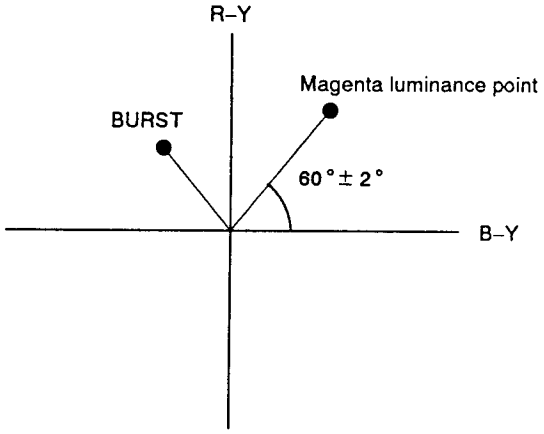

Fig. 8-41.

For Service Manuals Contact
MAURITRON TECHNICAL SERVICES
8 Cherry Tree Rd, Chinnor
Oxon OX9 4QY
Tel:- 01844-351694 Fax:- 01844-352554
Email:- enquiries@mauritron.co.uk

8-4. ELECTRONIC VIEWFINDER SYSTEM ADJUSTMENT (TYPE A) (VF-27 BOARD)

8-4-1. Horizontal Tilt Adjustment

Mode	Playback
Signal	Alignment tape for checking operation (WR5-5CSP) Monoscope portion
Specified Value	See Fig. 8-42.

Adjustment method:

1) By turning RV904 (BRIGHT), adjust for a luminance level which provides appropriate visibility of the CRT screen.
2) Loosen the DY (deflection yoke) tightening nut.
3) Make the image horizontal by rotating DY.
4) Retighten the DY tightening nut. (Do not tighten excessively.)

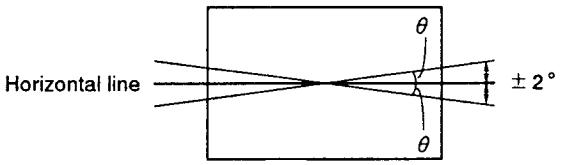

Specified value: Image orientation within ± 2° of horizontal line.

Fig. 8-42.

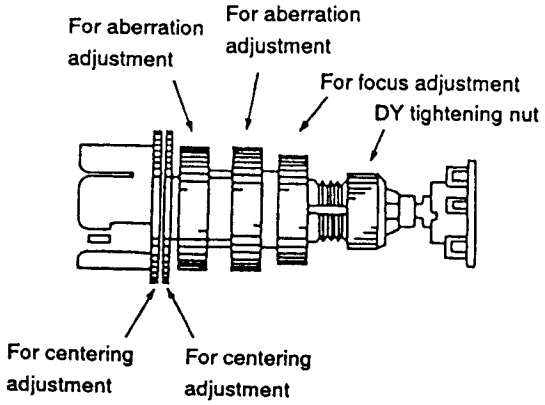

Fig. 8-43.

8-4-2. Centering Adjustment

Mode	Playback
Signal	Alignment tape for checking operation (WR5-5CSP) Monoscope portion
Specified Value	See Fig. 8-44.

Adjustment method:

1) Turn the centering adjustment rings to provide an image with even right, left, upper and lower margins. (See Fig. 8-44.)

Note: Since the centering position is affected by the earth magnetism, turn the equipment over 360° horizontally, and make adjustments at the orientation which exhibits median displacements of the image.

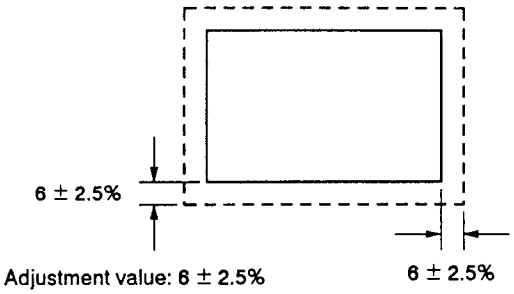

Fig. 8-44.

8-4-3. Focus Adjustment

Mode	Playback
Signal	Alignment tape for checking operation (WR5-5CSP) Monoscope portion

Adjustment method:

1) Adjust for optimum focus using the focus ring. (See Fig. 8-43.)

For Service Manuals Contact
MAURITRON TECHNICAL SERVICES
8 Cherry Tree Rd, Chinnor
Oxon OX9 4QY
Tel:- 01844-351694 Fax:- 01844-352554
Email:- enquiries@mauritron.co.uk

8-4-4. Aberration Adjustment

Mode	E–E
Signal	Dot pattern
Specified Value	See Fig. 8-45.

Adjustment method:

1) Use the aberration adjustment rings to adjust any trailing dots to within 2 times the dot diameter and any fan shaped aberrations to within the dot diameter.
2) If off center, repeat the Centering Adjustment.

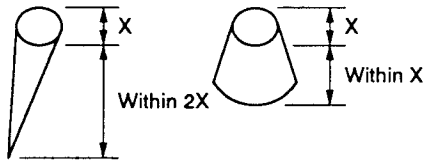

Fig. 8-45.

8-4-5. Horizontal Oscillation Frequency Adjustment (VF-27 Board)

Mode	Playback
Signal	Alignment tape for checking operation (WR5-5CSP)
Measurement Point	Pin ⑤ of CN904
Measuring Instrument	Digital voltmeter or oscilloscope (DC range)
Adjustment Element	RV901
Specified Value	2.60 ± 0.05 Vdc

Adjustment method:

1) Adjust to 2.60 ± 0.05 Vdc using RV901.

8-4-6. Horizontal Amplitude Adjustment (VF-27 Board)

Mode	Playback
Signal	Alignment tape for checking operation (WR5-5CSP) Monoscope portion
Adjustment Element	C911
Specified Value	6 ± 3.2%

Adjustment method:

1) Line up the upper and lower sections of the monoscope image with the upper and lower edges of the screen by rotating RV902.
2) Rotate RV904 to set the brightness to the normal level.
3) Short or open the pattern (A) of the H size adjustment capacitor (C911) to provide horizontal overscans of 6 ± 3.2% (total of left and right).
(See Fig. 8-46.)

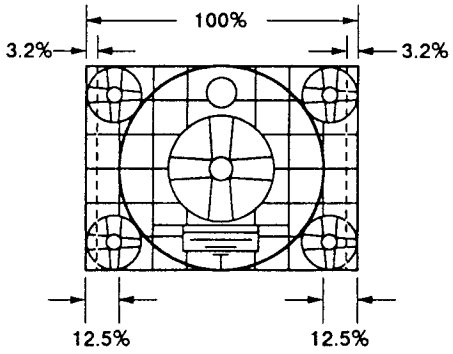

Fig. 8-46.

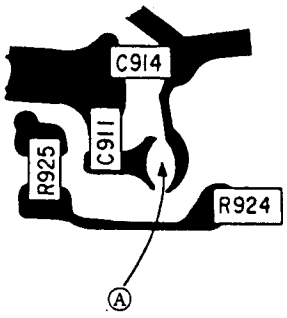

VF-27 Board
(conductor side)

A section	H size
Open	Large
Short	Small

Fig. 8-47.

For Service Manuals Contact
MAURITRON TECHNICAL SERVICES
8 Cherry Tree Rd, Chinnor
Oxon OX9 4QY
Tel:- 01844-351694 Fax:- 01844-352554
Email:- enquiries@mauritron.co.uk

8-4-7. Vertical Amplitude Adjustment (VF-27 Board)

Mode	Playback
Signal	Alignment tape for checking operation (WR5-5CSP) Monoscope portion
Adjustment Element	RV902
Specified Value	6 ± 3.2%

Adjustment method:

1) By turning RV902, adjust vertical overscan to 6 ± 3.2% (upper and lower total).

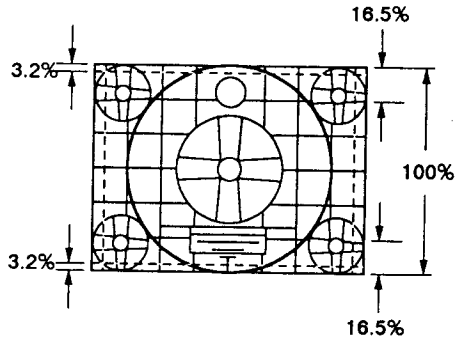

Fig. 8-48.

8-4-8. Brightness, Contrast Adjustments (VF-27 Board)

Mode	Playback
Signal	Alignment tape for checking operation (WR5-5CSP) Monoscope portion
Adjustment Element	Brightness: RV904 Contrast: RV903

Adjustment method:

1) Adjust RV904 and RV903 alternately until the bright and dark areas of a gray scale are displayed correctly. (The bright areas should not be made too bright to avoid a fuzzy display of the cross-hatches in the monoscope circle, and the brightness of the dark areas should be such that discrimination between the darkest and second darkest area is possible.)

8-4-9. Horizontal Amplitude, Vertical Amplitude and Focus Checks

Values should conform to specifications given in 8-4-6. Horizontal Amplitude Adjustment and 8-4-7. Vertical Amplitude Adjustment. If not, readjust accordingly, and repeat 8-4-8. Brightness, Contrast Adjustments. In this case, focus needs to be checked. If the image is not clear, perform 8-4-3. Focus Adjustment and 8-4-4. Aberration Adjustment.

8-5. ELECTRONIC VIEWFINDER SYSTEM ADJUSTMENT (TYPE B) (VF-26 BOARD)

8-5-1. Horizontal Tilt Adjustment

Mode	Playback
Signal	Alignment tape for checking operation (WR5-5CSP) Monoscope portion
Specified Value	See Fig. 8-50.

Adjustment method:

1) Adjust the volume array Ⓓ (BRIGHT) for appropriate brightness on CRT screen. (See Fig. 8-51.)
2) Loosen the DY (deflection yoke) tightening nut. (See Fig. 8-49.)
3) Make a picture horizontal by turning the DY.
4) Retighten the nut. (Do not tighten excessively.)

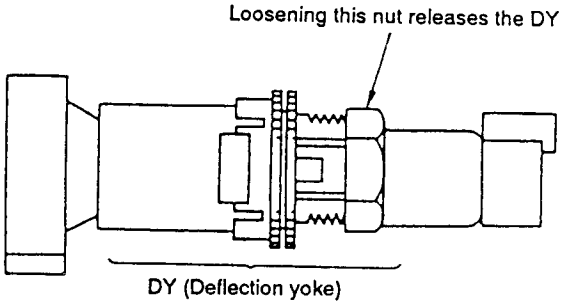

Fig. 8-49.

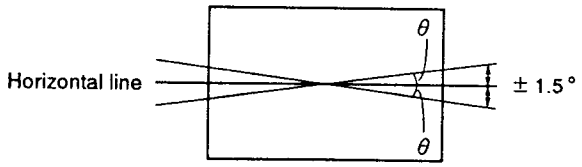

Specified value: Image orientation within ± 1.5° of horizontal line.

Fig. 8-50.

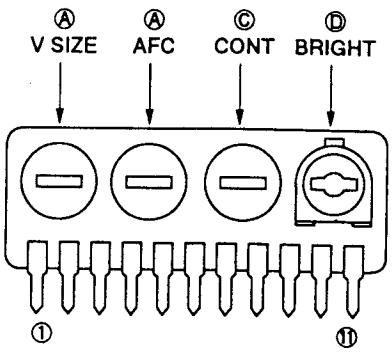

Volume array (CP901)

Fig. 8-51.

For Service Manuals Contact
MAURITRON TECHNICAL SERVICES
8 Cherry Tree Rd, Chinnor
Oxon OX9 4QY
Tel:- 01844-351694 Fax:- 01844-352554
Email:- enquiries@mauritron.co.uk

8-5-2. Centering Adjustment

Mode	Playback
Signal	Alignment tape for checking operation (WR5-5CSP) Monoscope portion
Specified Value	See Fig. 8-53.

Adjustment method:

1) Turn the centering adjustment rings to provide an image with even right, left, upper and lower margins. (See Fig. 8-52.)

Note: Since the centering position is affected by the earth magnetism, turn the equipment over 360° horizontally, and make adjustments at the orientation which exhibits median displacements of the image.

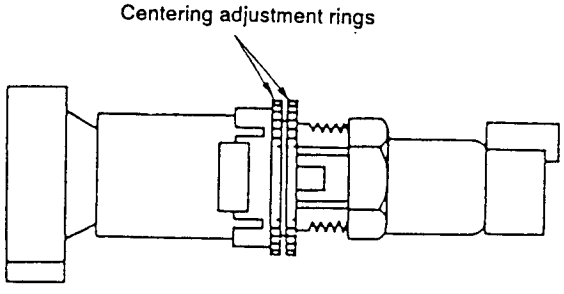

Fig. 8-52.

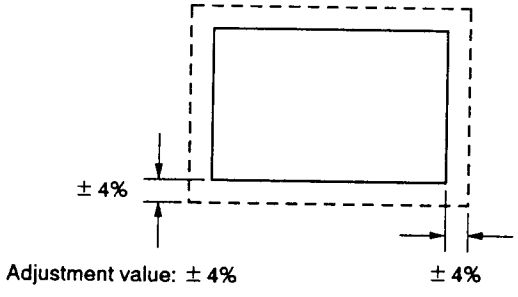

Fig. 8-53.

8-5-3. AFC Adjustment (VF-26 Board)

Mode	E-E or Camera standby
Signal	Color bar
Measurement Point	C915 ⊕ side
Measuring Instrument	Digital voltmeter or oscilloscope (DC range)
Adjustment Element	Volume array Ⓑ (AFC)
Specified Value	2.6 ± 0.2 Vdc

Adjustment method:

1) Adjust volume array Ⓑ (AFC) for 2.6 ± 0.2 Vdc. (See Fig. 8-51.)

8-5-4. Horizontal Amplitude Adjustment (VF-26 Board)

Mode	Playback
Signal	Alignment tape for checking operation (WR5-5CSP) Monoscope portion
Adjustment Element	C905
Specified Value	6 ± 3.2%

Adjustment method:

1) Line up the upper and lower sections of the monoscope image with the upper and lower edges of the screen by rotating volume array Ⓐ (V SIZE). (See Fig. 8-51.)
2) Rotate volume array Ⓓ (BRIGHT) to set the brightness to the normal level.
3) Short or open the pattern [A] of the H size adjustment capacitor (C905) to provide horizontal overscans of 6 ± 3.2% (total of left and right). (See Fig. 8-55.)

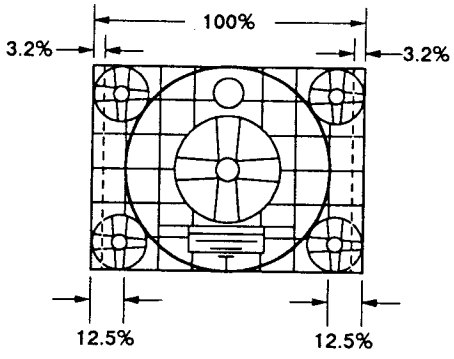

Fig. 8-54.

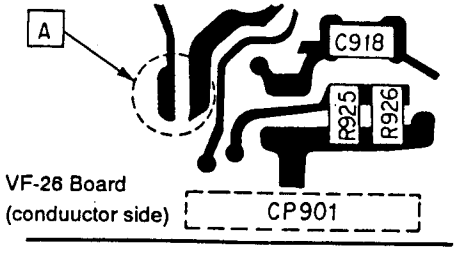

A section	H size
Open	Large
Short	Small

Fig. 8-55.

For Service Manuals Contact
MAURITRON TECHNICAL SERVICES
8 Cherry Tree Rd, Chinnor
Oxon OX9 4QY
Tel:- 01844-351694 Fax:- 01844-352554
Email:- enquiries@mauritron.co.uk

8-5-5. Vertical Amplitude Adjustment (VF-26 Board)

Mode	Playback
Signal	Alignment tape for checking operation (WR5-5CSP) Monoscope portion
Adjustment Element	Volume array Ⓐ (V SIZE)
Specified Value	6 ± 3.2%

Adjustment method:

1) By turning volume array Ⓐ (V SIZE), adjust vertical overscan to 6 ± 3.2% (upper and lower total). (See Fig. 8-51.)

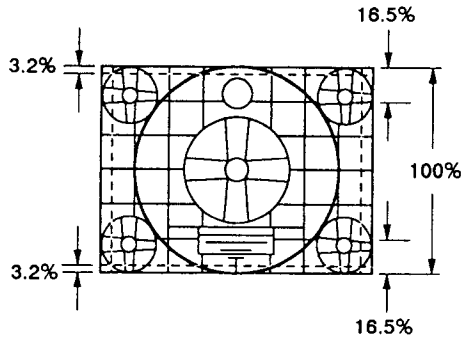

Fig. 8-56.

8-5-6. Focus Adjustment (VF-26 Board)

Mode	Playback
Signal	Alignment tape for checking operation (WR5-5CSP) Monoscope portion
Adjustment Element	RV901

Adjustment method:

1) Adjust to the best focus point with RV901.

8-5-7. Brightness, Contrast Adjustments (VF-26 Board)

Mode	Playback
Signal	Alignment tape for checking operation (WR5-5CSP) Monoscope portion
Adjustment Element	Brightness: Volume array Ⓓ (BRIGHT) Contrast: Volume array Ⓒ (CONT)

Adjustment method:

1) Adjust volume array Ⓓ (BRIGHT) and Ⓒ (CONT) alternately until the bright and dark areas of a gray scale are displayed correctly. (The bright areas should not be made too bright to avoid a fuzzy display of the cross-hatches in the monoscope circle, and the brightness of the dark areas should be such that discrimination between the darkest and second darkest area is possible.) (See Fig. 8-51.)

For Service Manuals Contact
MAURITRON TECHNICAL SERVICES
8 Cherry Tree Rd, Chinnor
Oxon OX9 4QY
Tel:- 01844-351694 Fax:- 01844-352554
Email:- enquiries@mauritron.co.uk

8-6. ARRANGEMENT DIAGRAMS FOR ADJUSTMENT PARTS

CD-60 BOARD (CONDUCTOR SIDE)

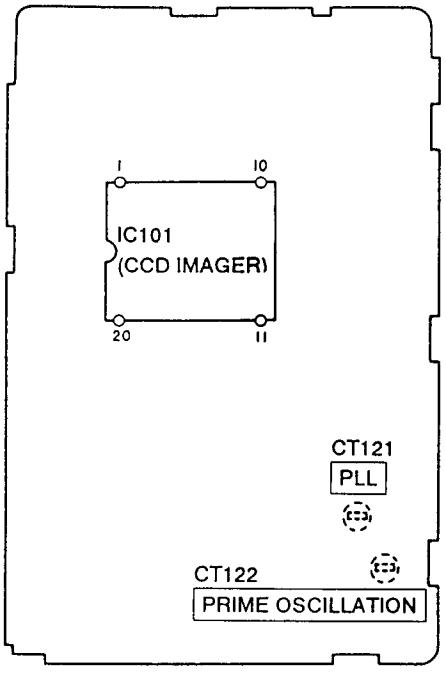

CT121 AND CT122
ON COMPONENT SIDE

VC-96 BOARD (CONDUCTOR SIDE)

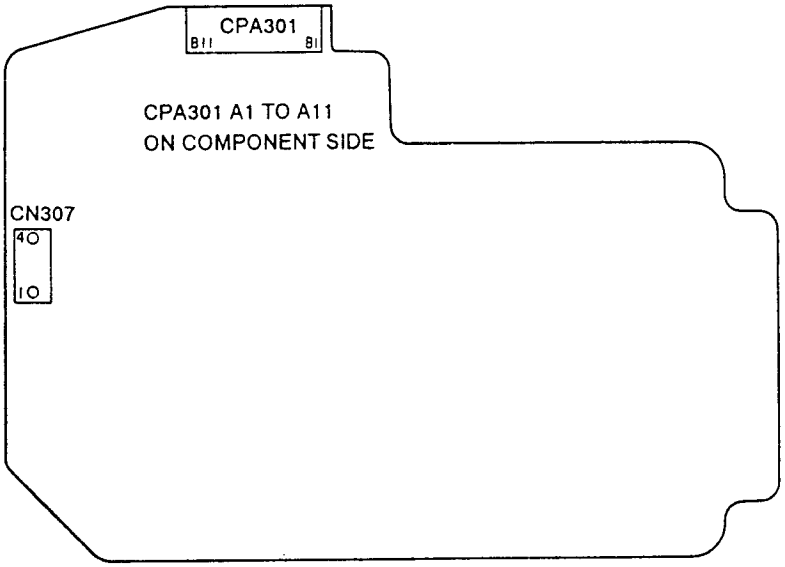

CT-40 BOARD (COMPONENT SIDE)
(Also illustarated on page 306.)

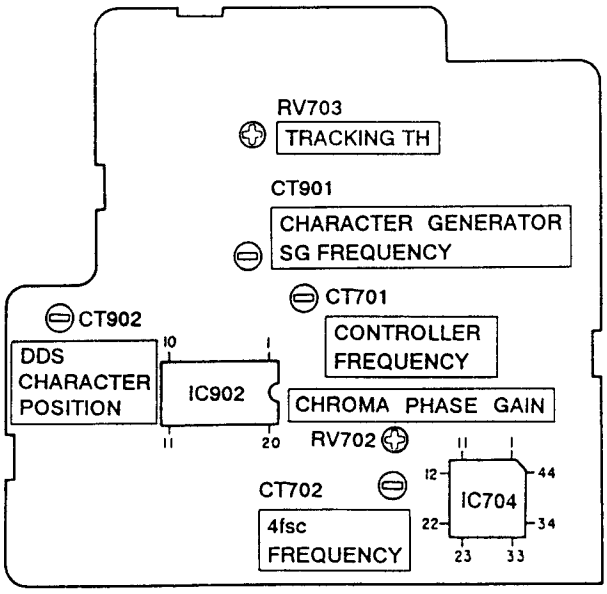

For Service Manuals Contact
MAURITRON TECHNICAL SERVICES
8 Cherry Tree Rd, Chinnor
Oxon OX9 4QY
Tel:- 01844-351694 Fax:- 01844-352554
Email:- enquiries@mauritron.co.uk

VF-26 BOARD (COMPONENT SIDE)

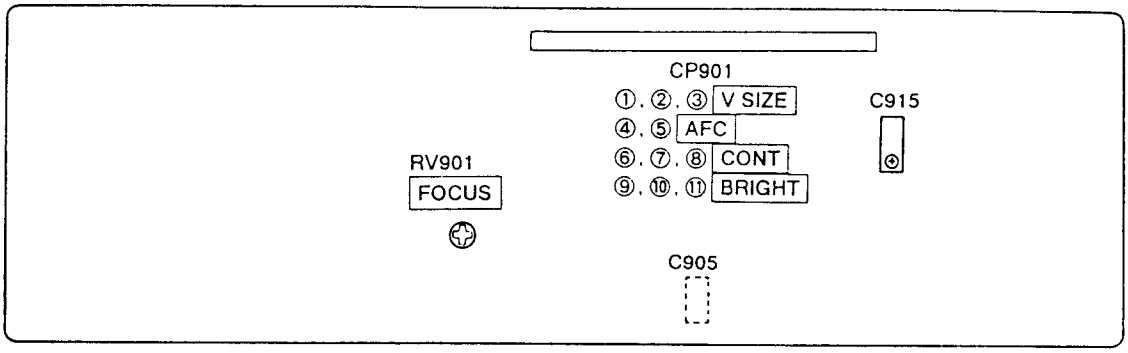

VF-27 BOARD (COMPONENT SIDE)

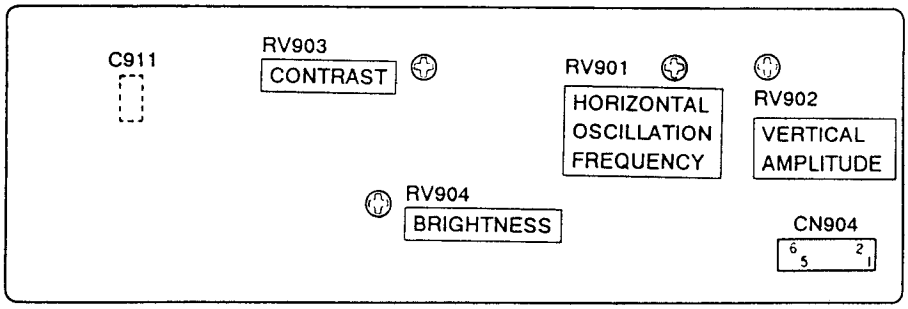

For Service Manuals Contact
MAURITRON TECHNICAL SERVICES
8 Cherry Tree Rd, Chinnor
Oxon OX9 4QY
Tel:- 01844-351694 Fax:- 01844-352554
Email:- enquiries@mauritron.co.uk

SECTION 9
MECHANICAL ADJUSTMENTS

For Mechanical Adjustments

Refer to mechanical adjustment (8 mm Video MECHANICAL ADJUSTMENT MANUAL Ⅲ) manual for the adjustments and checks of mechanism section and the mechanical parts replacement. (9-972-732-11)

For setting of the track shift mode, however, refer to the following.

9-1. SETTING THE TRACK SHIFT MODE

Note: Camera part and video part should have been installed.

[Setting Method]

1) Set the adjustment commander to the HOLD ON side.
2) Press EDIT SEARCH + button once, and select page 1.
3) Select the adjustment adress 4D with FF or REW button.
4) Set to 3X with PLAY and STOP button. (Setting of track shift mode)

Note: 3X should be the number from 31 to 3F. (To display "3X" with PLAY and STOP button is simple to shift.)

(When HOLD OFF once after the setting and HOLD ON again, the display of the address data will be changed. To set the another mode with shifting, repeat the procedures from 3).)

5) Set to the HOLD OFF side in order to set the normal mode.

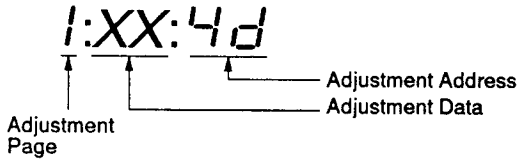

(1X: TEST 1
2X: TEST 2 ('CH Playback)
3X: TEST 3 (Shift mode)
4X: Shift release)

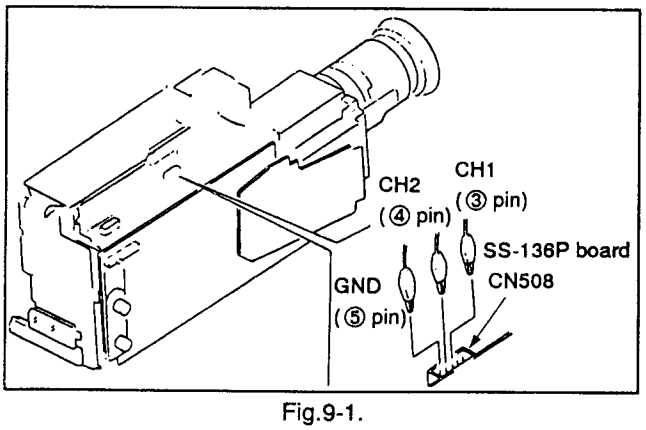

Fig.9-1.

9-2. PREPARATION FOR ADJUSTMENT

1) Clean the tape running surfaces (tape guide, drum, capstan shaft, pinch roller.)
2) Connect to the oscilloscope.
   CH1: SS-136P board CN508 pin ③ (PB RF)
   CH2: SS-136P board CN508 pin ④ (SWP)
3) Play back the tracking alignment tape (WR5-1CP) (8-967-995-07).
4) Check that the RF waveform of the oscilloscope is flat at both inlet and outlet sides. When not flat, make adjustment as follows. (Refer to Figs. 9-1 and 9-2.)

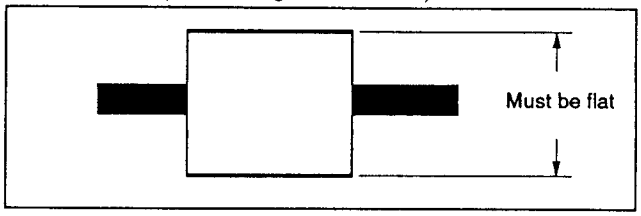

Fig.9-2.

For Service Manuals Contact
MAURITRON TECHNICAL SERVICES
8 Cherry Tree Rd, Chinnor
Oxon OX9 4QY
Tel:- 01844-351694 Fax:- 01844-352554
Email:- enquiries@mauritron.co.uk

1 2 3 4 5

A B C D E F G H I J K

— Ref. No. VK-16 BOARD: 4000 series, DK-12 BOARD: 5000 series, CK-49 BOARD: 5000 series, LI-

For Service Manuals Contact
MAURITRON TECHNICAL SERVICES
8 Cherry Tree Rd, Chinnor
Oxon OX9 4QY
Tel:- 01844-351694 Fax:- 01844-352554
Email:- enquiries@mauritron.co.uk

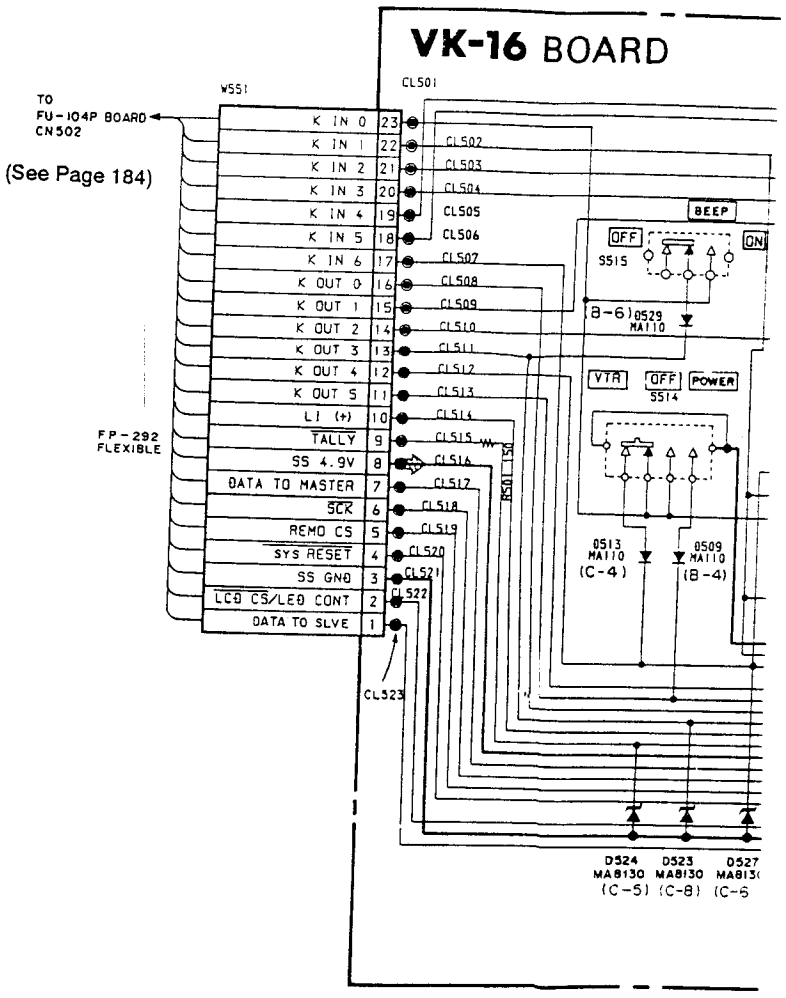

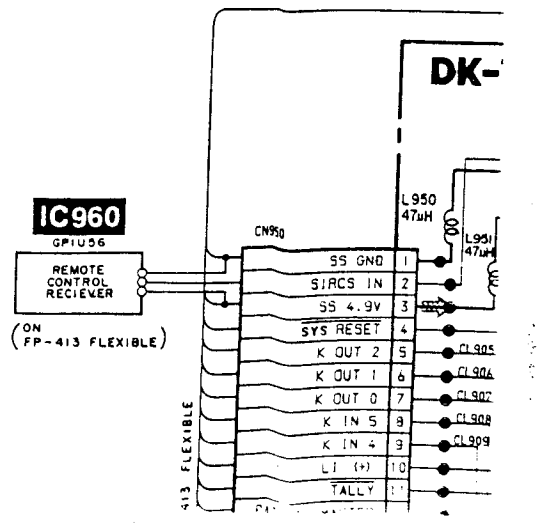

900 series, DK-12 BOARD: 5000 series, CK-49 BOARD: 5000 series, LI-36 BOARD: 6000 series, ZK-13 BOARD: 5000 series —

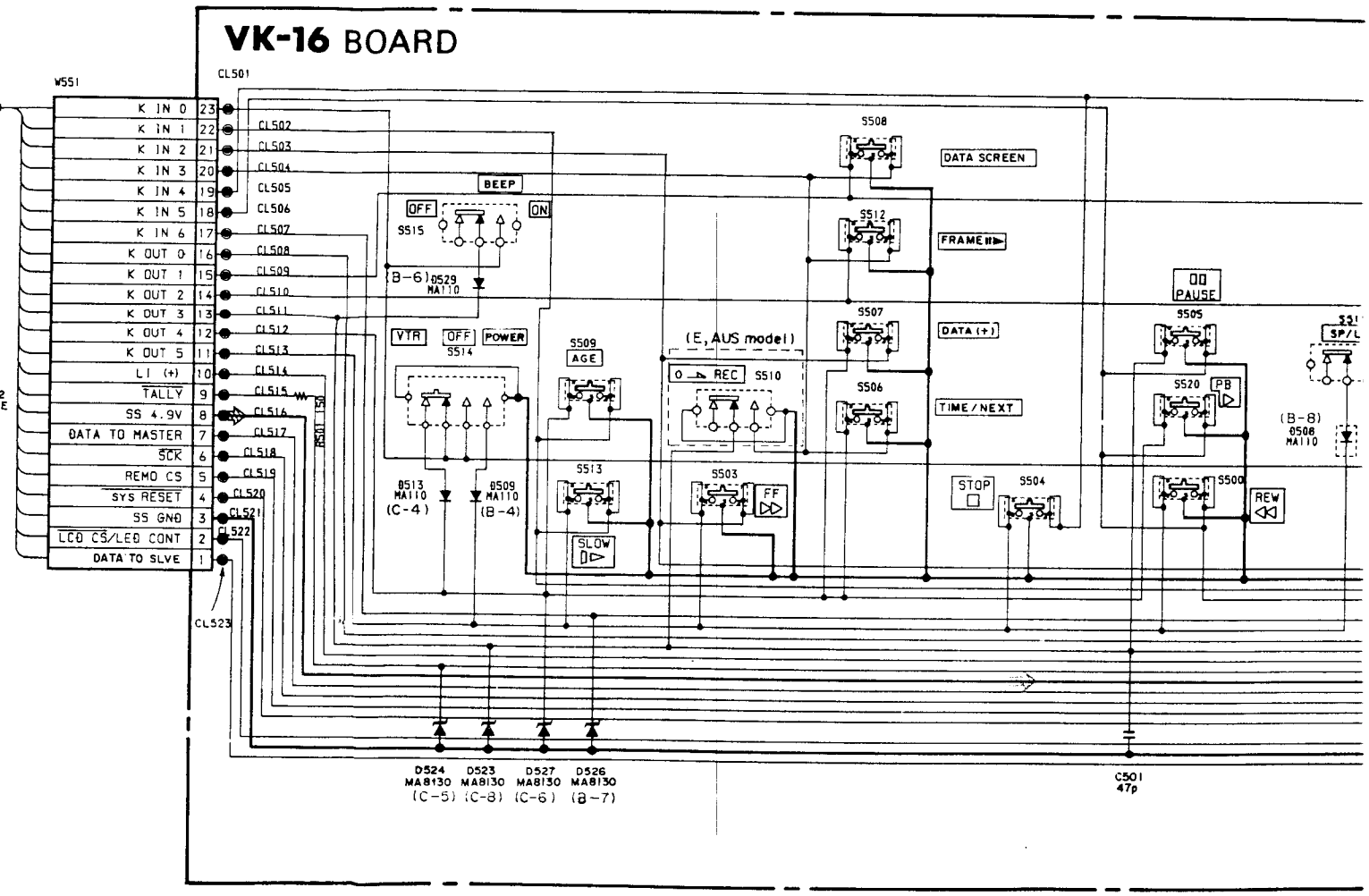

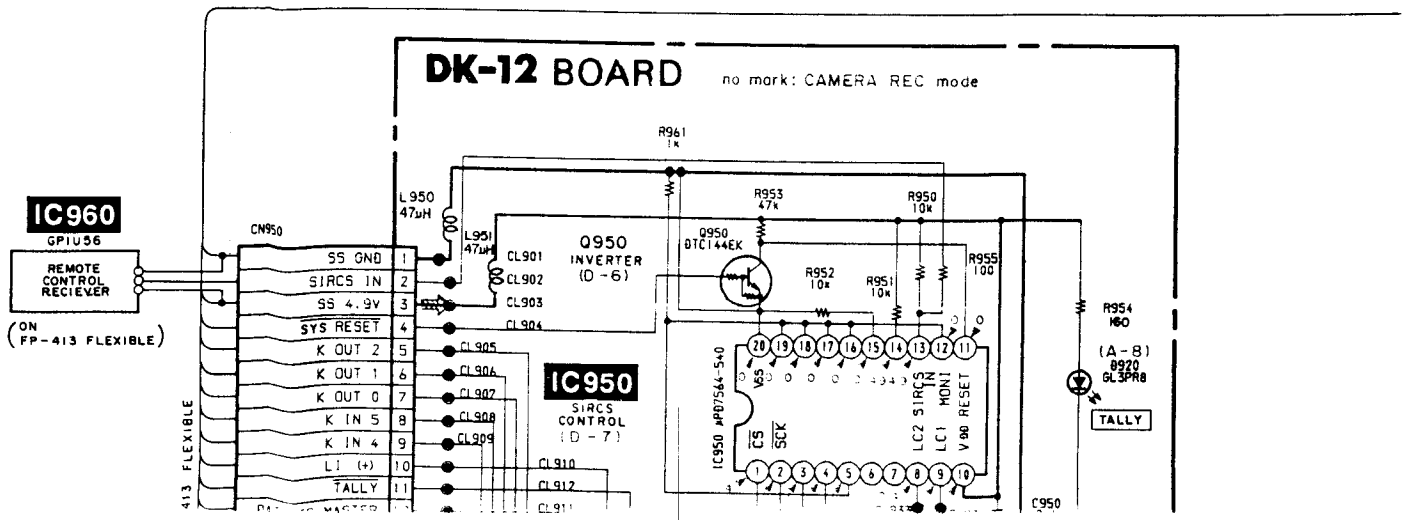

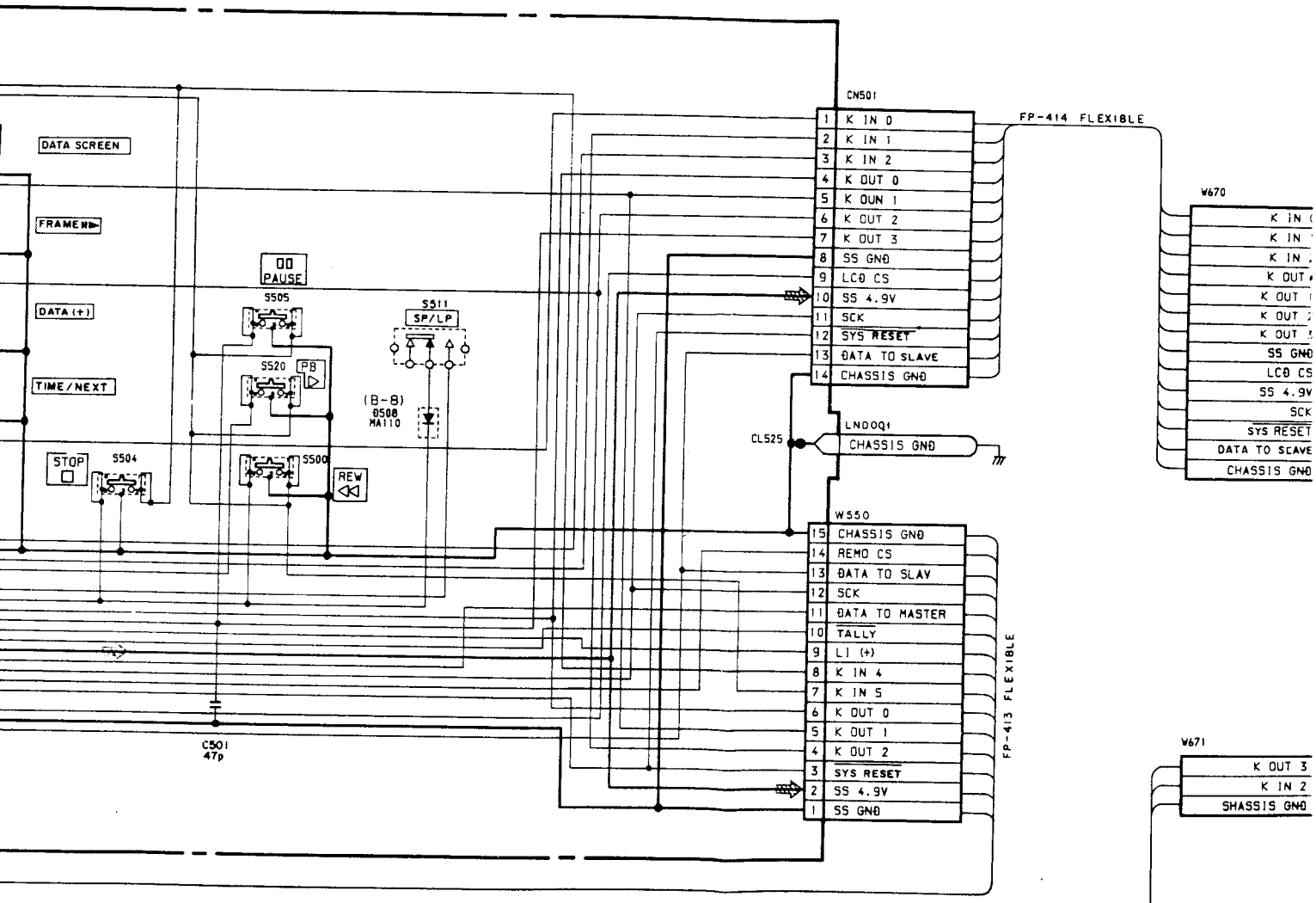

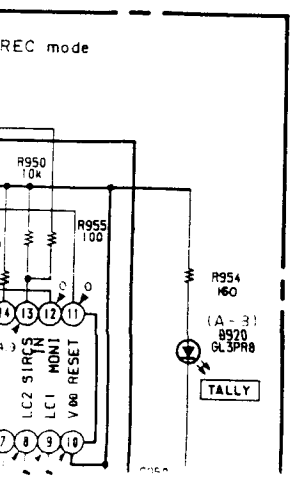

For Service Manuals Contact
MAURITRON TECHNICAL SERVICES
8 Cherry Tree Rd, Chinnor
Oxon OX9 4QY
Tel:- 01844-351694 Fax:- 01844-352554
Email:- enquiries@mauritron.co.uk

13 | 14 | 15 | 16 | 17 | 18 | 19 | 20 | 2

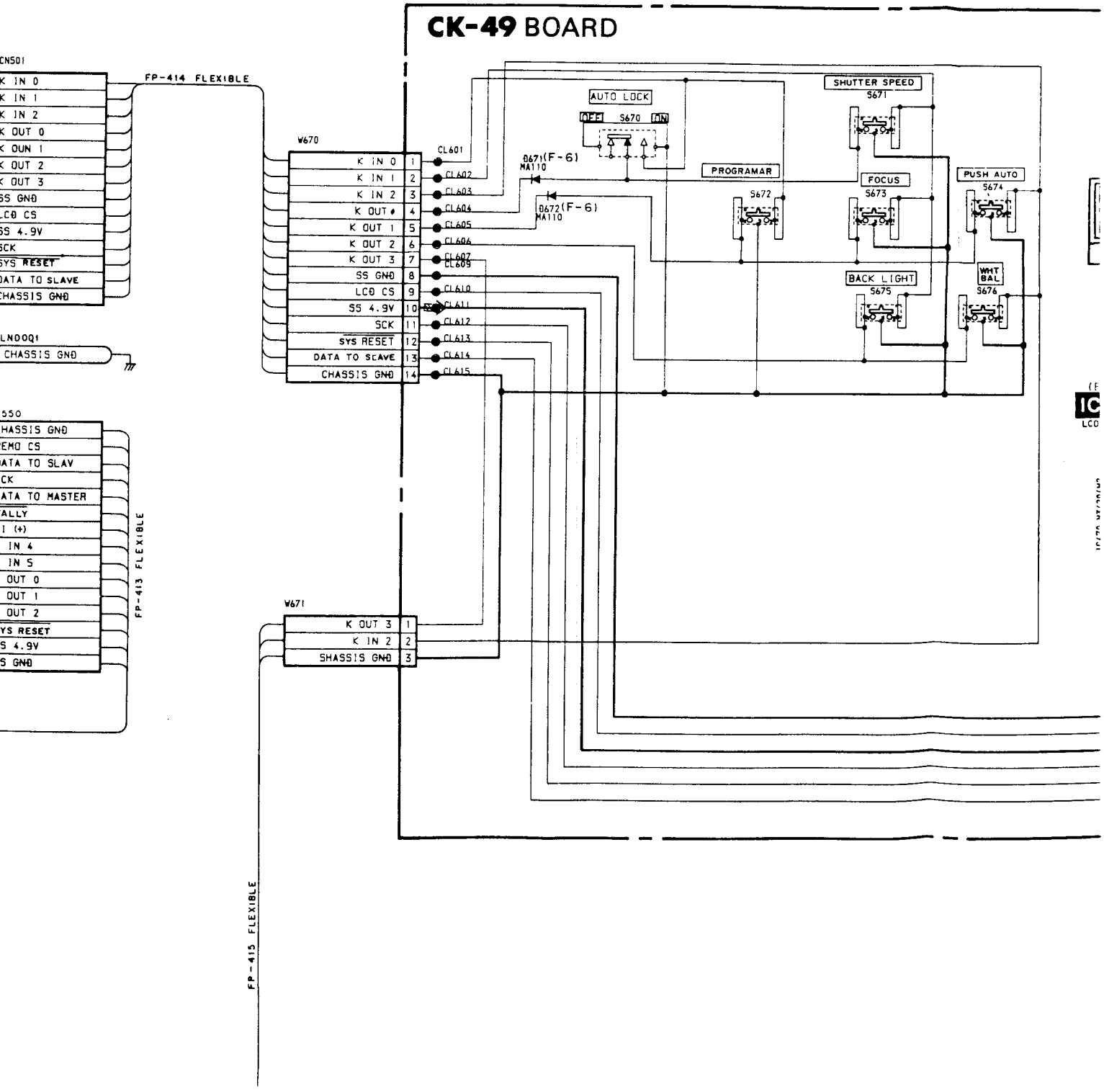

20 21 22 23 24 25 26 27

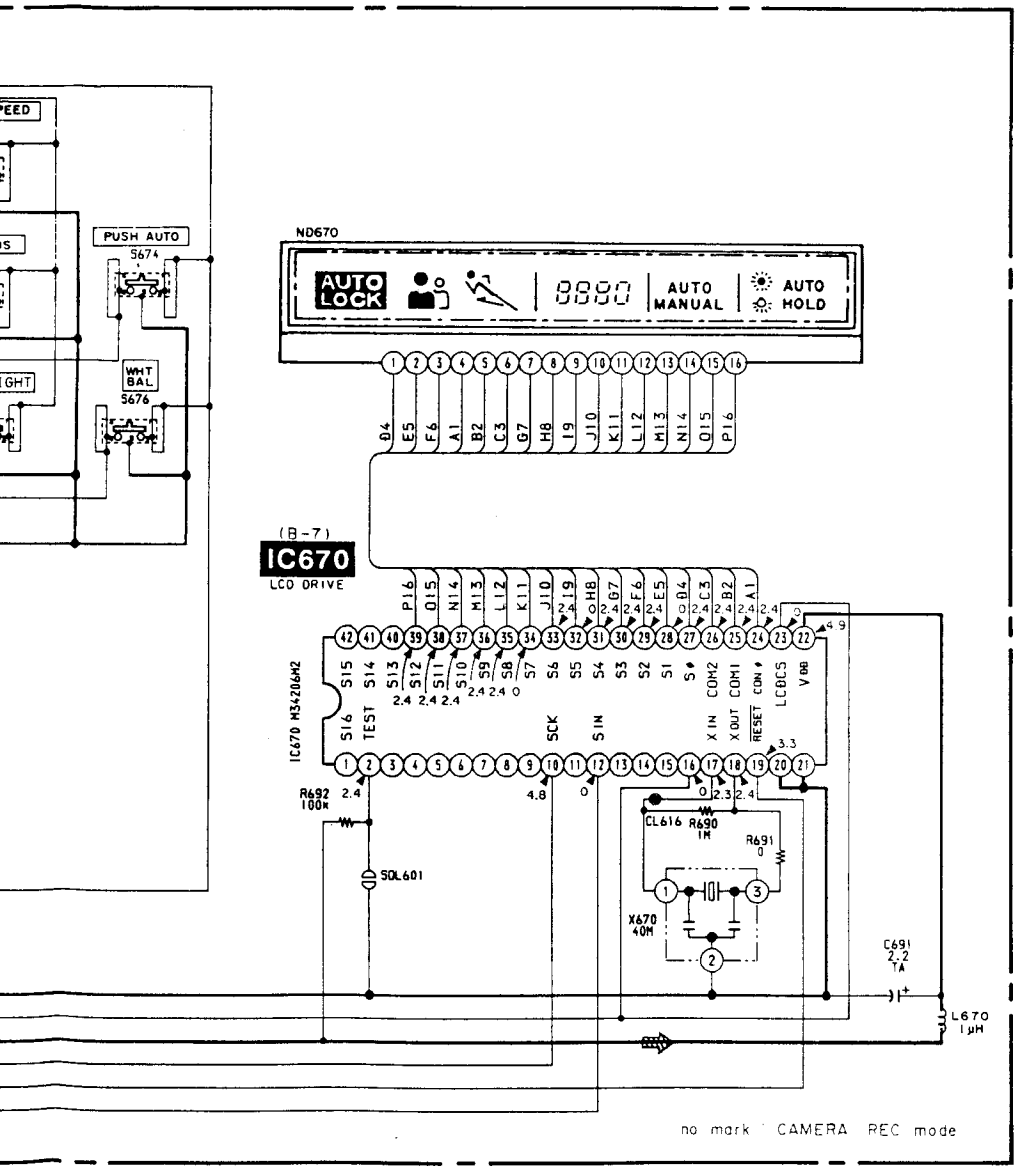

For Service Manuals Contact
MAURITRON TECHNICAL SERVICES
8 Cherry Tree Rd, Chinnor
Oxon OX9 4QY
Tel:- 01844-351694 Fax:- 01844-352554
Email:- enquiries@mauritron.co.uk

A-7071-406-A CK-49/ZK-13 MOUNT (Ref. No 5,000 Series)
****

< DIODE >

D671	8-719-404-46	DIODE	MA110
D672	8-719-404-46	DIODE	MA110

< IC >

IC670	8-759-634-72	IC	M34206M2-109FP

* A-7062-782-A DK-12P BOARD, COMPLETE
****
(Ref. No 5,000 Series)

< DIODE >

D920	8-719-812-41	LED	TLR124, RED
D921	8-719-404-46	DIODE	MA110
D922	8-719-159-30	DIODE	RD8.2SB
D923	8-719-159-30	DIODE	RD8.2SB
D924	8-719-159-30	DIODE	RD8.2SB
D925	8-719-159-30	DIODE	RD8.2SB

< IC >

IC950	8-759-145-63	IC	uPD7564G-540-E1

< TRANSISTOR >

Q950	8-729-901-01	TRANSISTOR	DTC144EK

* A-7071-424-A VK-16P BOARD, COMPLETE (AEP/UK)
****
* A-7071-454-A VK-16PB BOARD, COMPLETE (AUS/E)
****
(Ref. No 4,000 Series)

< DIODE >

D508	8-719-404-46	DIODE	MA110
D509	8-719-404-46	DIODE	MA110
D513	8-719-404-46	DIODE	MA110
D523	8-719-161-02	DIODE	RD8.210SB
D524	8-719-161-02	DIODE	RD8.210SB
D526	8-719-161-02	DIODE	RD8.210SB
D527	8-719-161-02	DIODE	RD8.210SB
D529	8-719-404-46	DIODE	MA110

< IC >

IC960	8-749-921-76	IC	GP1U56 (ON FP-413 FLEXIBLE)

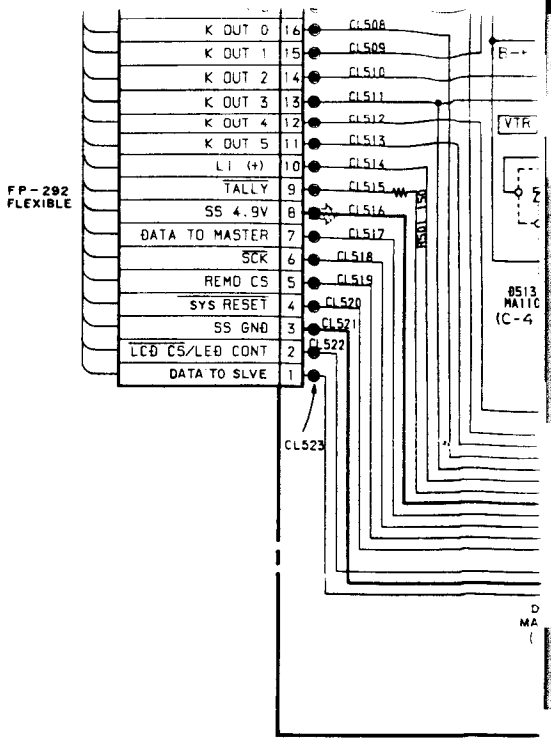

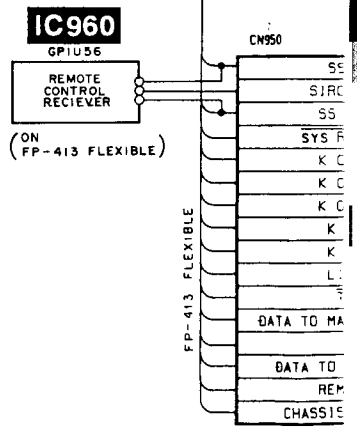

For Service Manuals Contact
MAURITRON TECHNICAL SERVICES
8 Cherry Tree Rd, Chinnor
Oxon OX9 4QY
Tel:- 01844-351694 Fax:- 01844-352554
Email:- enquiries@mauritron.co.uk

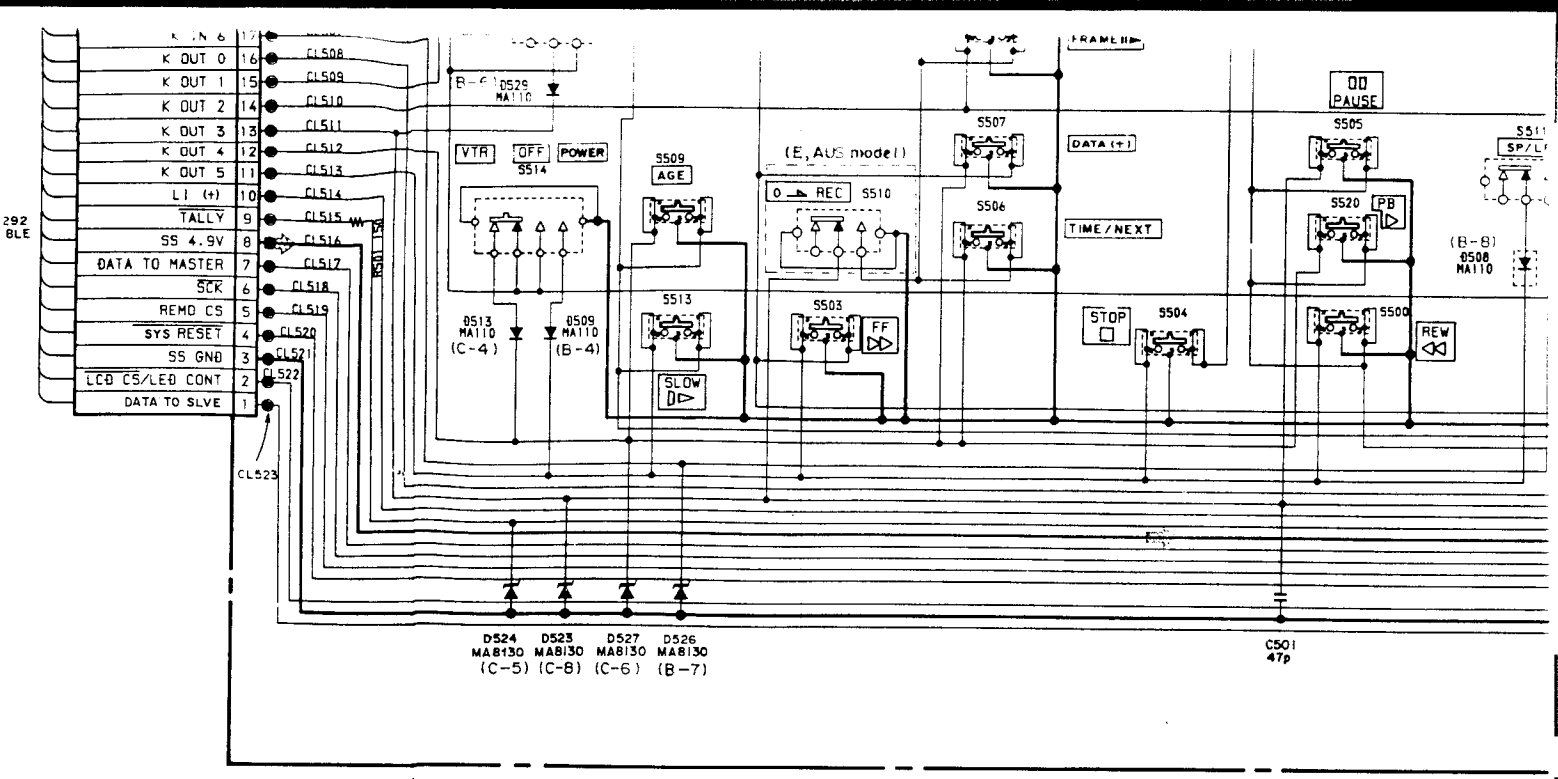
K OUT 0
K OUT 1
K OUT 2
K OUT 3
K OUT 4
K OUT 5
LI (+)
TALLY
SS 4.9V
DATA TO MASTER
SCK
REMO CS
SYS RESET
SS GND
LCD CS/LED CONT
DATA TO SLVE
CL523
VTR
OFF
POWER
S514
S509
AGE
(E, AUS mode)
REC
S510
S507
S506
DATA (+)
TIME/NEXT
PAUSE
S505
PB
S520
STOP
S504
S503
FF
REW
S500
SLOW
S513
D513 MA110 (C-4)
D509 MA110 (B-4)
D524 MA8130 (C-5)
D523 MA8130 (C-8)
D527 MA8130 (C-6)
D526 MA8130 (B-7)
C501 47p

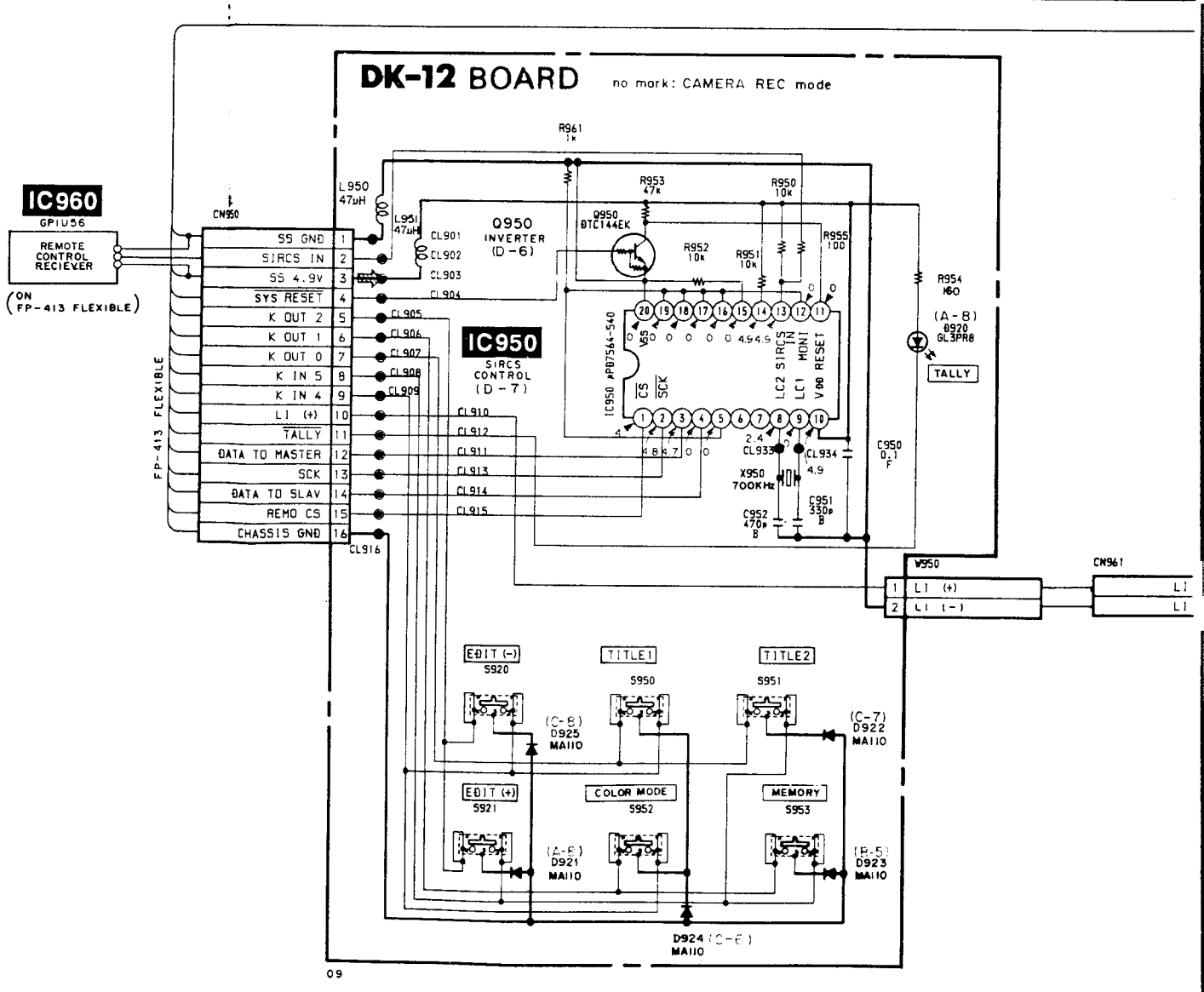
DK-12 BOARD
no mark: CAMERA REC mode
IC960
GP1U56
REMOTE CONTROL RECIEVER
(ON FP-413 FLEXIBLE)
CN950
FP-413 FLEXIBLE
SS GND
SIRCS IN
SS 4.9V
SYS RESET
K OUT 2
K OUT 1
K OUT 0
K IN 5
K IN 4
LI (+)
TALLY
DATA TO MASTER
SCK
DATA TO SLAV
REMO CS
CHASSIS GND
L950 47µH
L951 47µH
Q950 INVERTER (D-6)
Q950 BTC144EK
IC950
IC950 µPD7564-540
SIRCS CONTROL (D-7)
R961 1k
R953 47k
R950 10k
R952 10k
R951 10k
R955 100
R954 160
(A-8) D920 GL3PR8
TALLY
X950 700KHz
C950 0.1 F
C951 330p B
C952 470p B
CL933 2.4
CL934 4.9
W950
CN961
EDIT (-) S920
TITLE1 S950
TITLE2 S951
EDIT (+) S921
COLOR MODE S952
MEMORY S953
(C-8) D925 MA110
(C-7) D922 MA110
(A-8) D921 MA110
(B-5) D923 MA110
D924 (C-6) MA110

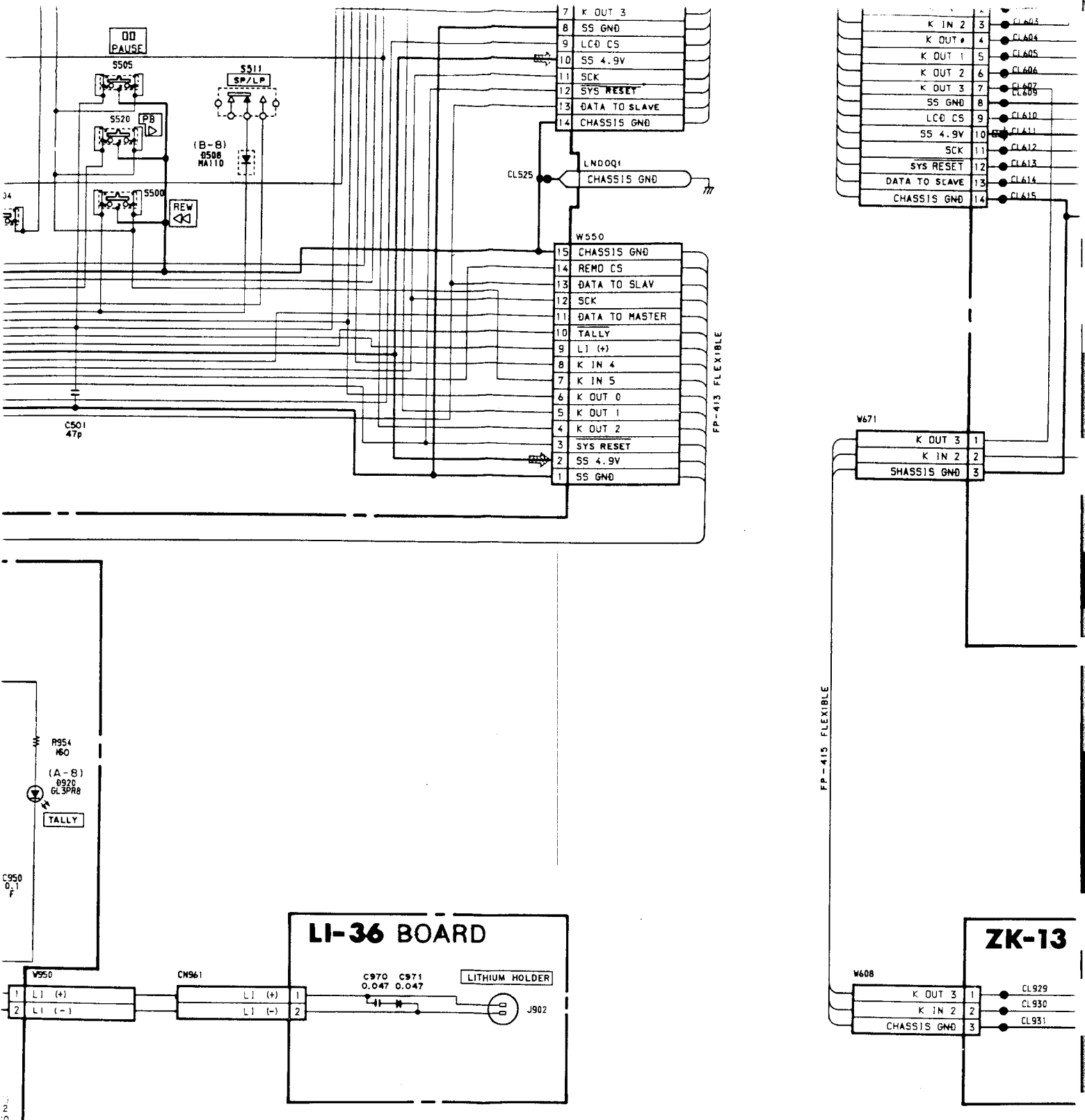

For Service Manuals Contact
MAURITRON TECHNICAL SERVICES
8 Cherry Tree Rd, Chinnor
Oxon OX9 4QY
Tel:- 01844-351694 Fax:- 01844-352554
Email:- enquiries@mauritron.co.uk

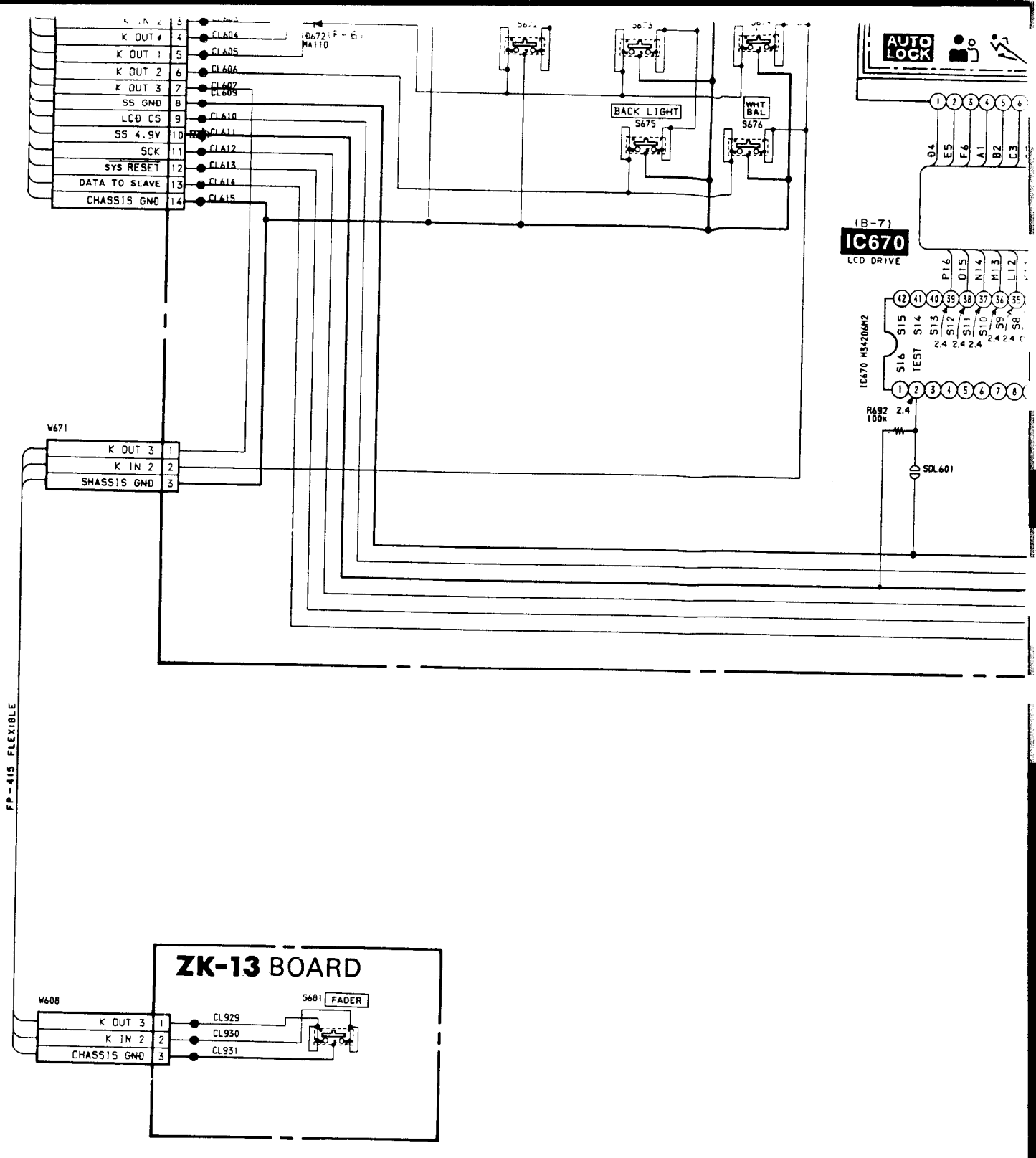
K OUT 0
K OUT 1
K OUT 2
K OUT 3
SS GND
LCD CS
SS 4.9V
SCK
SYS RESET
DATA TO SLAVE
CHASSIS GND
CL604
CL605
CL606
CL607
CL609
CL610
CL611
CL612
CL613
CL614
CL615
D672
MA110
BACK LIGHT
S675
WHT BAL
S676
AUTO LOCK
(B-7)
IC670
LCD DRIVE
IC670 M34206M2
R692 100K
SDL601
W671
K OUT 3
K IN 2
SHASSIS GND
FP-415 FLEXIBLE
ZK-13 BOARD
W608
S681 FADER
K OUT 3
K IN 2
CHASSIS GND
CL929
CL930
CL931

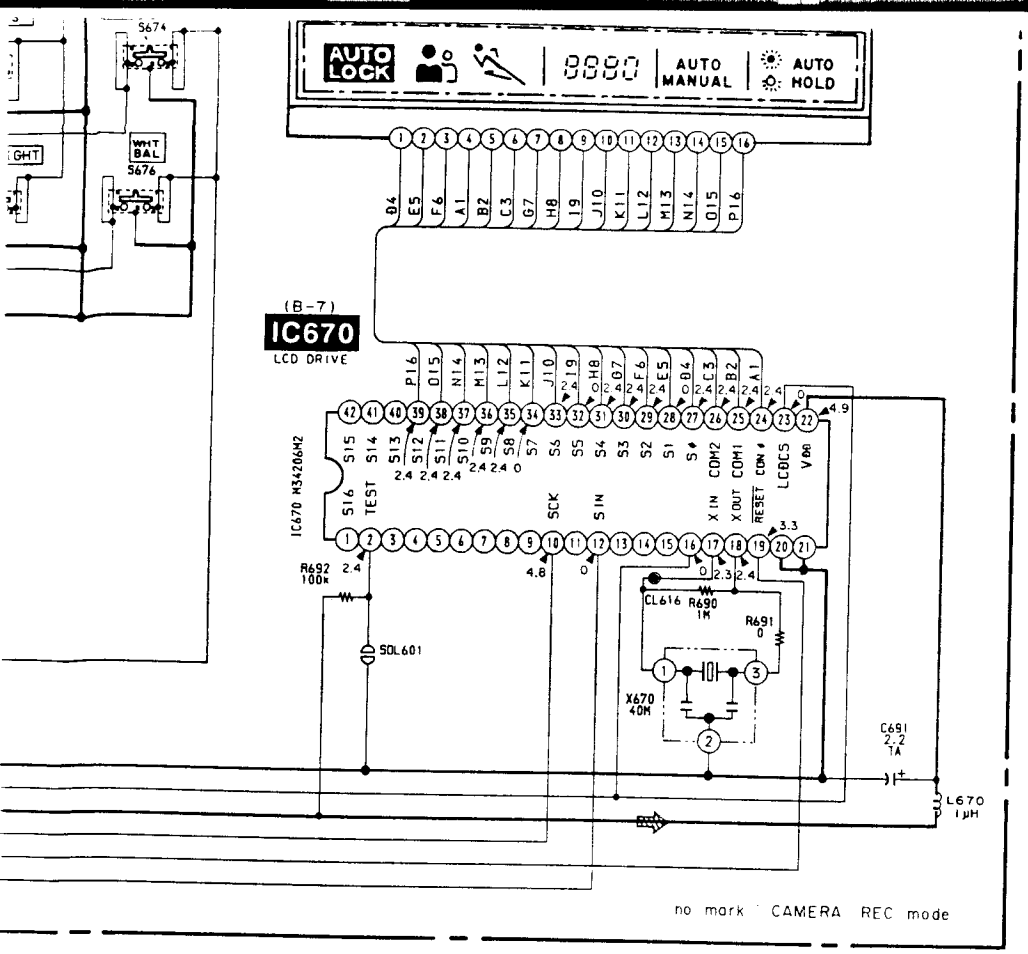

For Service Manuals Contact
MAURITRON TECHNICAL SERVICES
8 Cherry Tree Rd, Chinnor
Oxon OX9 4QY
Tel:- 01844-351694 Fax:- 01844-352554
Email:- enquiries@mauritron.co.uk

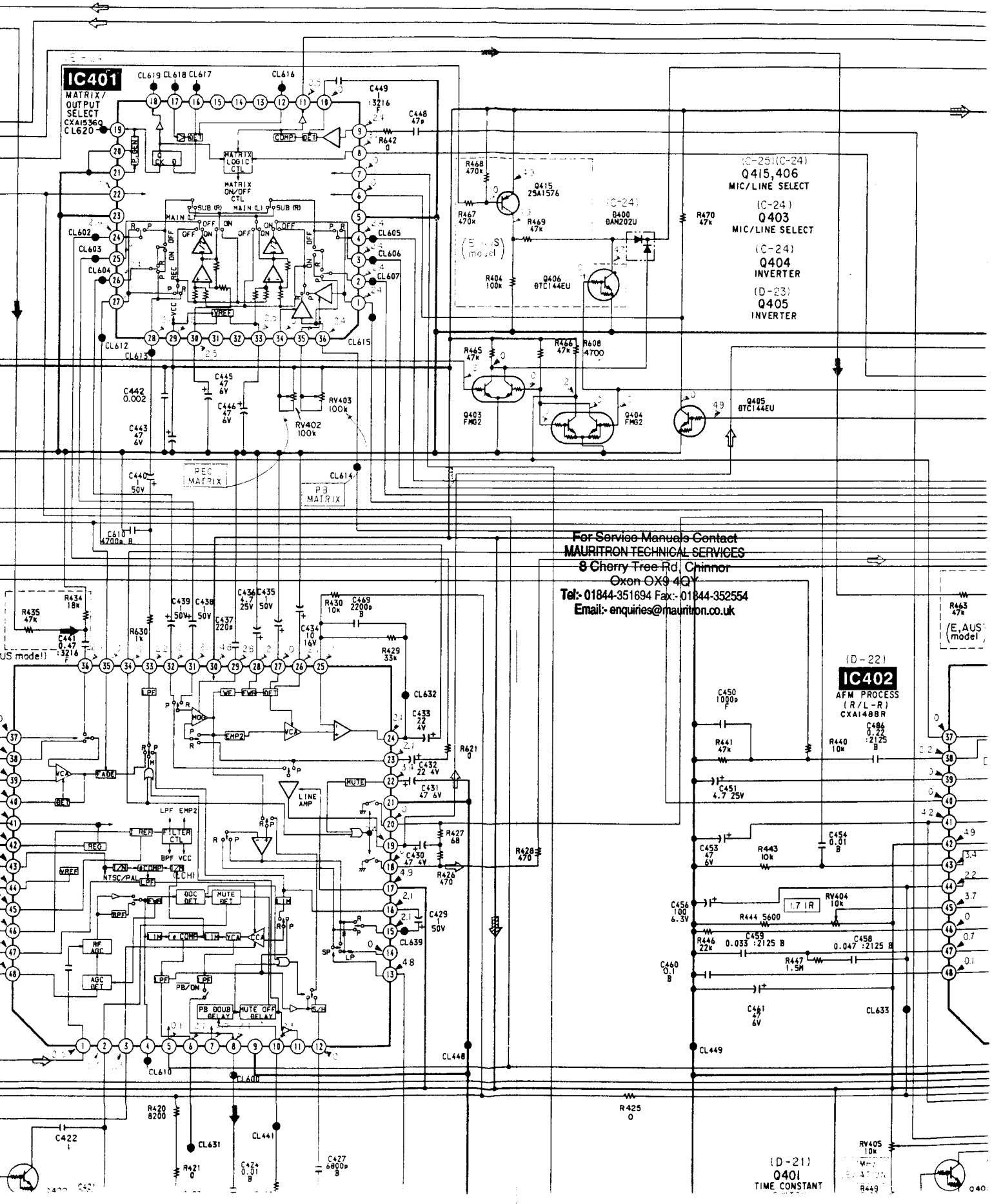

For Service Manuals Contact
MAURITRON TECHNICAL SERVICES
8 Cherry Tree Rd, Chinnor
Oxon OX9 4QY
Tel:- 01844-351694 Fax:- 01844-352554
Email:- enquiries@mauritron.co.uk

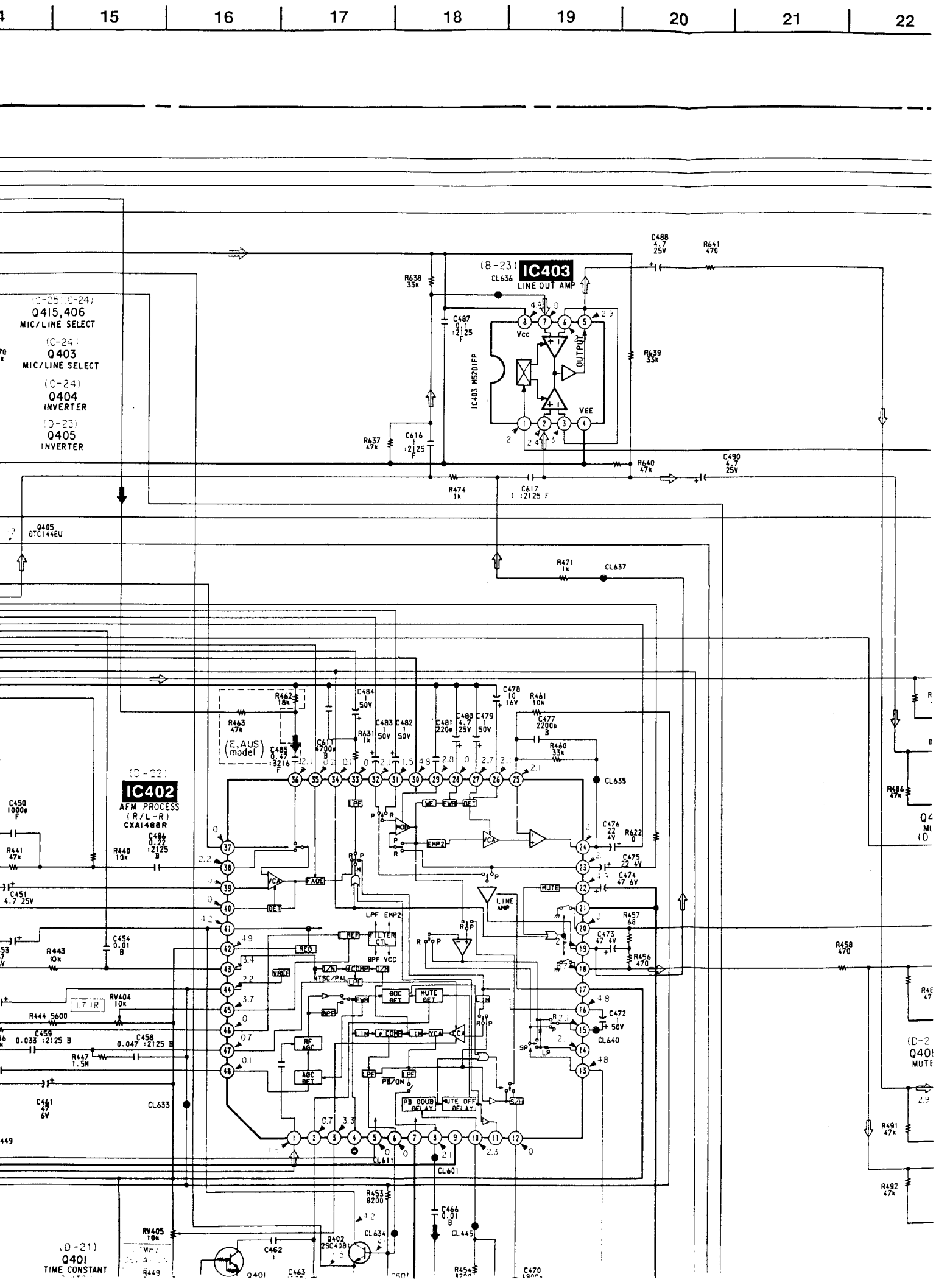

15
16
17
18
19
20
21
22
(C-25)(C-24)
Q415,406
MIC/LINE SELECT
(C-24)
Q403
MIC/LINE SELECT
(C-24)
Q404
INVERTER
(D-23)
Q405
INVERTER
(B-23)
IC403
LINE OUT AMP
CL636
IC403 M5201FP
Vcc
OUTPUT
VEE
(D-22)
IC402
AFM PROCESS
(R/L-R)
CXA1488R
(E,AUS model)
LINE AMP
FILTER CTL
NTSC/PAL
RF AGC
AGC DET
PB DOUB DELAY
MUTE OFF DELAY
CL635
CL640
CL633
CL611
CL601
CL634
CL445
(D-21)
Q401
TIME CONSTANT

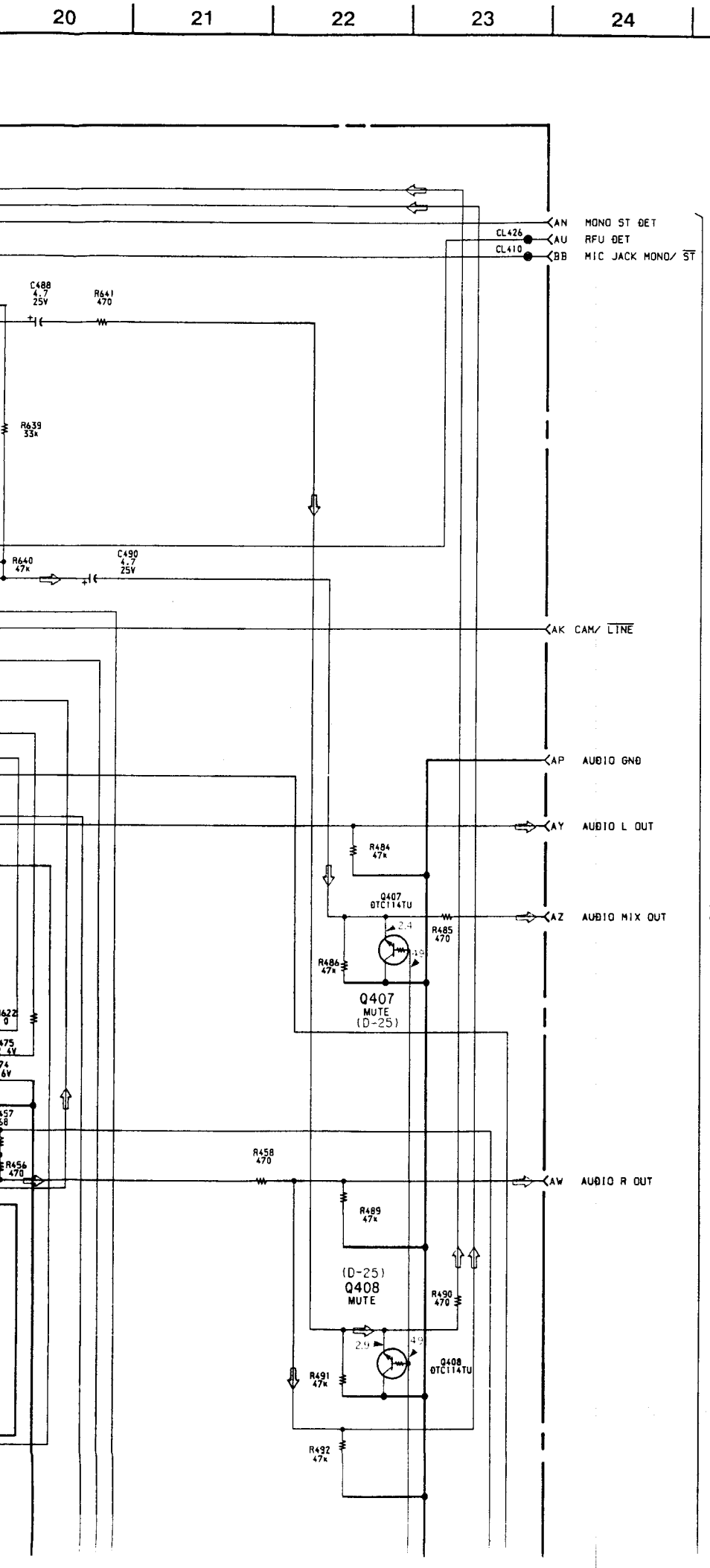

(See Page 124)

For Service Manuals Contact
MAURITRON TECHNICAL SERVICES
8 Cherry Tree Rd, Chinnor
Oxon OX9 4QY
Tel:- 01844-351694 Fax:- 01844-352554
Email:- enquiries@mauritron.co.uk

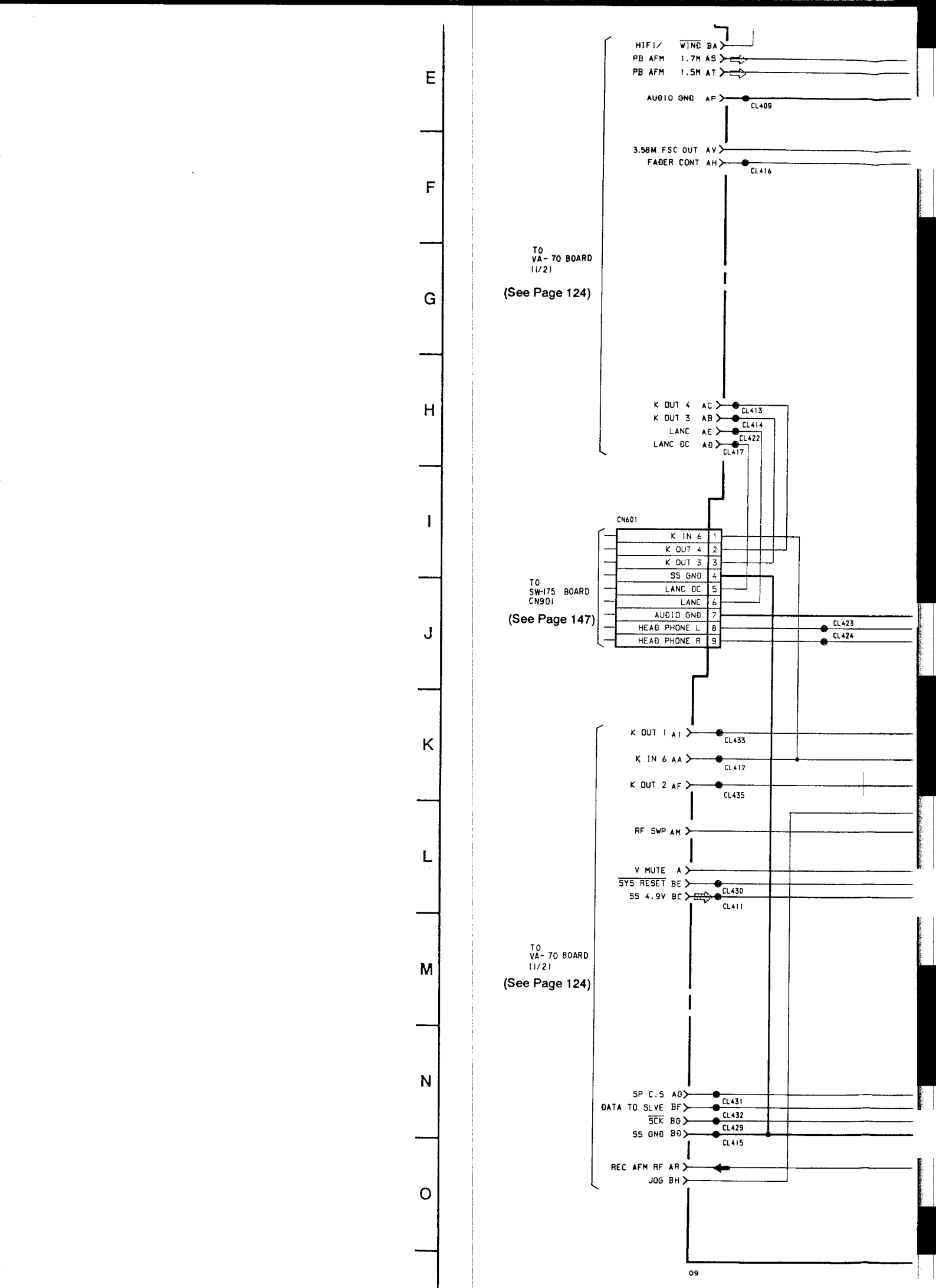
E
F
G
H
I
J
K
L
M
N
O
HIFI/ WIND BA
PB AFM 1.7M AS
PB AFM 1.5M AT
AUDIO GND AP
CL409
3.58M FSC OUT AV
FADER CONT AH
CL416
TO VA-70 BOARD (1/2)
(See Page 124)
K OUT 4 AC
K OUT 3 AB
LANC AE
LANC DC AD
CL413
CL414
CL422
CL417
CN601
K IN 6 1
K OUT 4 2
K OUT 3 3
SS GND 4
LANC DC 5
LANC 6
AUDIO GND 7
HEAD PHONE L 8
HEAD PHONE R 9
CL423
CL424
TO SW-175 BOARD CN901
(See Page 147)
K OUT 1 AJ
CL433
K IN 6 AA
CL412
K OUT 2 AF
CL435
RF SWP AM
V MUTE A
SYS RESET BE
SS 4.9V BC
CL430
CL411
TO VA-70 BOARD (1/2)
(See Page 124)
SP C.S AG
DATA TO SLVE BF
SCK BG
SS GND BD
CL431
CL432
CL429
CL415
REC AFM RF AR
JOG BH
09

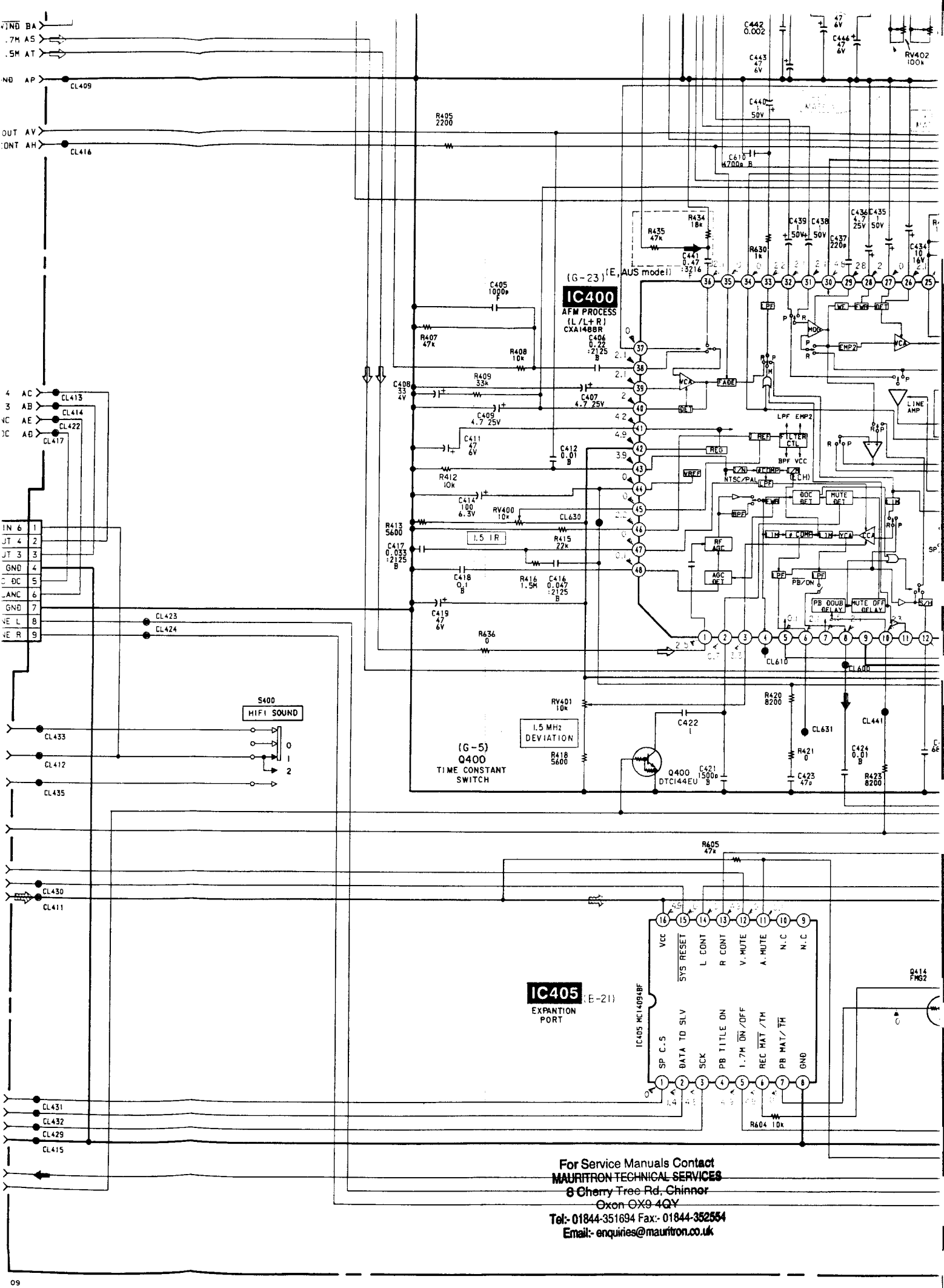

For Service Manuals Contact
MAURITRON TECHNICAL SERVICES
8 Cherry Tree Rd, Chinnor
Oxon OX9 4QY
Tel:- 01844-351694 Fax:- 01844-352554
Email:- enquiries@mauritron.co.uk

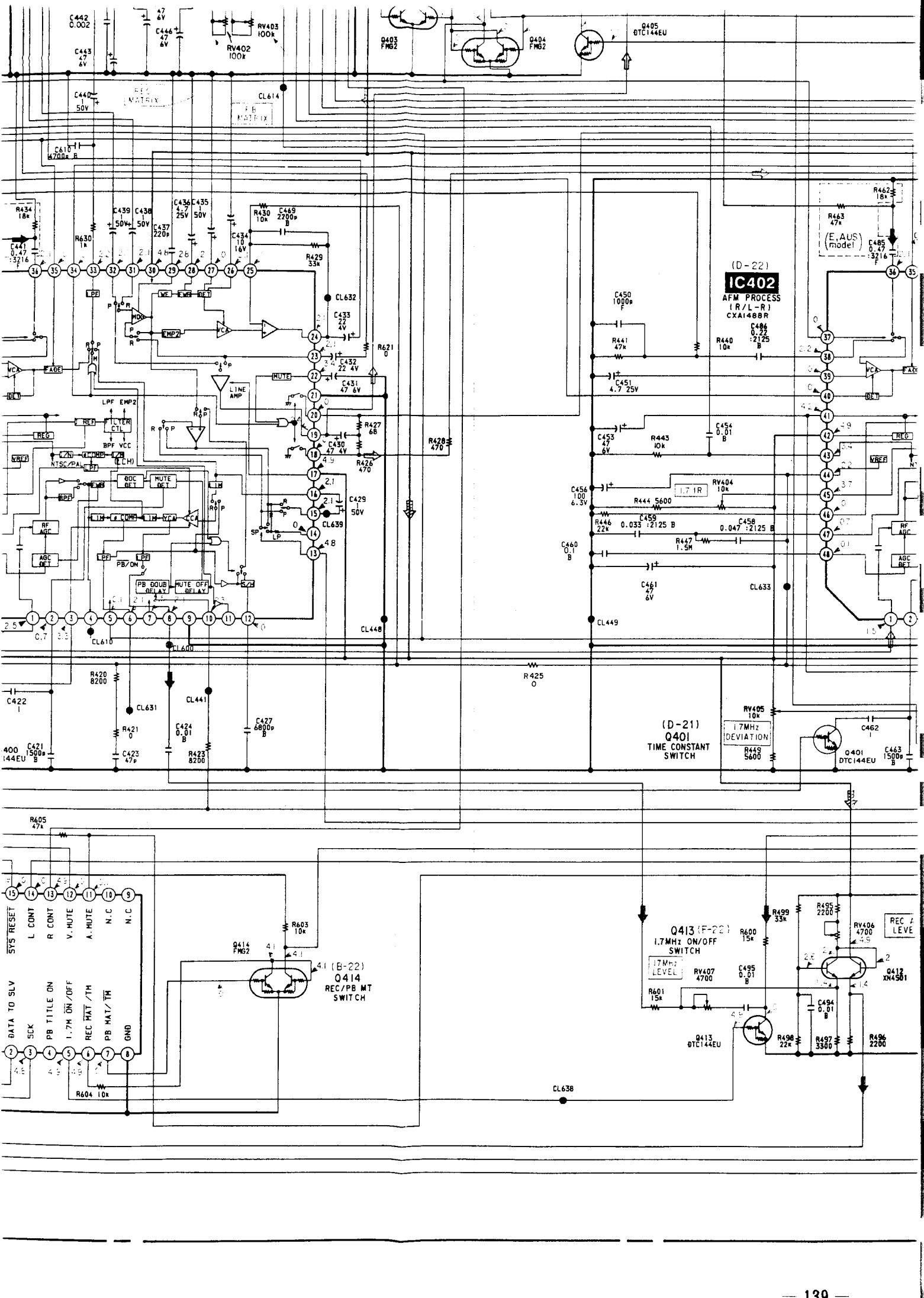
IC402
AFM PROCESS
(R/L-R)
CXA1488R
(D-22)
(D-21)
Q401
TIME CONSTANT
SWITCH
(B-22)
Q414
REC/PB MT
SWITCH
Q413 (F-22)
1.7MHz ON/OFF
SWITCH
(E,AUS)
model
SYS RESET
L CONT
R CONT
V. MUTE
A. MUTE
N.C
N.C
DATA TO SLV
SCK
PB TITLE ON
1.7M ON/OFF
REC MAT/TM
PB MAT/TM
GND

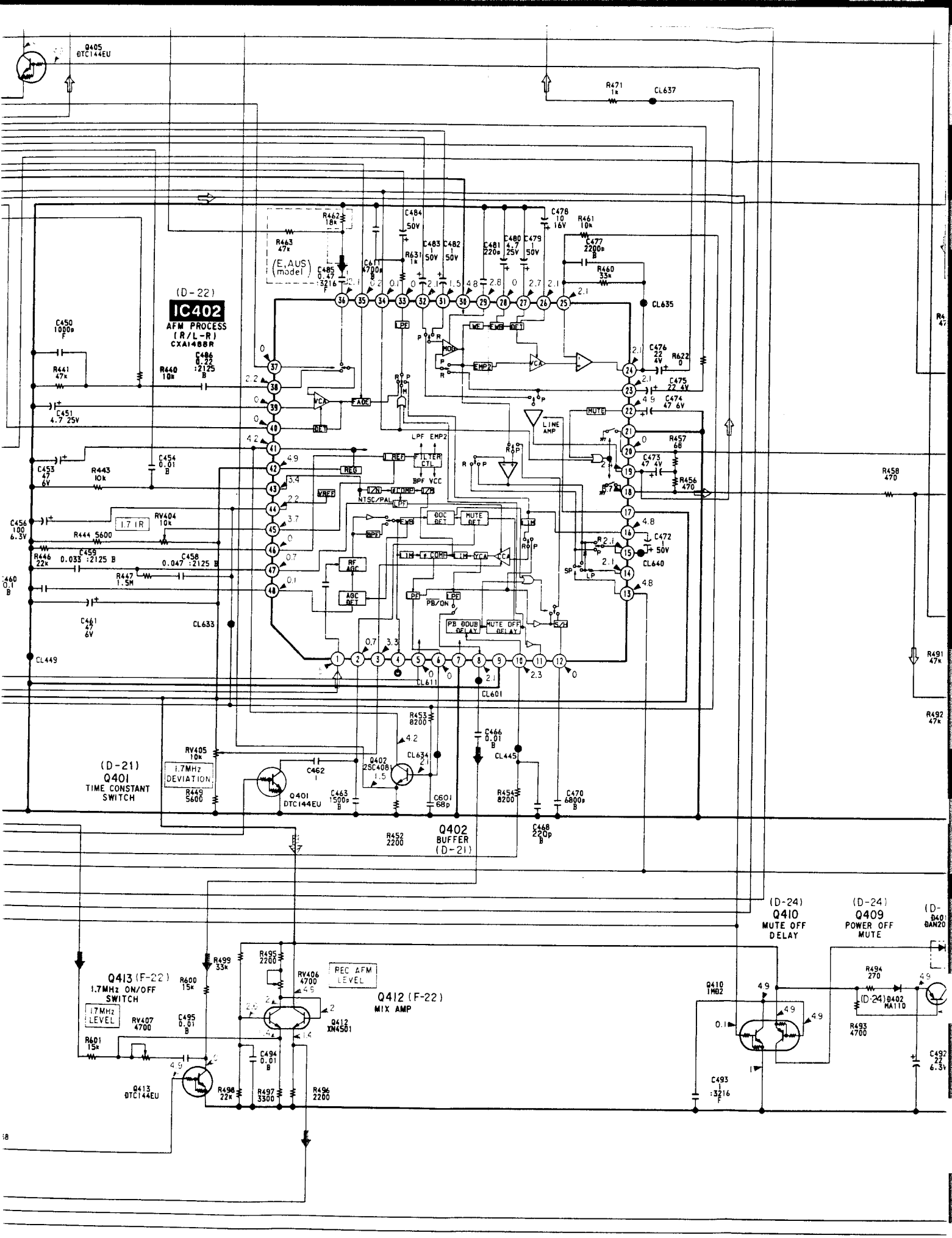

no mark : VTR REC/PB mode

VA-7

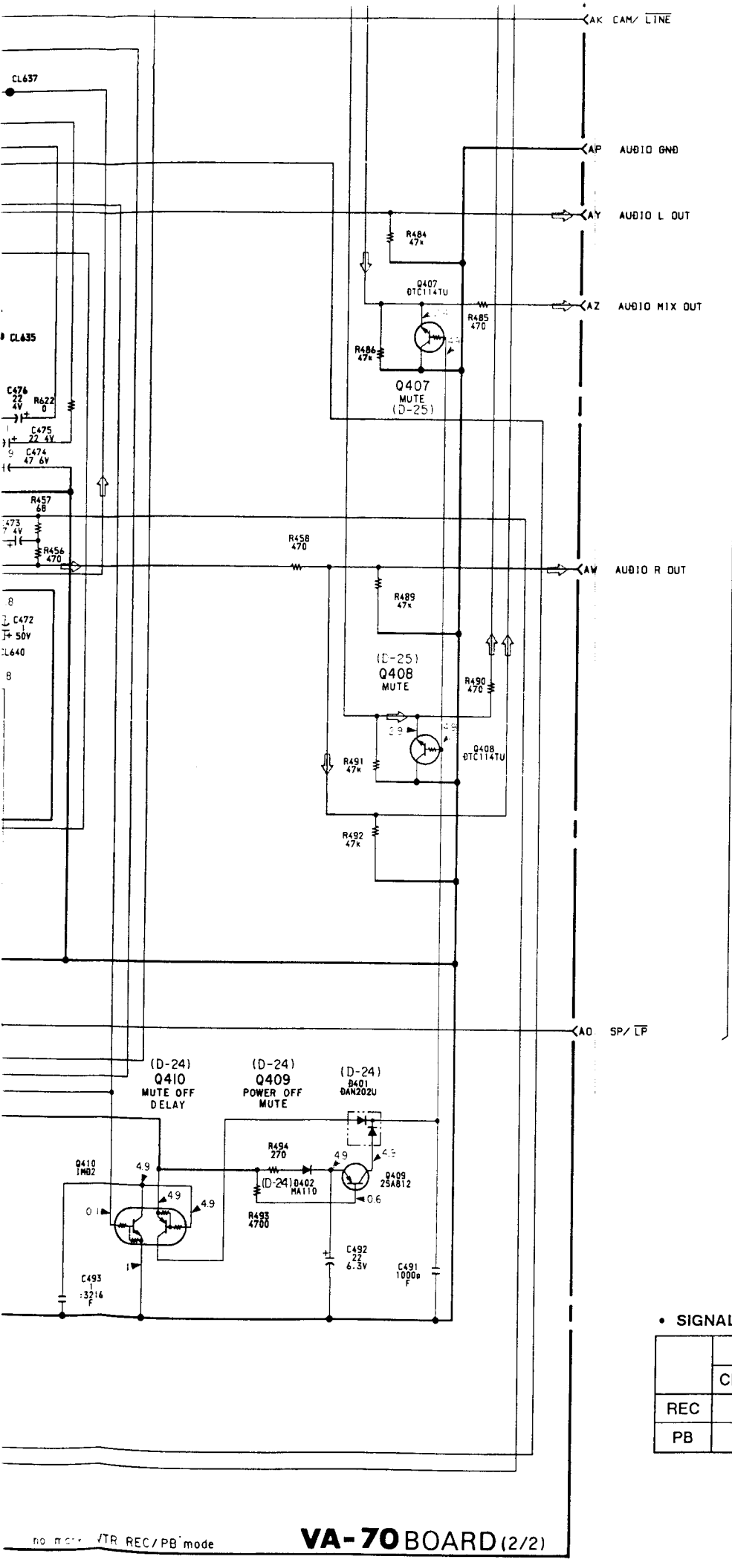

For Service Manuals Contact
MAURITRON TECHNICAL SERVICES
8 Cherry Tree Rd, Chinnor
Oxon OX9 4QY
Tel:- 01844-351694 Fax:- 01844-352554
Email:- enquiries@mauritron.co.uk

• **SIGNAL PATH**

	VIDEO SIGNAL			AUDIO SIGNAL
	CHROMA	Y	Y/CHROMA/DATA	
REC				➡
PB				⇨

no mark: VTR REC/PB mode

VA-70 BOARD (2/2)

— Ref. No. MC-82 BOARD: 2000 series, SW-175 BOARD: 2000 series —

For Service Manuals Contact
MAURITRON TECHNICAL SERVICES
8 Cherry Tree Rd, Chinnor
Oxon OX9 4QY
Tel:- 01844-351694 Fax:- 01844-352554
Email:- enquiries@mauritron.co.uk

* A-7062-784-A MC-82P BOARD, COMPLETE
****

< DIODE >

D652	8-719-106-43	DIODE	RD9.1M
D655	8-719-404-46	DIODE	MA110

< IC >

IC650	8-759-822-37	IC	LA7293M-TE-L
IC651	8-759-822-37	IC	LA7293M-TE-L

< TRANSISTOR >

Q650	8-729-109-44	TRANSISTOR	2SK94
Q651	8-729-905-35	TRANSISTOR	2SC4081
Q653	8-729-905-35	TRANSISTOR	2SC4081
Q654	8-729-905-12	TRANSISTOR	DTA144EU
Q655	8-729-905-12	TRANSISTOR	DTA144EU
Q656	8-729-109-44	TRANSISTOR	2SK94
Q657	8-729-905-35	TRANSISTOR	2SC4081
Q658	8-729-904-07	TRANSISTOR	FMG2-T-149
Q659	8-729-905-35	TRANSISTOR	2SC4081

MC-82 BOARD (COMP

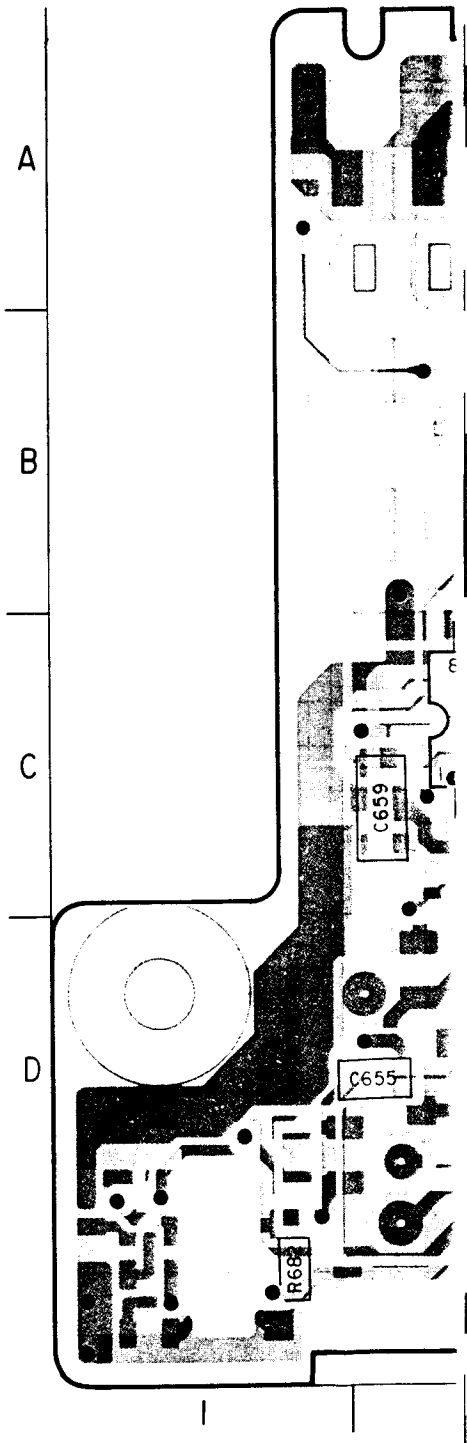

09

AUDIO AUI

SW-175 (CAMERA FUNCTION SWITCH) PRINTED WIRING BOARDS

RD: 2000 series, SW-175 BOARD: 2000 series —

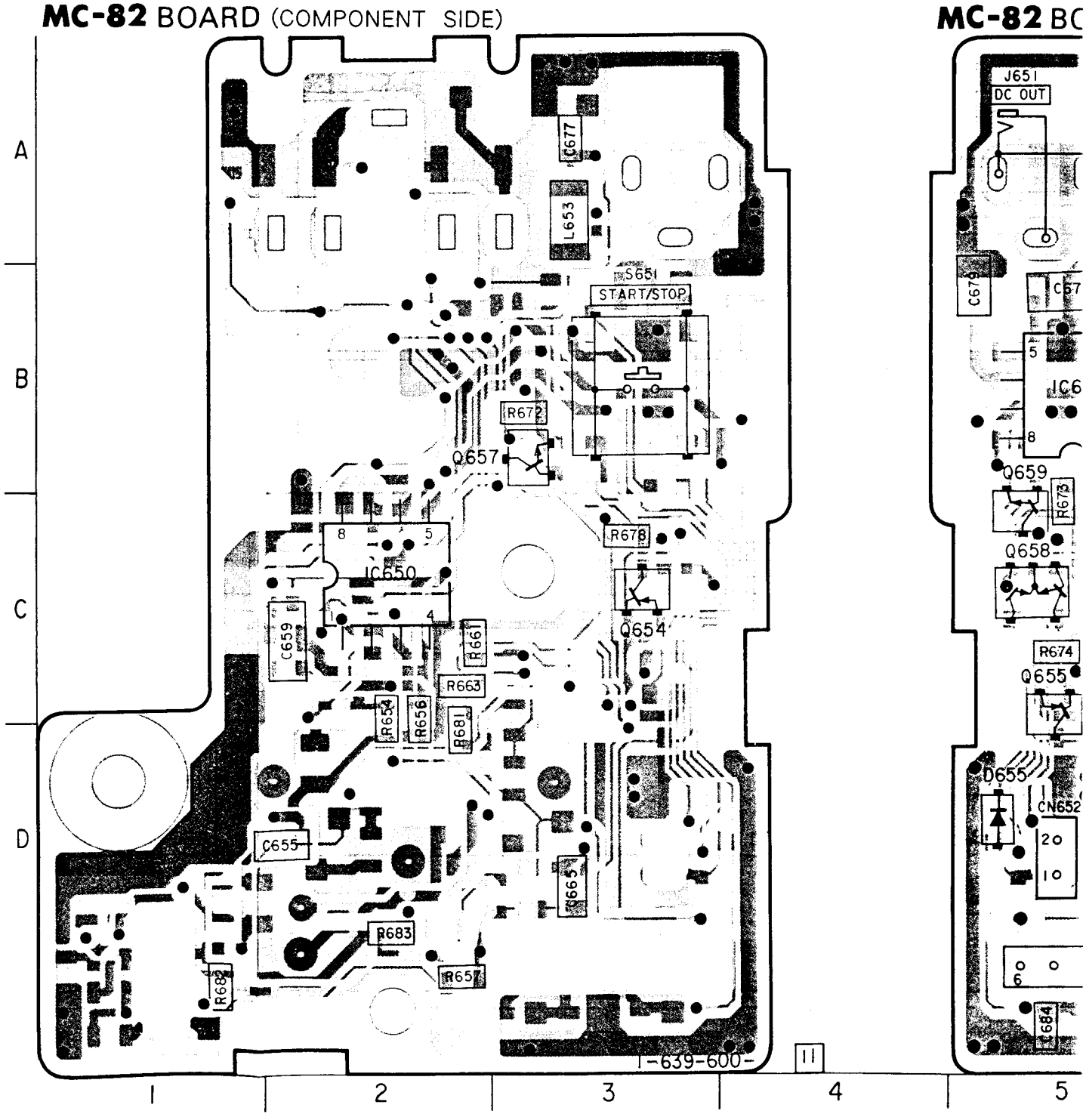

09

AUDIO AUDIO

SECTION 10
VIDEO BLOCK ADJUSTMENTS

During the adjustments, see the arrangement diagram for adjustment parts from page 306.

10-1. PRE-ADJUSTMENT PREPARATIONS (VIDEO BLOCK)

Use the following measuring instruments for adjustment of the VTR block.

10-1-1. Equipment to be Used

1) Monitor TV
2) Dual trace oscilloscope of over 20 MHz band, incorporates delay mode. (Use 10:1 probe unless otherwise specified.)
3) Frequency counter
4) Pattern generator with video output terminal
5) Digital voltmeter
6) Audio generator
7) Audio level meter
8) Audio distortion meter
9) Audio attenuator
10) Regulated power supply
11) Alignment tapes
    Tracking adjustment (WR5-1CP)
    Parts Code: 8-967-995-07
    Video frequency characteristics adjustment (WR5-6C)*1
    Parts Code: 8-967-995-17
    Operation check
    (WR5-4CL)*2
    Parts Code: 8-967-995-56
    (WR5-5CSP)*3
    Parts Code: 8-967-995-47
    AFM stereo operation check (WR5-9CS)
    Parts Code: 8-967-995-28
    Note: *1 WR5-2C (8-967-995-16) is also available.
    *2 WR5-3CL (8-967-995-36) is also available.
    *3 WR5-4CSP (8-967-995-46) is also available.
12) Adjustment remote controller (Modification of RM-95)
13) Extension code (20 PIN)
    Parts Code: J-6082-063B

10-1-2. Connection of Equipment

Unless otherwise specified, adjustments are made with the measuring instrument connected as shown in Fig. 10-1.

- Camera/video power switch ···· VTR (PLAYER) position
- REC mode (SP/LP) switch····· SP position

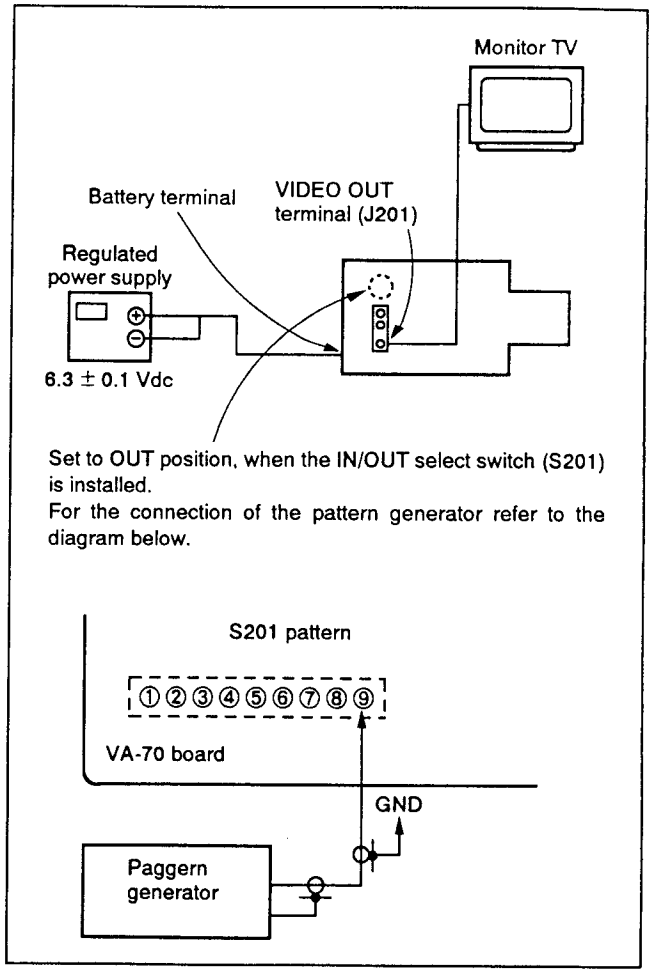

Fig. 10-1.

For Service Manuals Contact
MAURITRON TECHNICAL SERVICES
8 Cherry Tree Rd, Chinnor
Oxon OX9 4QY
Tel:- 01844-351694 Fax:- 01844-352554
Email:- enquiries@mauritron.co.uk

10-1-3. How to Set the REC Mode In the Model without REC Switch

1. REC key forbidden accept mode cancel
   1. Connect the adjustment remote controller to the REMOTE terminal.
   2. Turn on the power
   3. Turn on the HOLD switch of the adjustment remote controller.
   4. Select the page 1 address 00, and set the data to 01. (Protect mode cancel)
   5. Select the page D address 02, and set the data to 03. (REC key forbidden accept mode cancel)
   6. Press PAUSE button on the adjustment remote controller. (Write to the non-volatile memory)

The REC key is accepted through the above procedure. The adjustment remote controller may be removed, hereafter.

2. REC mode setting
   1. Connect the K OUT 3 pattern and K IN 3 pattern on VK-16P board with a jumper wire until the VTR is set to REC mode.

3. Procedure after completed the adjustment
   Be sure to return the mode to REC key forbidden accept mode after adjustment.
   1. Connect the adjustment remoter controller to the REMOTE terminal.
   2. Turn on the power.
   3. Turn on HOLD switch of the adjustment remote controller.
   4. Select the page 1 address 00, and set the data to 01. (Protect mode cancel)
   5. Select the page D address 02, and set the data to 02. (Setting of the REC key forbidden accept mode)
   6. Press PAUSE button of the adjustment remote controller. (Write to the non-volatile memory)

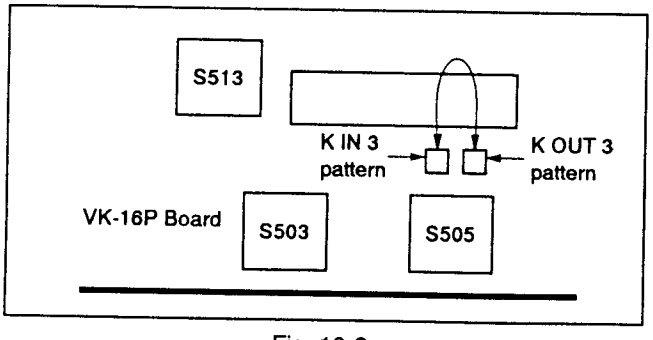

Fig. 10-2.

10-1-4. Note on Adjustments

The video block adjustment can be made without the camera block except "Battery Down Adjustment" of system control adjustment and "Switching position adjustment" of servo system adjustment. Remove the following three connectors in case of removing the camera block.

1. 2 PIN connector on CAMERA DC/DC convertor.
2. CN307 (4-pin) on VC-96 board
3. CN305 (12-pin) on VC-96 board

The cabinet (L) is not required for the video block adjustment. When removing the cabinet (L), remove the following connector.

1. CN601 (8-pin) on VA-70 board.
2. CN401 (6-pin) on VA-70 board.
3. CN503 (6-pin) on SS-136P board.

The cabinet (R) is not required for the video block adjustment. When removing the cabinet (R), remove the following connector.

1. CN501 (14-pin) on VK-16P board.

There is no problem even if the CT-40 board is removed when adjusting the video circuit. However, when adjusting the CT-40 board (digital titler/character generator circuit), use the extension cord (20-pin).

10-1-5. Set-up for Adjustment

Since the video signal obtained from the pattern generator is used as the adjusting signal for the electrical adjustment, this video output signal should meet the required specifications. Connect an oscilloscope to the VIDEO OUT terminal of the VA-70 board and make sure that the amplitude of the video SYNC signal is approximately 0.3V, that the amplitude of the video image is approximately 0.7V, that the burst signal amplitude is approximately 0.3V with flat characteristics, and that the signal level ratio between the burst signal and "Red" signal is 0.30:0.66. The video signal (color bars) used for VTR block electrical adjustment are shown in Fig. 10-3.

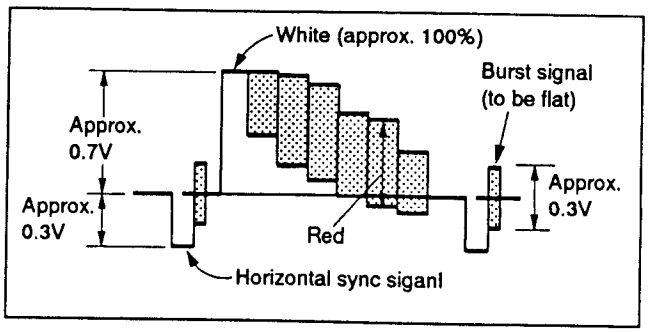

Fig. 10-3. Color bar signal of pattern generator

For Service Manuals Contact
MAURITRON TECHNICAL SERVICES
8 Cherry Tree Rd, Chinnor
Oxon OX9 4QY
Tel:- 01844-351694 Fax:- 01844-352554
Email:- enquiries@mauritron.co.uk

10-1-6. Alignment Tapes

The following alignment tapes are available.
Use the tape indicated in the signal column; however, in case there is no type indication in the signal column, use any tape for operation check.

Tape	REC mode	Type	Tape speed	Contents		Use
				Video area	PCM area	
Tracking WR5-1CP	L	MP	SP	CH2: 1 MHz tape pass adjustment signal		Tape pass adjustment
Video freq. characteristics WR5-6C	L	MP	LP	RF sweep: 0 to 10 MHz Marker: 1, 3.58, 5.5, 7MHz		Frequency characteristics adjustment
Operation check (SP mode) WR5-4CSP or WR5-5CSP	L	MP	SP	• Video signal Color bar: 4 min. Monoscope: 4 min. • Audio signal (AFM) 400 Hz, 60% modulation	• Audio signal (PCM) Monoscope: 20 Hz 20sec 400 Hz 20sec 14 kHz 20sec } Repeat four times. Color bar: 1 kHz 4 min.	Operation check
Operation check (LP mode) WR5-4CL	L	MP	LP	• Video signal Color bar: 4 min. Monoscope: 4 min. • Audio signal (AFM) 400 Hz, 60% modulation		
AFM stereo operation check WR5-9CS	L	MP	SP	• Video signal Color bar: 4 min. Monoscope: 4 min. • Audio signal (AFM) Stereo section (color bar) L ch: 400 Hz, R ch: 1 kHz (L+R: 1.5 MHz, ± 60 kHz DEV L–R: 1.7 MHz, ± 30 kHz DEV) Bilingual section (monoscope) MAIN: 400 Hz (1.5 MHz, ± 60 kHz DEV) SUB: 1 kHz (1.7 MHz, ± 30 kHz DEV)	• Audio signal (PCM) 400 Hz: 8 min.	AFM stereo operation check

Note: Recording mode
L ····· Conventional mode
E ····· Hi8 (high band) mode

Tape type
MP ····· Particle type metal tape
ME ····· Evaporated type metal tape

Table 10-1.

For Service Manuals Contact
MAURITRON TECHNICAL SERVICES
8 Cherry Tree Rd, Chinnor
Oxon OX9 4QY
Tel:- 01844-351694 Fax:- 01844-352554
Email:- enquiries@mauritron.co.uk

75% color bar signal recorded on an alignment tape is shown in Fig. 10-4.

Note: Measured at VIDEO OUT terminal. (75 Ω termination)

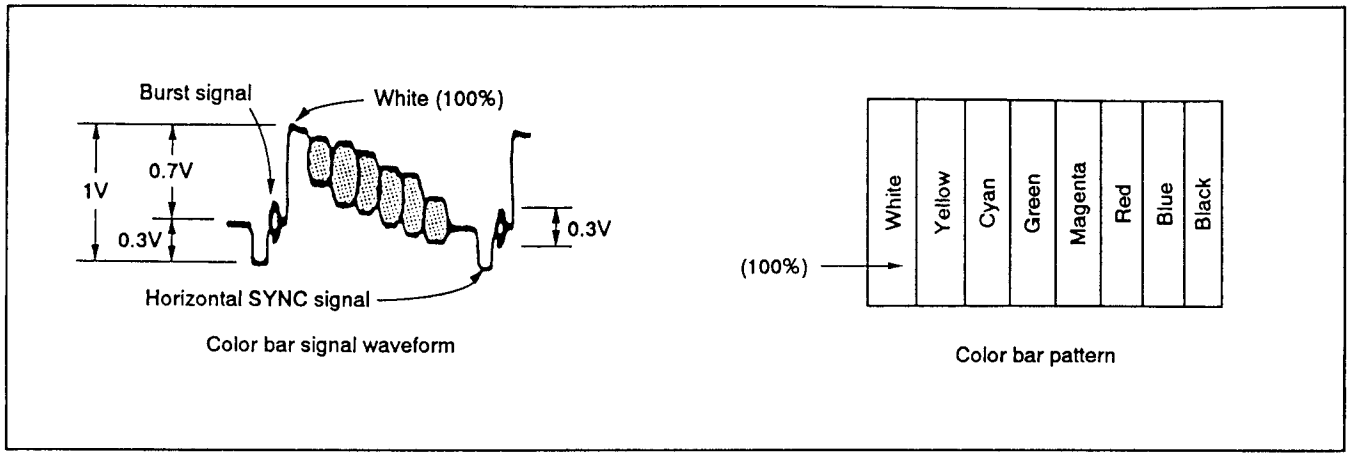

Fig. 10-4. Alignment tape color bar signal

10-1-7. I/O Level and Impedance

1. E, Australian model

[I/O level and Impedance]

Video input/output — phone jack
Input signal: 1 Vp-p, 75Ω unbalanced, negative sync

Audio input/output — phone jack
Input level: –7.5 dBs (0 dBs=0.775 Vrms)
Input impedance: More than 47 kΩ
Output level: –7.5 dBs (at output impedance 47 kΩ)
Output impedance: More than 2.2 kΩ

2. AEP, UK model

[I/O level and Impedance]

Video output — phone jack
Output signal: 1 Vp-p, 75Ω unbalanced, negative sync

Audio output — phone jack
Specified output: –7.5 dBs
Output impedance: More than 2.2 kΩ

For Service Manuals Contact
MAURITRON TECHNICAL SERVICES
8 Cherry Tree Rd, Chinnor
Oxon OX9 4QY
Tel:- 01844-351694 Fax:- **01844-352554**
Email:- enquiries@mauritron.co.uk

10-1-8. Service Mode

[Tansfer method of the service mode with the adjustment remote controller]

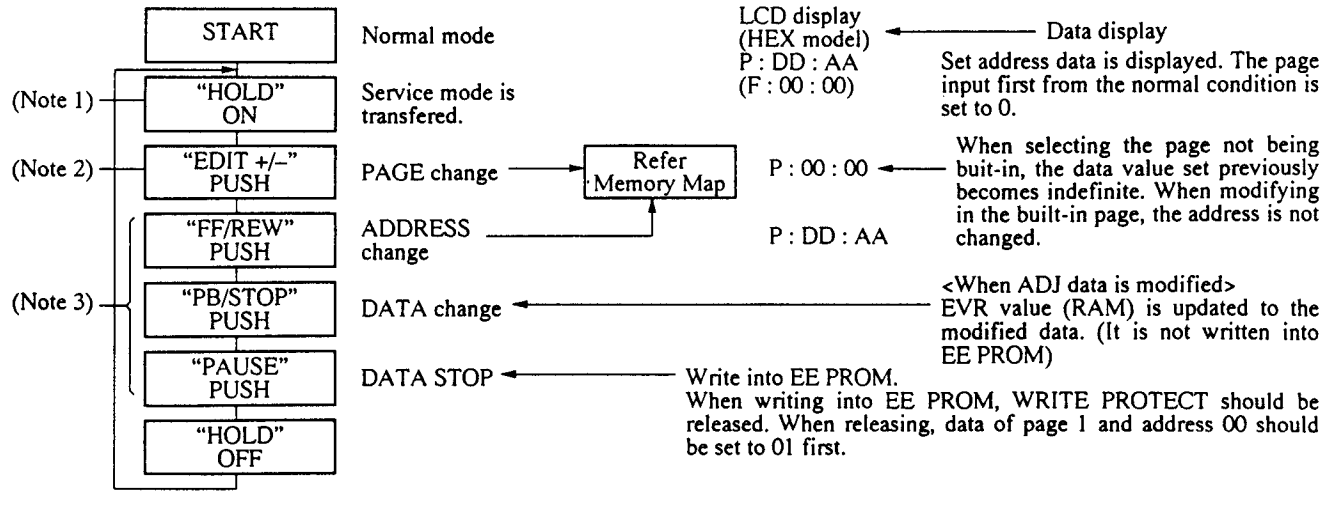

Command name	Command function	Function Button with the adjustment remote controller
Page Up	Page +1	Edit Search +
Page Down	Page –1	Edit Search –
Direct Page Set	Set to direct page	Event Clear
Address Up	Address +1	Fast Forward
Address Down	Address –1	Rewind
Data Up	Data +1	Play Back
Data Down	Data –1	Stop
Store	Write data into EEPROM. RAM	Pause

[ADJUST, TEST MODE description]

MODE		PAGE/DATA/ADDRESS	Contents
ADJUST	Switching Position Adjustment	D : – – : 04 (high) D : – – : 05 (low)	Switching position adjustment See to page 289 for details
	Battery Down Adjustment	D : – – : 06 (Sensor value) D : – – : 07 (Set value)	Use for battery down adjustment See to page 288 for details
TEST MODE	Pass Adjustment Truck Shift	1 : 30 : 4D	Truck shift for pass adjustment Set to the data described left and set the playback mode.
	Emergency Inhibit	1 : 10 : 4D	Detection of emergency is inhibited. Even if battery is ended, power is not turned off. SP/LP is not automatically distinguished. Emergency detection except for TAPE/TOP·END is inhibited.
	Emergency Code	D : – – : 20~22 D : – – : 24~26	First emergency is displayed. Last emergency is displayed. (※ See to 1)
	RECOG SW Check	1 : – – : 3D 1 : – – : 3E	Mode switch position is displayed. RECOG SW ON OFF is displayed. (※ See to 2)
	Function SW Check	1 : – – : E8~ED	Pressing KEY is checked. (※ See to 3)
	Motor single check	3 : 10 : DD (Loading Ⓜ) 3 : 11 : DD (Drum Ⓜ) 3 : 12 : DD (Capstan Ⓜ)	Rotating in right direction, inverting, stopping of each motor can be separately controlled. • Loading Motor • Drum Motor (※ See to 4) • Capstan Motor
	Sensor check	3 : 21 : DD	The following sensor is input by performing A/D converting, and the A/D converted value can be confirmed. TOP sensor, End sensor, S REEL FG, T REEL FG, Thermistor for SWP correction DEW sensor. (※ See to 5)
	Reception contents check of wireless remote control	1 : – – : 1E and 1D	The received code contents of the remote control code can be confirmed. (※ See to 6)

※1 Emergency Code Check
With the adjustment remote controller

(The emergency code has the first emergency and last emergency. The last emergency side is changed when emergency is generated; the first emergency side records the only code generated first.)

		First	Last	
PAGE D	ADDRESS	20, 21	24, 25	← Emergency code
PAGE D	ADDRESS	22	26	← Mode when emergency is generated

Displayed ➡ Be sure to rewrite the address from 20 to 26 to data 00 after the operation.

For Service Manuals Contact
MAURITRON TECHNICAL SERVICES
8 Cherry Tree Rd, Chinnor
Oxon OX9 4QY
Tel:- 01844-351694 Fax:- 01844-352554
Email:- enquiries@mauritron.co.uk

(1) Emergency code list

Code		Emergency contents
20H, 24H	21H, 25H	
00	00	Normal mode
01	00	Loading Motor emergency.
02	00	Unloading, Reel emergency.
04	00	Steady, Reel emergency.
08	00	Capstan emergency.
00	01	Drum steady, FG emergency.
00	02	Drum steady, PG emergency.
00	21	Drum steady, FG emergency.
00	22	Drum steady, PG emergency.
00	41	Loading, Drum FG emergency.
00	42	Loading, Drum PG emergency.
00	81	Unloading, Drum FG emergency.
00	82	Unloading, Drum PG emergency.
——	——	Drum steady Phase emergency.

- In order to delete the contents of [the first and the last emergency], write with adjustment remote controller as follows.

Page 1	Address 00	Data 01

After that, write data 00 into each address.
After writing, return to

Page 1	Address 00	Data 00

(2) Mode code

Mode	Code	Mode	Code
STOP	20	EDIT S CUE	5A
FF	30	EDIT S REV	5B
REW	38	EDIT S STIL	5F
PB	60	+×1	62
CUE	64	−×1	63
REV	65	−STILL	79
STILL	70	+FRAME	76
REC	40	−FRAME	77
REC. P	41	+×2	66
SHUTTLE EDIT (+)	5A	−×2	62
SHUTTLE EDIT (−)	5B	LOADING	21
CAM STBY	41	UNLOADING	13
CAM REC	40	EJECTED	10
REC REV+	58	+SLOW	72
REC REV−	59	−SLOW	73

For Service Manuals Contact
MAURITRON TECHNICAL SERVICES
8 Cherry Tree Rd, Chinnor
Oxon OX9 4QY
Tel:- 01844-351694 Fax:- **01844-352554**
Email:- enquiries@mauritron.co.uk

※2 RECOG SW Check

With the adjustment remote controller select page 1 and address 3D or 3E.

Page	Address	Bit 7	Bit 6	Bit 5	Bit 4	Bit 3	Bit 2	Bit 1	Bit 0
1	3D	MP-HG		ME/MP	REC PROOF		V MUTE	A MUTE JOG	VA PB MODE

"1"=REC inhibit
"1"=ME/ 0: MP
"1"=MPHG/ 0: Normal

Page	Address	Bit 7	Bit 6	Bit 5	Bit 4	Bit 3	Bit 2	Bit 1	Bit 0
1	3E	DEW			RP PB MODE	CASSETTE COMPART-MENT LOCK	MODE SW2	MODE SW1	MODE SW0

See to the following list

When locking the Cassette Compartment, "1"

- MODE SW CODE LIST

	Address 3E contents			Real port condition			Remark
Position	M SW2	M SW1	M SW0	M SW2	M SW1	M SW0	
EJECT	0	0	0	L	H	H	Cassette Compartment eject position
IA	0	0	1	H	H	H	Interval A
UNLOAD	0	1	0	L	L	H	Normal EJECT unloaded
IB	0	1	1	H	L	H	Interval B
STOP	1	0	0	H	L	L	STOP mode position
IC	1	0	1	H	H	L	Interval C
FWD	1	1	0	L	H	L	Pinch pressure welded
ID	1	1	1	L	L	L	Interval D
SHAKING HEAD POSITION	0	0	0	L	H	L	Shaking head position

☆ This mode releasing is turn off HOLD switch of the adjustment remote controller.

For Service Manuals Contact
MAURITRON TECHNICAL SERVICES
8 Cherry Tree Rd, Chinnor
Oxon OX9 4QY
Tel:- 01844-351694 Fax:- 01844-352554
Email:- enquiries@mauritron.co.uk

※ 3 Switch check (See to the previous page for reading code.)

With the adjustment remote controller:

Page 1	Address E8 to ED	Data Refer to table

Address	Bit 7	Bit 6	Bit 5	Bit 4	Bit 3	Bit 2	Bit 1	Bit 0
	K IN 7	K IN 6	K IN 5	K IN 4	K IN 3	K IN 2	K IN 1	K IN 0
E8 K OUT0	—	REMOTE ON/OFF	TITLE 2	TITLE 1	—	—	SHUTTER	AUTO LOCK
E9 K OUT1	—	STEREO	MEMORY	COLOR	DATA SCREEN	PUSH AUTO (FOCUS)	FOCUS	PROGRAM AE
EA K OUT2	—	SUB	EDIT (+)	EDIT (-)	FRAME	WHITE BALANCE	BACK LIGHT	—
EB K OUT3	—	STANDBY	PAUSE	RESET	REC	FADER	—	BUZZER
EC K OUT4	—	START/ STOP	PB	ZERO MEMORY	TIME	DATE	AGE	VTR
ED K OUT5	—	EDIT ON/OFF	REW	STOP	EJECT	FF	SLOW	CAM

☆ This mode releasing is turn off HOLD switch of the adjustment remote controller.

- Check the initial set value in shipping after the service, because EE PROM is monuted to VTR in this unit.
  D Page Initial set value in shipping (for this unit)

For Service Manuals Contact
MAURITRON TECHNICAL SERVICES
8 Cherry Tree Rd, Chinnor
Oxon OX9 4QY
Tel:- 01844-351694 Fax:- 01844-352554
Email:- enquiries@mauritron.co.uk

Address	Contens						Set value
00	Aging mode						00
01	Each flag area (destination/model/HEAD width 1×2 MUTE)						F8
02	VTR REC key acceptance authorization						02: AEP, UK model 03: other models
03							– –
04	Switching position (low)						Adjustment value
05	Switching position (high)						Adjustment value
06	Battery A/D modification value						Adjustment value
07	Battery end set area						Adjustment value
10	SR data storage area	EDIT OFF	MP	HI8	LP		– –
11	SR data storage area	EDIT OFF	MP	HI8	SP		– –
12	SR data storage area	EDIT OFF	MP	NOR	LP		16
13	SR data storage area	EDIT OFF	MP	NOR	SP		24
14	SR data storage area	EDIT OFF	ME	HI8	LP		– –
15	SR data storage area	EDIT OFF	ME	HI8	SP		– –
16	SR data storage area	EDIT OFF	ME	NOR	LP		16
17	SR data storage area	EDIT OFF	ME	NOR	SP		24
18	Titler vertical position adjustment area JOG mode						04
19	Titler vertical position adjustment area NOR mode						06
1A	Titler horizontal position adjustment area playback mode						11
1B	Titler horizontal position adjustment area EE mode						11
1C	When SR data storage area EDIT is ON: Hi8 mode						– –
1D	When SR data storage area EDIT is ON: Normal mode						24
1E							– –
1F							– –
20	First generated emergency code (low) (First emergency)						00
21	First generated emergency code (high) (First emergency)						00
22	Mode code when emergency is generated first						00
23							– –
24	Last generated emergency code (low) (Last emergency)						00
25	Last generated emergency code (high) (Last emergency)						00
26	Mode code when emergency is generated last.						00

For Service Manuals Contact
MAURITRON TECHNICAL SERVICES
8 Cherry Tree Rd, Chinnor
Oxon OX9 4QY
Tel:- 01844-351694 Fax:- 01844-352554
Email:- enquiries@mauritron.co.uk

※4 In order to operate the motor singly

[Operation]

Write the following data with the adjustment remote controller into | Page 3 | Address DD. |

Then the check of each motor is performed.

10H → Loading motor

11H → Drum motor

12H → Capstan motor

After the set of the above data, operation is performed by pressing the following keys. (When the operation is performed with the adjustment remote controller, set the HOLD switch to left and release the Service mode.)

FF key → Rotating in forward direction

REW key → Rotating in reverse direction

STOP key → Stop

Note) In this mode, operation is only performed on the normally loaded condition.

Note) The motor rotating speed is the normal rotating number. (Drum 25 Hz, Capstan SP mode speed, Loading normal speed.)

In order to release this mode, remove the adjustment remote controller and turn off the power.

※5 In order to read the A/D converted value (Sensor check)

[Operation]

With the adjustment remote controller.

Write | PAGE 3 | Address DD | Data 21 |

The following address (PAGE 3) of the A/D converted value of each A/D port is displayed.

Address	Selecting value Contents
65	TOP sensor (light ON)
67	TOP sensor (light OFF)
64	END sensor (light ON)
66	END sensor (light OFF)
62	S-REEL FG
63	T-REEL FG
60	Thermistor (for SWP correction)
5F	DEW sensor

The voltage of A/D converting 1 step: 4.9÷256 ≒ 19 mV

※6 In order to check the reception contents of the wireless remote control

With adjustment remote controller, the received wireless remote control code is displayed to | PAGE 1 | Address 1E. |

The wireless remote control code is only displayed while the code which the LANC code is shifted to right for 1 bit is pressed, and FF is displayed when the code is released.

The received category code of the wireless remote control is displayed to the upper 4 bit of | PAGE 1 | Address 1D. |

(The description of the wireless remote control code is omitted in this chart.)

10-2. POWER SUPPLY ADJUSTMENT

10-2-1. VIDEO 4.9V Adjustment (SS-136P Board)

Mode	Recording
Signal	Unnecessary
Measurement Point	Pin ⑲ of CN507 (VIDEO 4.9V)
Measuring Instrument	Digital voltmeter
Adjusting Element	RV902
Specified Value	4.90 ± 0.05 Vdc

Adjusting method:

1) Adjust to 4.90 ± 0.05 Vdc with RV902.

10-2-2. Oscillation Frequency Adjustment (SS-136P Board)

Mode	Recording
Signal	Unnecessary
Measurement Point	Q903 collector
Measuring Instrument	Frequency counter
Adjusting Element	RV901
Specified Value	475 ± 5 kHz

Adjusting method:

1) Adjust to 475 ± 5 kHz with RV901.

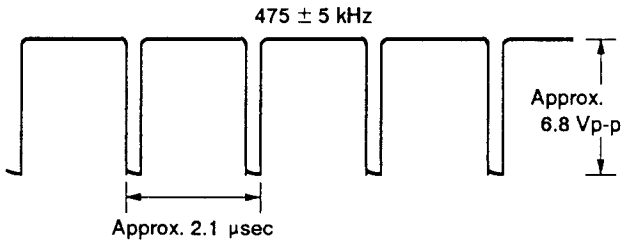

Fig. 10-5.

For Service Manuals Contact
MAURITRON TECHNICAL SERVICES
8 Cherry Tree Rd, Chinnor
Oxon OX9 4QY
Tel:- 01844-351694 Fax:- 01844-352554
Email:- enquiries@mauritron.co.uk

10-2-3. Power Supply Voltage Check (SS-136P Board)

Measuring Instrument	Digital voltmeter
SS 4.9V check	
Measurement Point	Pin ① of CN506
Specified Value	4.90 ± 0.15 Vdc
AUDIO 4.9V check	
Measurement Point	Pin ⑦ of CN506
Specified Value	4.90 ± 0.15 Vdc
EVF 4.9V check	
Measurement Point	Pin ① of CN503
Specified Value	4.90 ± 0.15 Vdc
LM 5V check	
Measurement Point	Pin ⑮ of CN502
Specified Value	4.85 ± 0.15 Vdc

Checking method:

1) Each power supply voltage should satisfy the specified values at normal temperature and humidity.

For Service Manuals Contact
MAURITRON TECHNICAL SERVICES
8 Cherry Tree Rd, Chinnor
Oxon OX9 4QY
Tel:- 01844-351694 Fax:- 01844-352554
Email:- enquiries@mauritron.co.uk

10-3. SYSTEM CONTROL SYSTEM ADJUSTMENT

10-3-1. Battery Down Adjustment

Mode	CAMERA REC
Signal	Unnecessary
Adjustment Page	D
Adjustment Address	06

Connection:

1) Make this adjustment with MIC board, EVF board, and CAMERA block connected.
2) Connect the adjustment remote controller to the REMOTE terminal.
3) Connect the digital voltmeter so to measure the voltage of the regurated power supply unit connected to the battery terminal.

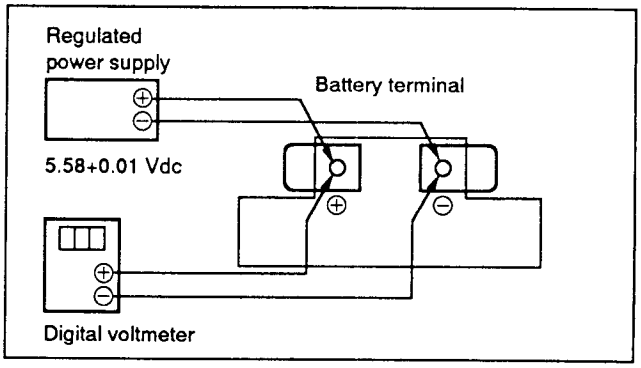

Fig. 10-6.

Adjusting method:

1) Set the POWER switch to CAMERA position.
2) Adjust the output voltage of the regurated power supply unit to be 6.3 ± 0.1 Vdc.
3) Set up the CAMERA REC mode.
4) Set the HOLD switch of the adjustment remote controller to the HOLD side.
5) Adjust the output voltage of the regurated power supply unit to be 5.58 ± 0.01 Vdc (battery terminal voltage).
6) Press once the EDIT SEARCH (+) button of the adjustment remote controller to select page 1.
7) Select address 00 with the adjustment remote controller and set the data to 01. (Release the protector.)
8) Press four times the EDIT SEARCH (–) button of the adjustment remote controller. (Set the adjustment page to D.)
9) Select address 06 and press the PAUSE button of the adjustment remote controller (Store the reference value in the memory.)

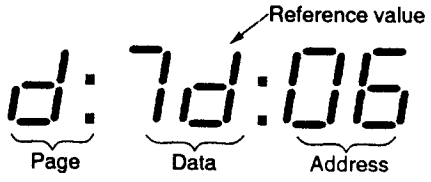

10) Turn off the POWER switch.

Checking method:
Remove the adjustment remote controller and check the following points. If the required conditions are not obtained, repeat the adjustments again.

1) Adjust the output voltage of the regulated power supply so that the digital voltmeter reading becomes 6.30 ± 0.01 Vdc. (VTR in camera recording mode)
2) Confirm that the mark is not lit on the EVF (viewfinder) screen (TALLY lamp is lit).
3) Lower the output voltage of the regulated power supply so that the digital voltmeter reading becomes 5.66 ± 0.01 Vdc.
4) Confirm that the mark and the TALLY lamp are flashing in approx. 1 sec intervals on the EVF screen. (mark should not be blinking.)
5) Lower the output voltage of the regulated power supply so that the digital voltmeter reading becomes 5.58 ± 0.01 Vdc.
6) Confirm that the flashing interval of the mark and the TALLY lamp on the EVF screen becomes shorter, and that the VTR stops and the power is turned off.

10-3-2. Clock Accuracy Adjustment (FU-104 Board)

Mode	E-E
Signal	Unnecessary
Measurement Point	Pin ⑥⑨ of IC501
Measuring Instrument	Frequency countor
Adjusting Element	CT501
Specified Value	512.000 ± 0.001 Hz

Note: Use a 10 : 1 probe for connecting the frequency counter.

Adjusting method:
1) Adjust to 512.000 ± 0.001 Hz with CT501.

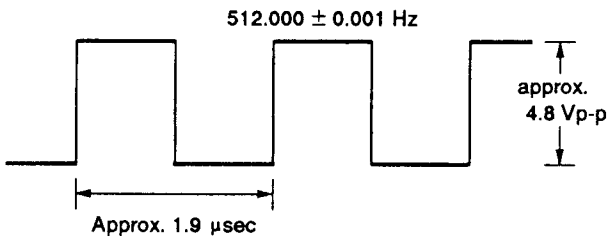

Fig. 10-7.

For Service Manuals Contact
MAURITRON TECHNICAL SERVICES
8 Cherry Tree Rd, Chinnor
Oxon OX9 4QY
Tel:- 01844-351694 Fax:- 01844-352554
Email:- enquiries@mauritron.co.uk

10-4. SERVO SYSTEM ADJUSTMENT

10-4-1. Switching Position Adjustment (SS-136P Board)

Mode	Playback
Signal	Alignment tape : Operation check (WR5-1CP)
Measurement Point	CH1: CN508 pin ④ (D SWP) CH2: CN508 pin ③ (PB RF)
Measuring Instrument	Oscilloscope
Adjustment Page	D
Adjustment Address	05 04
Specified Value	t=0 ± 10 µsec

Adjusting method:
1) Set the HOLD switch of the adjustment remote controller to the HOLD side. (ADJUST MODE is set.)
2) Select page 1 and address 00 with the adjustment remote controller and set the data to 01. (Protector is released.)

3) Press four times the EDIT SEARCH (–) button of the adjustment remote controller. (Adjustment page D is set.)
4) Change the data at address 05 (for coarse adjustment) and minimize "t".
5) Press the PAUSE button of the adjustment remote controller to store the data in the memory.
6) Change the data at address 04 (for fine adjustment) and adjust to t=0 ± 10 µsec.
7) Press the PAUSE button of the adjustment remote controller
8) Turn off the POWER switch.

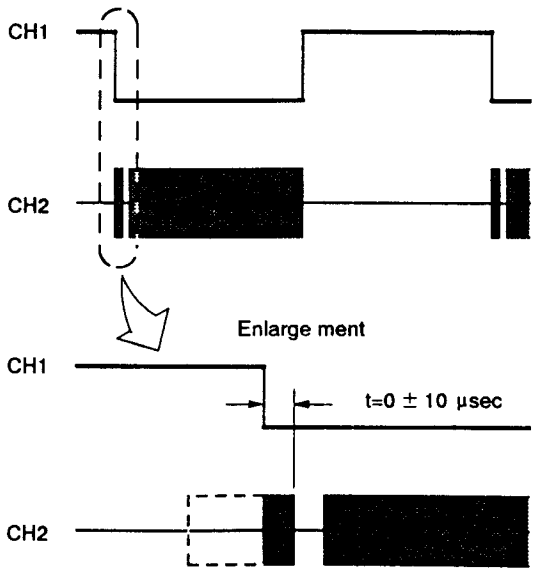

Fig. 10-8.

10-5. VIDEO BLOCK ADJUSTMENTS

The adjustment of the video system should in principle follow the adjustment procedure outlined below.
The color video signal supplied from the pattern generator is utilized as the video input signal for the video system adjustment in the recording mode. Make sure that the sync signal and the color burst signal match the specifications given in Set-up for adjustment, as shown in Fig. 10-3.

[Adjustment procedure]

1) Playback frequency characteristics adjustment
2) Crystal oscillator fo adjustment
3) REC EE level adjustment
4) IR adjustment
5) Chroma comb filter adjustment
6) Emphasis Y level adjustment
7) PB CCD input level adjustment
8) PB Y level adjustment
9) Y FM carrier frequency adjustment
10) Y FM deviation adjustment
11) Chroma emphasis fo adjustment
12) REC C RF level adjustment
13) REC Y level adjustment
14) REC ATF level checking

For Service Manuals Contact
MAURITRON TECHNICAL SERVICES
8 Cherry Tree Rd, Chinnor
Oxon OX9 4QY
Tel:- 01844-351694 Fax:- 01844-352554
Email:- enquiries@mauritron.co.uk

10-5-1. Playback Frequency Characteristics Adjustment (RP-77 Board)

1. CH1, CH2 adjustment

Note: The adjusting element for CH2 is shown in parentheses [ ].

Mode	Playback
Signal	Alignment tape: For frequency characteristics adjustment (WR5-6C)
Measurement Point	CH1: Pin ③ [Pin ③] of CN508 on SS-136P board EXT TRIG: Pin ④ of CN508 on SS-136P board
Measuring Instrument	Oscilloscope TRIG SLOPE: +, [–]
Adjusting Element	RV102 [RV101]
Specified Value	3.58 MHz level : 5.5 MHz level =4 : (3 ± 0.3)

Adjusting method:

1) Adjust RV102 [RV101] so that the ratio of the 3.58 MHz level to the 5.5 MHz level of the PB RF output waveform becomes 4: (3 ± 0.3) .

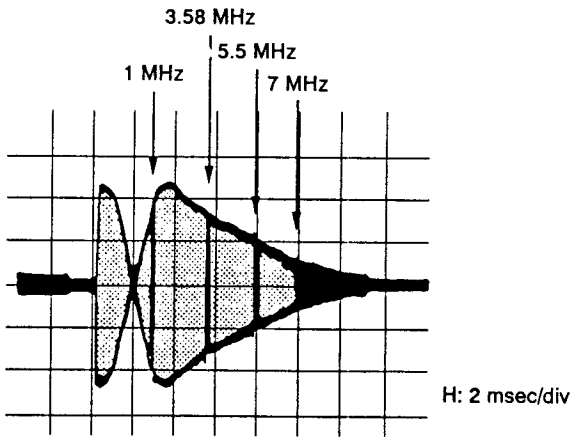

Fig. 10-9.

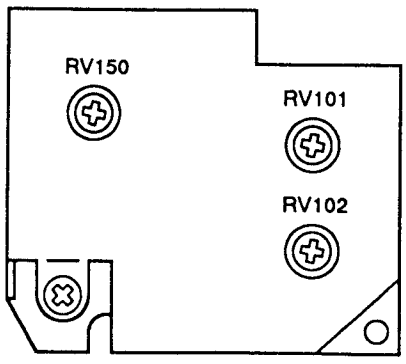

Fig. 10-10.

2. CH1' adjustment

Mode	Playback (CH1' playback mode)
Signal	Alignment tape: For frequency characteristics adjustment (WR5-6C)
Measurement Point	CH1: Pin ③ of CN508 on SS-136P board EXT TRIG: Pin ④ of CN508 on SS-136P board
Measuring Instrument	Oscilloscope TRIG SLOPE: –
Adjusting Element	RV150
Specified Value	3.58 MHz level : 5.5 MHz level =4 : (3 ± 0.3)

Adjusting method:

1) Connect the adjustment remote controller to REMOTE terminal (J901 on SW-175P board).
2) Set the HOLD switch of the adjustment remote controller to the on position.
3) Select the page 1 and the address 4D with the adjustment remote controller, and set the data to 20.
   (CH1' playback mode setting)
4) Adjust RV150 so that the ratio of the 3.58 MHz level to the 5.5 MHz level of the PB RF output waveform becames 4: (3 ± 0.3)
5) Remove the adjustment remote controller.

10-5-2. Crystal Oscillator fo Checking (VA-70 Board)

Mode	E-E
Signal	Color bar
Measurement Point	Pin ⑫ of IC203
Measuring Instrument	Frequency counter
Specified Value	4433619 ± 70 Hz

Checking method:

1) Confirm that the oscillation frequency at Pin ⑫ of IC203 is 4433619 ± 70 Hz.

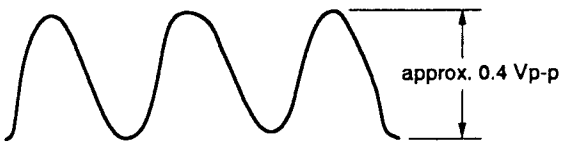

(4433619 ± 70 Hz)

Fig. 10-11. Crystal oscillator fo adjustment

10-5-3. REC EE LEVEL Adjustment (VA-70 Board)

Mode	E-E
Signal	Color bar
Measurement Point	VIDEO OUT terminal (J201)
Measuring Instrument	Oscilloscope
Adjusting Element	RV205
Specified Value	1.00 ± 0.025 Vp-p

Note: Terminate VIDEO OUT terminal (J201) at 75Ω .

Adjusting method:

1) Adjust RV205 for 1.00 ± 0.025 Vp-p.

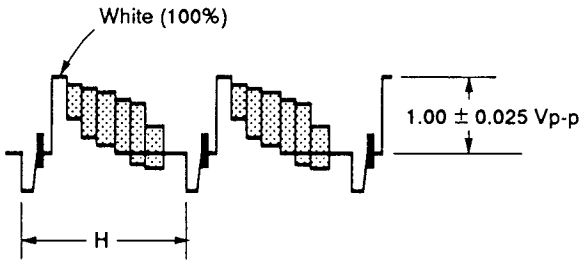

Fig. 10-12.

For Service Manuals Contact
MAURITRON TECHNICAL SERVICES
8 Cherry Tree Rd, Chinnor
Oxon OX9 4QY
Tel:- 01844-351694 Fax:- 01844-352554
Email:- enquiries@mauritron.co.uk

10-5-4. IR Adjustment (VA-70 Board)

Mode	E-E
Signal	Color bar
Measurement Point	Pin ⑦ of IC201
Measuring Instrument	Oscilloscope
Adjusting Element	RV201
Specified Value	Minimum red residual chroma component (80 mVp-p or less)

Connections:

1) Connect TP003 (Pin ⑭ of IC201) and TP007 (Pin ㊶ of IC201) with a jumper wire.

Adjusting Method:

1) Minimize the red residual chroma component with RV201.
2) After the adjustment, remove the jumper wire.

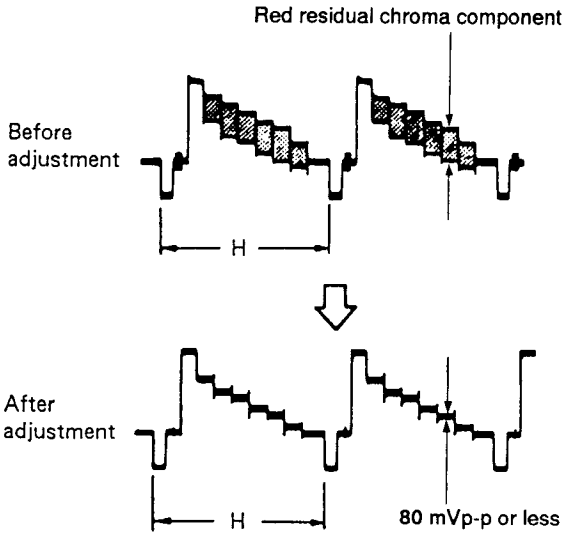

Fig. 10-13.

10-5-5. Chroma Comb Filter Adjustment (VA-70 Board)

Mode	E-E
Signal	Color bar
Measurement Point	Pin ⑪ of IC201
Measuring Instrument	Oscilloscope
Adjusting Element	RV204 RV211
Specified Value	Minimum red residual chroma component

Adjusting method:

1) Adjust RV204 and RV211 alternately and minimize the red residual chroma component.

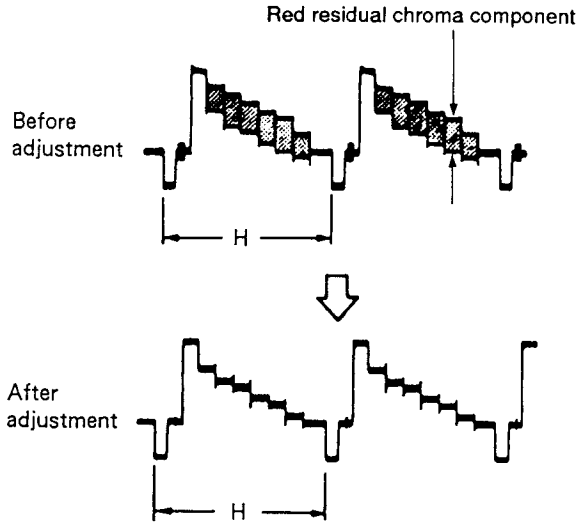

Fig. 10-14.

For Service Manuals Contact
MAURITRON TECHNICAL SERVICES
8 Cherry Tree Rd, Chinnor
Oxon OX9 4QY
Tel:- 01844-351694 Fax:- 01844-352554
Email:- enquiries@mauritron.co.uk

10-5-6. Emphasis Y Level Adjustment (VA-70 Board)

Mode	E-E
Signal	Color bar
Measurement Point	Pin ③ of IC201
Measuring Instrument	Oscilloscope
Adjusting Element	RV202
Specified Value	0.50 ± 0.025 Vp-p

Adjusting method:

1) Adjust RV202 for 0.50 ± 0.025 Vp-p.

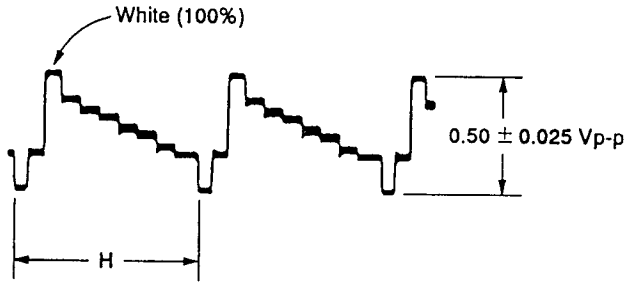

Fig. 10-15.

10-5-7. PB CCD Input Level Adjustment (VA-70 Board)

Mode	Playback
Signal	Alignment tape: For operation checking (WR5-5CSP) color bar section
Measurement Point	Pin ㉑ of IC201
Measuring Instrument	Oscilloscope
Adjusting Element	RV210
Specified Value	0.50 ± 0.025 Vp-p

Adjusting method:

1) Adjust RV210 for 0.50 ± 0.025 Vp-p.
2) Be sure to perform "PB Y level adjustment" after this adjustment.

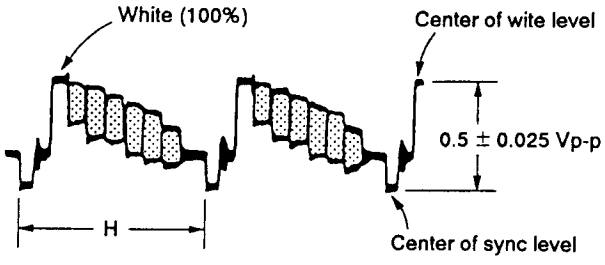

Fig. 10-16.

10-5-8. PB Y Level Adjustment (VA-70 Board)

Mode	Playback
Signal	Alignment tape: For operation checking (WR5-5CSP) Color bar section
Measurement Point	VIDEO OUT terminal (J201)
Measuring Instrument	Oscilloscope
Adjusting Element	RV203
Specified Value	1.00 ± 0.05 Vp-p

Note: 1) Terminate VIDEO OUT terminal (J201) at 75Ω .
2) Make sure that "PB CCD Input Level Adjustment" has been completed.

Adjusting method:

1) Adjust RV203 for 1.00 ± 0.05 Vp-p.

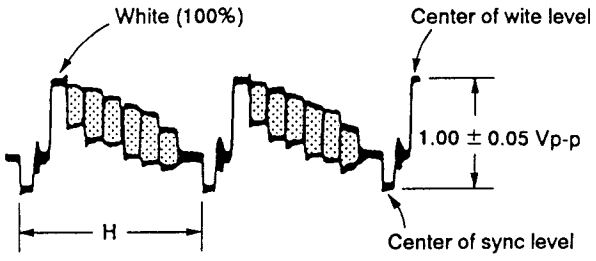

Fig. 10-17.

For Service Manuals Contact
MAURITRON TECHNICAL SERVICES
8 Cherry Tree Rd, Chinnor
Oxon OX9 4QY
Tel:- 01844-351694 Fax:- 01844-352554
Email:- enquiries@mauritron.co.uk

10-5-9. Y FM Carrier Frequency Adjustment (VA-70 Board)

Mode	E-E
Signal	No signal
Measurement Point	R158 side terminal of RV101
Measuring Instrument	Frequency counter
Adjusting Element	RV207
Specified Value	4.38 ± 0.04 MHz

Adjusting method:

1) Adjust RV207 for 4.38 ± 0.04 MHz.
2) Perform "Y FM Deviation Adjustment".
3) Make this adjustment again after completing "Y FM Deviation Adjustment".

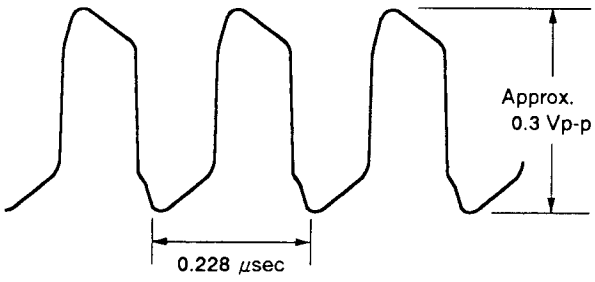

Fig. 10-18.

10-5-10. Y FM Deviation Adjustment (VA-70 Board)

Mode	Recording and playback
Signal	Color bar
Measurement Point	VIDEO OUT terminal (J201)
Measuring Instrument	Oscilloscope
Adjusting Element	RV206
Specified Value	Playback level is 1.00 ± 0.05 Vp-p

Note: 1) Confirm that "Emphasis Y Level Adjustment", "PB Y Level Adjustment" and "Y FM Carrier Frequency Adjustment" have been completed.
2) Terminate VIDEO OUT terminal (J201) at 75Ω.

Adjusting method:

1) Record the color bar signal.
2) Playback the recorded signal.
3) Confirm the playback output.
   Specified value: 1.00 ± 0.05 Vp-p
4) If not meet the specified value, repeat 1) to 3) after turning RV206 in the following manner.

	Rotation direction of RV206
When larger than specified value	Clockwise (↻)
When smaller than specified value	Counterclockwise (↺)

Table 10-2.

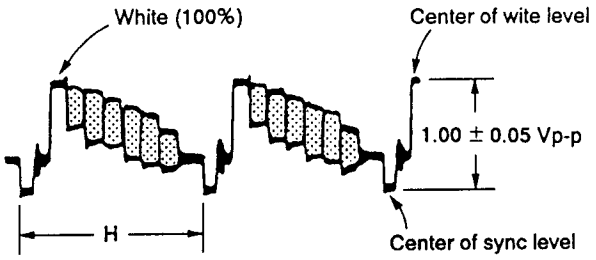

Fig. 10-19. Y FM deviation adjustment

For Service Manuals Contact
MAURITRON TECHNICAL SERVICES
8 Cherry Tree Rd, Chinnor
Oxon OX9 4QY
Tel:- 01844-351694 Fax:- 01844-352554
Email:- enquiries@mauritron.co.uk

10-5-11. Chroma Emphasis fo Adjustment (VA-70 Board)

Mode	E-E
Signal	Color bar
Measurement Point	Pin ㉔ of IC203
Measuring Instrument	Oscilloscope
Adjusting Element	FL302
Specified Value	Minimum fo component

Adjusting method:

1) Adjust FL302 so that the amplitude of flat red portion of the chroma signal becomes minimum.

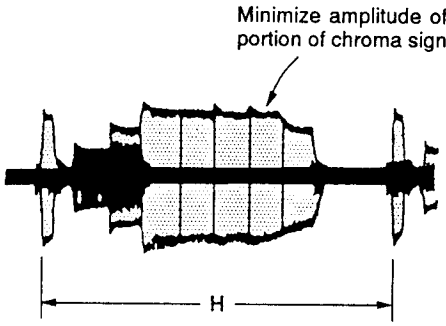

Fig. 10-20.

10-5-12. REC C RF Level Adjustment (VA-70 Board)

Mode	E-E
Signal	Color bar
Measurement Point	Pin ① of CN507
Measuring Instrument	Oscilloscope
Adjusting Element	RV301
Specified Value	110 ± 10 mVp-p

Adjusting method:

1) Adjust RV301 so that the amplitude of flat red portion of the chroma signal becomes 110 ± 10 mVp-p.

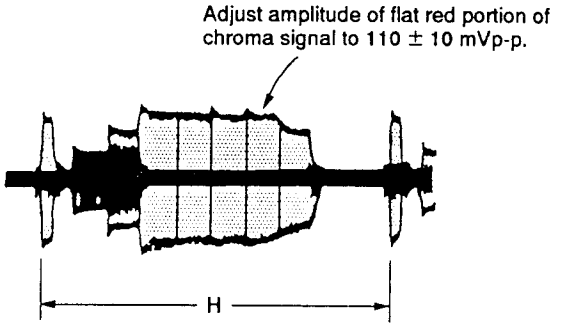

Fig. 10-21.

10-5-13. REC Y Level Adjustment (VA-70 Board)

Mode	E-E
Signal	No signal
Measurement Point	Pin ⑤ of CN507
Measuring Instrument	Oscilloscope 20 MHz BAND WIDTH LIMITER: ON
Adjusting Element	RV101
Specified Value	230 ± 10 mVp-p

Note: Be sure to use MP type tape.
(Pin ⑩ of CN507 should be "L".)

Adjusting method:

1) Adjust RV101 for 230 ± 10 mVp-p.

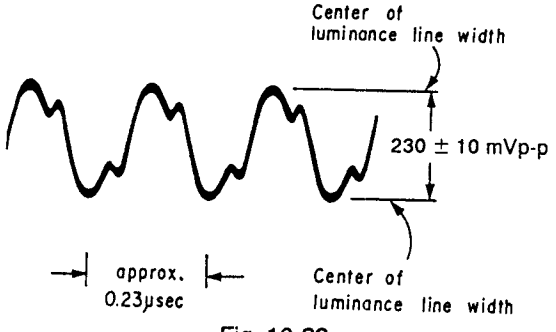

Fig. 10-22.

For Service Manuals Contact
MAURITRON TECHNICAL SERVICES
8 Cherry Tree Rd, Chinnor
Oxon OX9 4QY
Tel:- 01844-351694 Fax:- 01844-352554
Email:- enquiries@mauritron.co.uk

10-5-14. REC ATF Level Checking (SS-136P Board)

Mode	Recording
Signal	No signal
Measurement Point	Pin ㉑ of CN501
Measuring Instrument	Oscilloscope
Specified Value	710 ± 90 mVp-p

Checking method:

1) Confirm that the REC ATF signal level is 710 ± 90 mVp-p.

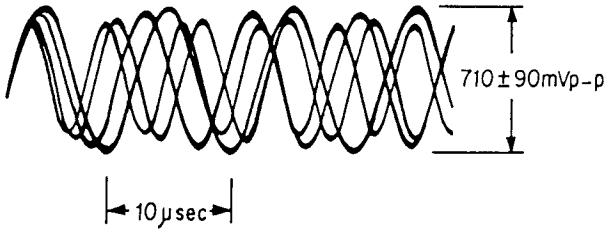

Fig. 10-23.

10-5-15. Quasi Burst Phase Adjustment (VA-70 Board) (Method using vectorscope)

Mode	Playback and playback pause
Signal	Alignment tape for operation check (WR5-5CSP) Color bar section
Measurement Point	VIDEO OUT terminal (J201)
Measuring Instrument	Vectorscope
Adjusting Element	RV353
Specified Value	± 45°

Connection:

1) Input 4.43 MHz signal from pin ⑫ of IC203 to CH1 input of the oscilloscope.
2) Connect CH1 output of the oscilloscope to the EXT. subcarrier reference input of the vectorscope.
3) Turn on the EXT. subcarrier switch of the vectorscope.

Adjusting method:

1) Playback the color bar section.
2) Adjust the burst phase to ± 45° with PHASE knob of the vectorscope.
3) Set up playback pause mode.
4) Adjust the burst phase to ± 45° with RV353.

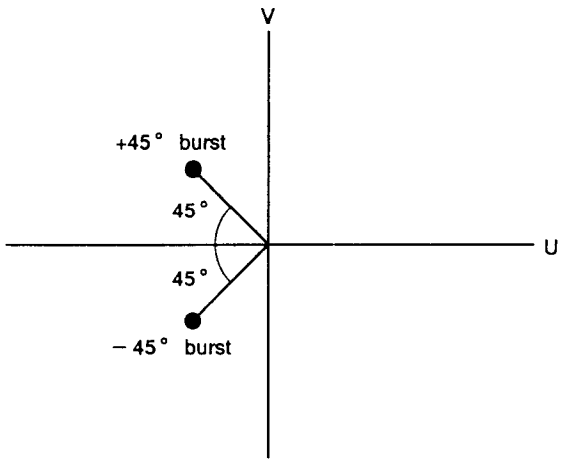

Fig. 10-24.

For Service Manuals Contact
MAURITRON TECHNICAL SERVICES
8 Cherry Tree Rd, Chinnor
Oxon OX9 4QY
Tel:- 01844-351694 Fax:- 01844-352554
Email:- enquiries@mauritron.co.uk

10-5-16. Delay Burst Phase Adjustment (VA-70 Board) (Method using vectorscope)

Mode	Playback pause
Signal	Alignment tape: For operation check (WR5-5CSP) Color bar section
Measurement Point	VIDEO OUT terminal (J201)
Measuring Instrument	Vectorscope
Adjusting Element	RV351
Specified Value	Minimum shaking of yellow and blue luminance points

Adjusting method:

1) Minimize the shaking of yellow and blue luminance points with RV351.

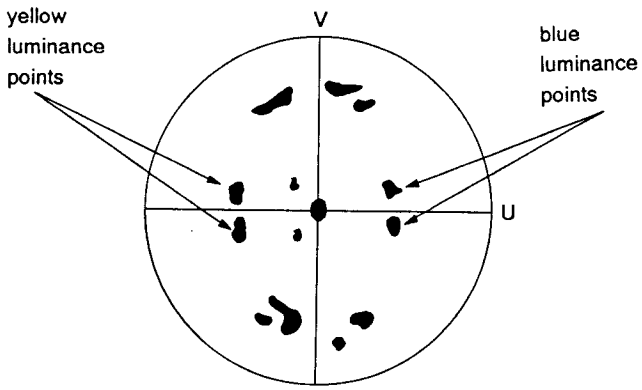

Fig. 10-25.

10-5-17. Quasi Burst Phase Adjustment (VA-70 Board) (Method using monitor TV)

Mode	Playback
Signal	Alignment tape for operation check (WR5-5CSP) Color bar section
Measurement Point	Confirmation on monitor TV screen
Measuring Instrument	
Adjusting Element	RV353
Specified Value	Minimum chroma flickering

Connection:

1) Connect Pin ㉑ of IC204 and collector of Q353 using a diode (1SS119, etc.).

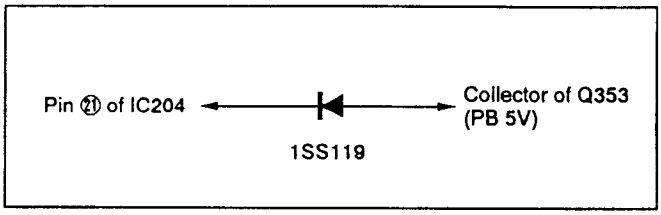

Fig. 10-26.

Adjusting method:

1) Observe the monitor screen. If color is abnormal, stop the unit and then set the playback mode again.
2) Set the monitor color level to maximum and its bright level to minimum.
3) Rotate RV353 fully in the clockwise direction (↻).
4) Turn RV353 slowly counterclockwise and stop where chroma flicker is minimum and horizontal black stripes are least visible.
5) Remove the diode.

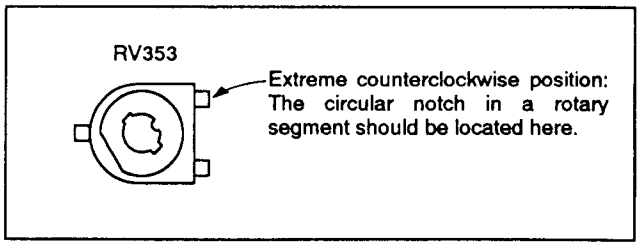

Fig. 10-27.

For Service Manuals Contact
MAURITRON TECHNICAL SERVICES
8 Cherry Tree Rd, Chinnor
Oxon OX9 4QY
Tel:- 01844-351694 Fax:- 01844-352554
Email:- enquiries@mauritron.co.uk

10-5-18. Delay Burst Phase Adjustment (VA-70 Board) (Method using monitor TV)

Mode	Playback pause
Signal	Alignment tape for operation check (WR5-5CSP) Color bar section
Measurement Point	Confirmation on monitor TV screen
Measuring Instrument	
Adjustment Element	RV351
Specified Value	Minimum chroma flickering

Adjust method:

1) Set the monitor TV color level to maximum and its bright level to minimum.
2) Minimize chroma flicker with RV351 so that horizontal black stripes cannot longer be seen.

10-6. CHARACTER GENERATOR ADJUSTMENTS

Connect 20-pin extension cord between CN705 on the CT-40 board and CN703 on the VA-70 board.

10-6-1. Character Generator SG Frequency Adjustment (CT-40 Board)

Mode	E-E
Signal	Non-signal
Measurement Point	Pin ⑲ of IC902
Measuring Instrument	Frequency counter
Adjustment Element	CT902
Specified Value	15625 ± 100 Hz

Adjusting method:

1) Adjust to 15625 ± 100 Hz with CT902.

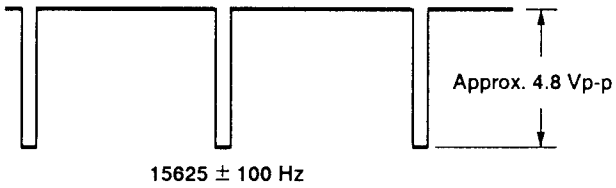

Fig. 10-28.

For Service Manuals Contact
MAURITRON TECHNICAL SERVICES
8 Cherry Tree Rd, Chinnor
Oxon OX9 4QY
Tel:- 01844-351694 Fax:- 01844-352554
Email:- enquiries@mauritron.co.uk

10-6-2. DDS Character Position Adjustment (CT-40 Board)

Mode	Playback
Signal	Alignment tape: For operation checking (WR5-5CSP) Color bar section
Measurement Point	Confirmed on monitor TV
Measuring Instrument	
Adjustment Element	CT901

Adjusting method:

1) Press DATA SCREEN button and confirm that the tape counter is displayed on the monitor TV screen.
2) Adjust CT901 until the right inner contour of the number at right side of the tape counter indication is line up with the border line between the blue and black color bars.

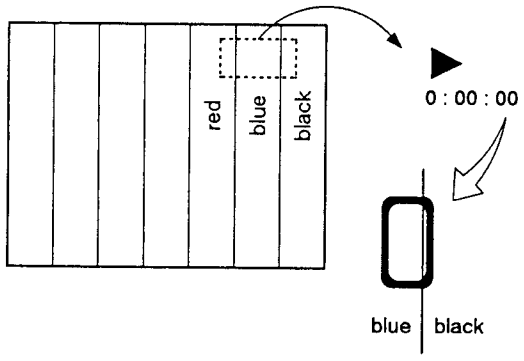

Fig. 10-29.

10-7. AUDIO SYSTEM ADJUSTMENTS

- Perform adjustment with the color bar signal used as the video input signal.

[Connection of audio measuring instruments]

In addition to the video system measuring instruments, connect the audio system measuring instruments as shown in the Fig. 10-30, and set the power switch to VTR (PLAYER) position for adjustment.

Unless otherwise specified, set the bilingual switch (S500 on the VA-70 board) to the following position.

- Green (stereo) position

Note: 1) Unless otherwise specified, input the same signal to both channel of L and R when input a audio signal.

2) Be sure to insert plug (shorting plug or dummy plug, etc.) into AUDIO OUT R terminal. If not, the mode will be monaural and an appropriate adjustment can not be performed.
(Monaural mode)
When recording····· REC AFM RF 1.7 MHz carrier is not output.
REC matrix is off.

3) In adjustments which is performed for both R and L channels, the adjusting element for R channel is shown in brackets [ ].

4) When performing the adjustment in the CAMERA mode (the camera block should be connected), disconnect CN401 on VA-70 board and input the audio signal to Pins ② (MIC IN L) and ④ (MIC IN R) of CN401. The reference input level is –34.5 dBs. And a resistor of about 1 kΩ is required to connect Pins ⑤ (MIC ST/$\overline{\text{MONO}}$) and ① (AUDIO 4.9V) of CN401.

For Service Manuals Contact
MAURITRON TECHNICAL SERVICES
8 Cherry Tree Rd, Chinnor
Oxon OX9 4QY
Tel:- 01844-351694 Fax:- 01844-352554
Email:- enquiries@mauritron.co.uk

• Connection of the audio level meter or distortion meter

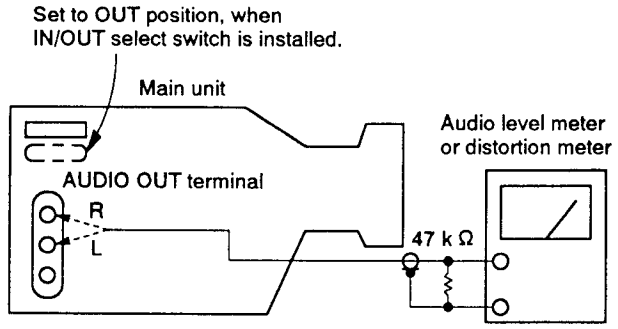

• Connection of the audio oscillator and attenuator

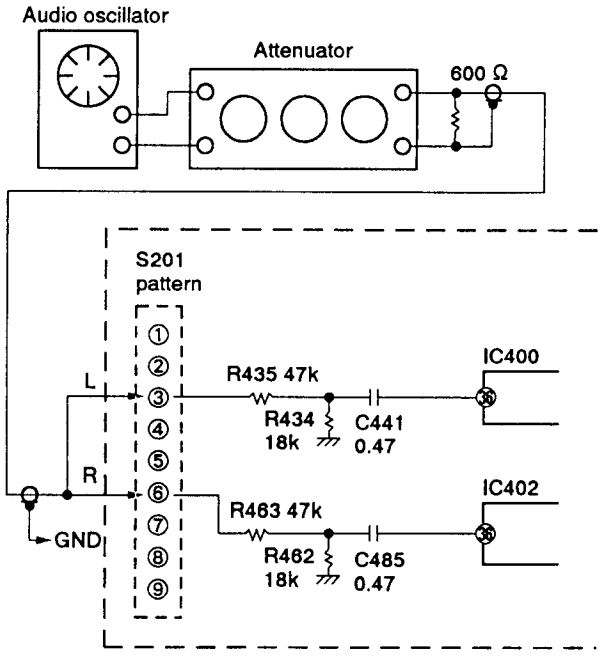

Note: Mount R434, 435, 462, 463, C441, 485 in AEP, UK model.

Fig. 10-30.

[Adjustment procedure]

1) IR adjustment
2) 1.5 MHz carrier frequency check
3) 1.7 MHz carrier frequency check
4) 1.5 MHz recording level adjustment
5) 1.7 MHz recording level adjustment
6) E-E output level check
7) REC matrix L–R adjustment
8) REC matrix L+R check
9) 1.5 MHz deviation adjustment
10) 1.7 MHz deviation adjustment
11) PB matrix adjustment
12) Overall level characteristics, separation check
13) Overall distortion check
14) Overall noise level check

10-7-1. IR Adjustment (VA-70 Board)

Mode	Playback
Signal	Alignment tape: for AFM stereo operation check (WR5-9CS) Bilingual (monoscope) section
Measurement Point	1. Pin ⑥ and ㊹ of IC400 2. Pin ⑥ and ㊹ of IC402
Measuring Instrument	Digital voltmeter
Adjustment Element	1. RV400 (1.5IR) 2. RV404 (1.7IR)
Specified Value	0 ± 10 mVdc

Adjusting method:

• 1.5 IR adjustment

1) Connect the digital voltmeter to Pin ㊹ of IC400 and read the DC voltage level. (Approx. 2100 mVdc)
2) Connect the digital voltmeter to Pin ⑥ of IC400.
3) Adjust RV400 so that the voltage level at Pin ⑥ of IC400 becomes the same as Pin ㊹ of IC400. (Tolerance level= ± 10 mVdc)

• 1.7 IR adjustment

4) Connect the digital voltmeter to Pin ㊹ of IC404 and read the DC voltage level. (Approx. 2100 mVdc)
5) Connect the digital voltmeter to Pin ⑥ of IC404.
6) Adjust RV404 so that the voltage level at Pin ⑥ of IC404 becomes the same as Pin ㊹ of IC404. (Tolerance level= ± 10 mVdc)

For Service Manuals Contact
MAURITRON TECHNICAL SERVICES
8 Cherry Tree Rd, Chinnor
Oxon OX9 4QY
Tel:- 01844-351694 Fax:- 01844-352554
Email:- enquiries@mauritron.co.uk

10-7-2. 1.5 MHz Carrier Frequency Check (VA-70 Board)

Mode	Recording
Signal	Non-signal
Measurement Point	Pin ⑧ of IC400
Measuring Instrument	Frequency counter
Specified Value	1.500 ± 0.002 MHz

Note: Use a 10:1 probe for connecting the frequency counter.

Checking method:

1) Confirm that the carrier frequency is 1.500 ± 0.002 MHz.

10-7-3. 1.7 MHz Carrier Frequency Check (VA-70 Board)

Mode	Recording
Signal	Non-signal
Measurement Point	Pin ⑧ of IC402
Measuring Instrument	Frequency counter
Specified Value	1.700 ± 0.002 MHz

Note: Use a 10:1 probe for connecting the frequency counter.

Checking method:

1) Confirm that the carrier frequency is 1.700 ± 0.002 MHz.

For Service Manuals Contact
MAURITRON TECHNICAL SERVICES
8 Cherry Tree Rd, Chinnor
Oxon OX9 4QY
Tel:- 01844-351694 Fax:- 01844-352554
Email:- enquiries@mauritron.co.uk

10-7-4. 1.5 MHz Recording Level Adjustment (VA-70 Board)

Mode	Recording
Signal	Non-signal
Measurement Point	Pin ② of CN507
Measuring Instrument	Oscilloscope
Adjustment Element	RV406
Specified Value	90 ± 10 mVp-p

Connections:

1) Connect Collector of Q413 and GND with a jumper wire.

Checking method:

1) Adjust RV406 so that the 1.5 MHz REC AFM RF signal level becames 90 ± 10 mVp-p.
   (Read the center level of the luminance line width.)

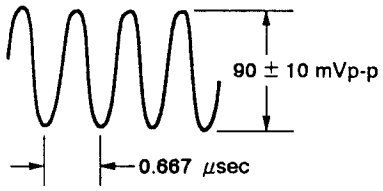

Fig. 10-31.

10-7-5. 1.7 MHz Recording Level Adjustment (VA-70 Board)

Mode	Recording
Signal	Non-signal
Measurement Point	Pin ② of CN507
Measuring Instrument	Oscilloscope
Adjustment Element	RV407
Specified Value	72 ± 10 mVp-p

Connections:

1) Connect Pin ⑧ of IC400 and GND with 0.01 μF capacitor.

Checking method:

1) Confirm that the shorting plug is inserted into AUDIO OUT R (red) terminal.
2) Adjust RV407 so that the 1.7 MHz REC AFM RF signal level becames 72 ± 10 mVp-p. (Read the center level of the luminance line width.)

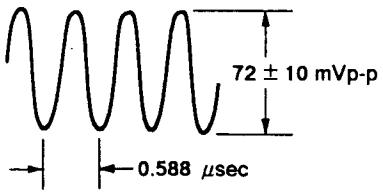

Fig. 10-32.

10-7-6. E-E Output Level Check (VA-70 Board)

Mode	Recording
Signal	400 Hz, –7.5dBs : Pin ③ and Pin ⑥ of S201 pattern (AUDIO IN L and R)
Measurement Point	AUDIO OUT L [R] terminal
Measuring Instrument	Audio level meter
Specified Value	–7.5 ± 2 dBs

Note: Insert a plug to AUDIO OUT R terminal

Checking method:

1) Confirm that the 400 Hz signal level is –7.5 dBs.

10-7-7. REC Matrix L–R Adjustment (VA-70 Board)

Mode	Recording
Signal	400 Hz, –7.5dBs : Pin ③ and Pin ⑥ of S201 pattern (AUDIO IN L and R)
Measurement Point	Pin ③ of IC401
Measuring Instrument	Oscilloscope
Adjusting Element	RV402
Specified Value	0 ± 5 mVp-p

Note: 1) Use a 1:1 probe.
2) Insert any plug to AUDIO OUT R terminal.

Checking method:

1) Adjust RV402 so that the 400 Hz signal level is 0 ± 5 mVp-p.

For Service Manuals Contact
MAURITRON TECHNICAL SERVICES
8 Cherry Tree Rd, Chinnor
Oxon OX9 4QY
Tel:- 01844-351694 Fax:- 01844-352554
Email:- enquiries@mauritron.co.uk

10-7-8. REC Matrix L+R Check (VA-70 Board)

Mode	Recording
Signal	1. 400 Hz, –7.5 dBs: Pin ③ of S201 pattern (AUDIO IN L) 2. 400 Hz, –7.5 dBs: Pin ⑥ of S201 pattern (AUDIO IN R)
Measurement Point	Pin ㉕ of IC401
Measuring Instrument	Oscilloscope
Specified Value	The level difference between L input and R input is 0 ± 10 mVp-p.

Note: 1) When measuring signal level at Pin ㉕ of IC401, start measuring 1 minute after the signal input. (To stabilize AGC)
2) Insert any plug to AUDIO OUT R terminal.

Checking method:

1) Input 400 Hz, –7.5 dBs signal only to Pin ③ of S201 pattern.
2) Read the signal level at Pin ㉕ of IC401 and make a note of it. (Approx. 200 mVp-p)
3) Input 400 Hz, –7.5 dBs signal only to Pin ⑥ of S201 pattern.
4) Confirm that the level at Pin ㉕ of IC401 is [the level measured in step 2] ± 10 mVp-p.

10-7-9. 1.5 MHz Deviation Adjustment (VA-70 Board)

Mode	Playback
Signal	Alignment tape: for operation check (WR5-5CSP)
Measurement Point	AUDIO OUT terminal
Measuring Instrument	Oscilloscope
Adjusting Element	RV401 (1.5 DEV)
Specified Value	–7.5 ± 0.5 dBs

Switch setting:

- Bilingual switch (S400 on the VA-70 board).....Main

Adjusting method:

1) Adjust RV401 so that the 400 Hz signal level becomes –7.5 dBs.

10-7-10. 1.7 MHz Deviation Adjustment (VA-70 Board)

Mode	Playback
Signal	Alignment tape: for AFM stereo operation check (WR5-9CS) Bilingual (monoscope) section
Measurement Point	1. Pin ㉗ of IC401 2. Pin ① of IC401
Measuring Instrument	Oscilloscope
Adjusting Element	RV405 (1.7 DEV)
Specified Value	400 Hz level: 1 kHz level= 8 : (7.5 ± 0.05)

Adjusting method:

1) Connect the probe of oscilloscope to Pin ㉗ of IC401.
2) Adjust VOLT/DIV knob of the oscilloscope so that the signal level of 400 Hz becomes 8 division.
3) Disconnect the probe and connect to Pin ① of IC401.
4) Adjust RV405 so that the signal level of 1 kHz becomes 7.5 division.

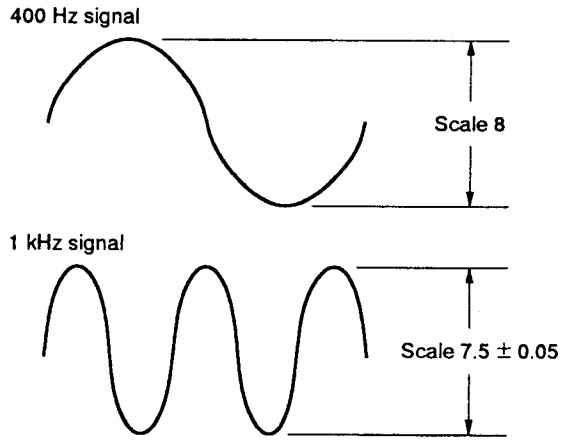

Fig. 10-33.

10-7-11. PB Matrix Adjustment (VA-70 Board)

1. PB Matrix L Adjustment

Mode	Self-recording/playback
Signal	Non signal: Pin ③ of S201 pattern (AUDIO IN L) 400 Hz, –7.5 dBs: Pin ⑥ of S201 pattern (AUDIO IN R)
Measurement Point	AUDIO OUT L terminal
Measuring Instrument	Oscilloscope
Adjusting Element	RV403
Specified Value	400 Hz crosstalk signal level is 0 ± 10 mVp-p

Note: Insert any plug to AUDIO OUT R terminal.

Adjusting method:

1) Input 400 Hz, –7.5 dBs audio signal only to Pin ⑥ of S201 pattern.
2) Record it.
3) Playback the recorded section.
4) Adjust with RV403 so that the 400 Hz crosstalk signal level becomes minimum.

2. PB Matrix R Check

Mode	Self-recording/playback
Signal	400 Hz, –7.5 dBs: Pin ③ of S201 (AUDIO IN L) Non signal: Pin ⑥ of S201 (AUDIO IN R)
Measurement Point	AUDIO OUT R terminal
Measuring Instrument	Oscilloscope
Specified Value	400 Hz crosstalk signal level is 0 ± 20 mVp-p

Note: Insert any plug to AUDIO OUT R terminal.

Checking method:

1) Input 400 Hz, –7.5 dBs audio signal only to Pin ③ of S201 pattern.
2) Record it.
3) Playback the recorded section.
4) Confirm that the 400 Hz crosstalk signal level is 0 ± 20 mVp-p.

For Service Manuals Contact
MAURITRON TECHNICAL SERVICES
8 Cherry Tree Rd, Chinnor
Oxon OX9 4QY
Tel:- 01844-351694 Fax:- 01844-352554
Email:- enquiries@mauritron.co.uk

10-7-12. Overall Level Characteristics, Separation Check (VA-70 Board)

Mode	Self-recording and playback
Signal	400 Hz, –7.5 dBs: Pin ③ [Pin ⑥] of S201 pattern Non-signal : Pin ⑥ [Pin ③] of S201 pattern
Measurement Point	AUDIO OUT R and L terminals
Measuring Instrument	Audio level meter
Specified Value	Signal level: –7.5 ± 2 dBs Crosstalk level: –27.5 dBs or less

Note: 1) Be sure to insert any plug into AUDIO OUT R terminal when recording.
2) Confirm that the bilingual switch (S400 on the VA-70 board) is set on the green (stereo) position.

Checking method:
1) Record the signal.
2) Play back the recorded portion.
3) Confirm that the output level of AUDIO OUT L[R] terminal is –7.5 ± 2 dBs.
4) Confirm that the output level of AUDIO OUT R[L] terminal is –27.5 dBs or less.

10-7-13. Overall Distortion Check (VA-70 Board)

Mode	Self-recording and playback
Signal	400 Hz, –7.5 dBs Pin ③ and ⑥ of S201 pattern
Measurement Point	AUDIO OUT L [R] terminal
Measuring Instrument	Distortion meter
Specified Value	0.8% or less *1

Checking method:
1) Record the signal.
2) Play back the recorded portion.
3) Confirm that the distortion is less than 0.8%. *1
*1: Value when a distortion measuring filter (Fig. 10-34.) is used. Less than 1.0% when no filter is used.

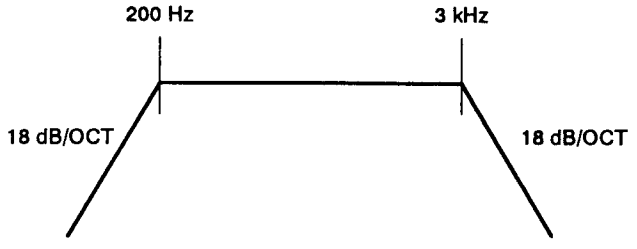

Fig. 10-34.

10-7-14. Overall Noise Level Check (VA-70 Board)

Mode	Self-recording and playback
Signal	Non-signal: Pin ③ and ⑥ of S201 pattern
Measurement Point	AUDIO OUT L [R] terminal
Measuring Instrument	Audio level meter
Specified Value	Less than –61 dBs

Checking method:
1) Record the signal
2) Play back the recorded portion.
3) Confirm that the noise level is less than –61 dBs. *1
*1: Value when the A curve auditory correction filter is used.

For Service Manuals Contact
MAURITRON TECHNICAL SERVICES
8 Cherry Tree Rd, Chinnor
Oxon OX9 4QY
Tel:- 01844-351694 Fax:- 01844-352554
Email:- enquiries@mauritron.co.uk

10-8. ARRANGEMENT DIAGRAMS FOR ADJUSTMENT PARTS

SS-136 BOARD (COMPONENT SIDE)

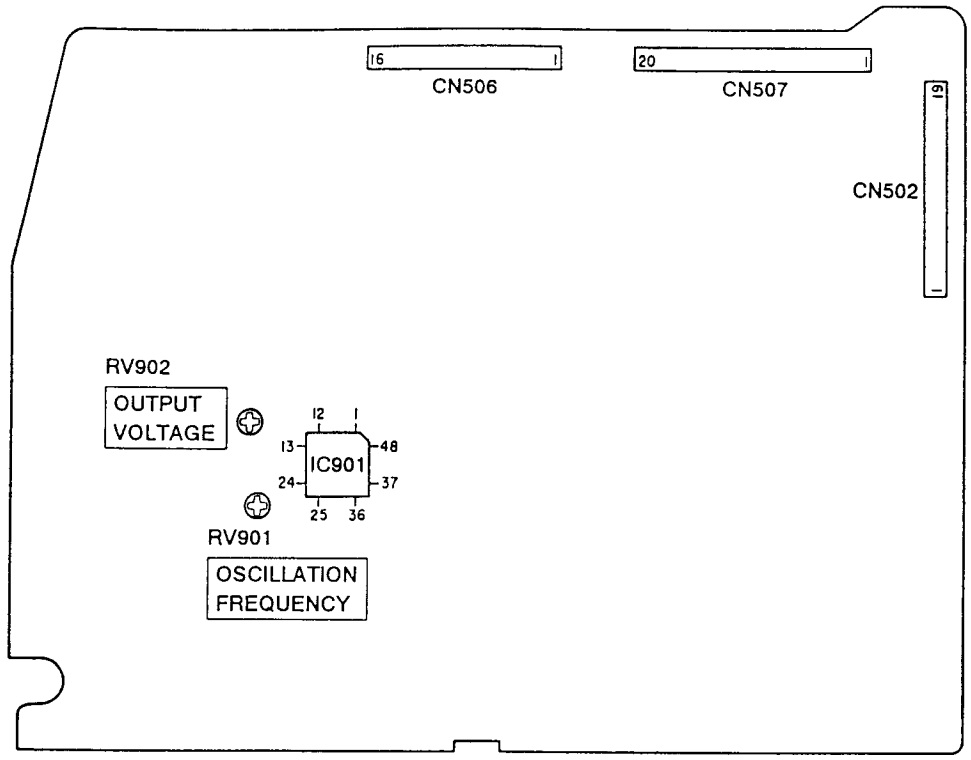

FU-104 BOARD (COMPONENT SIDE)

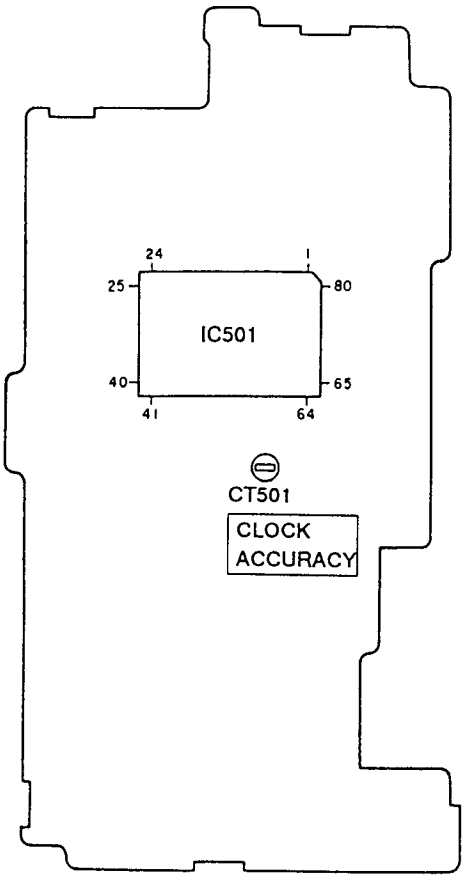

For Service Manuals Contact
MAURITRON TECHNICAL SERVICES
8 Cherry Tree Rd, Chinnor
Oxon OX9 4QY
Tel:- 01844-351694 Fax:- 01844-352554
Email:- enquiries@mauritron.co.uk

VA-70 BOARD (COMPONENT SIDE)

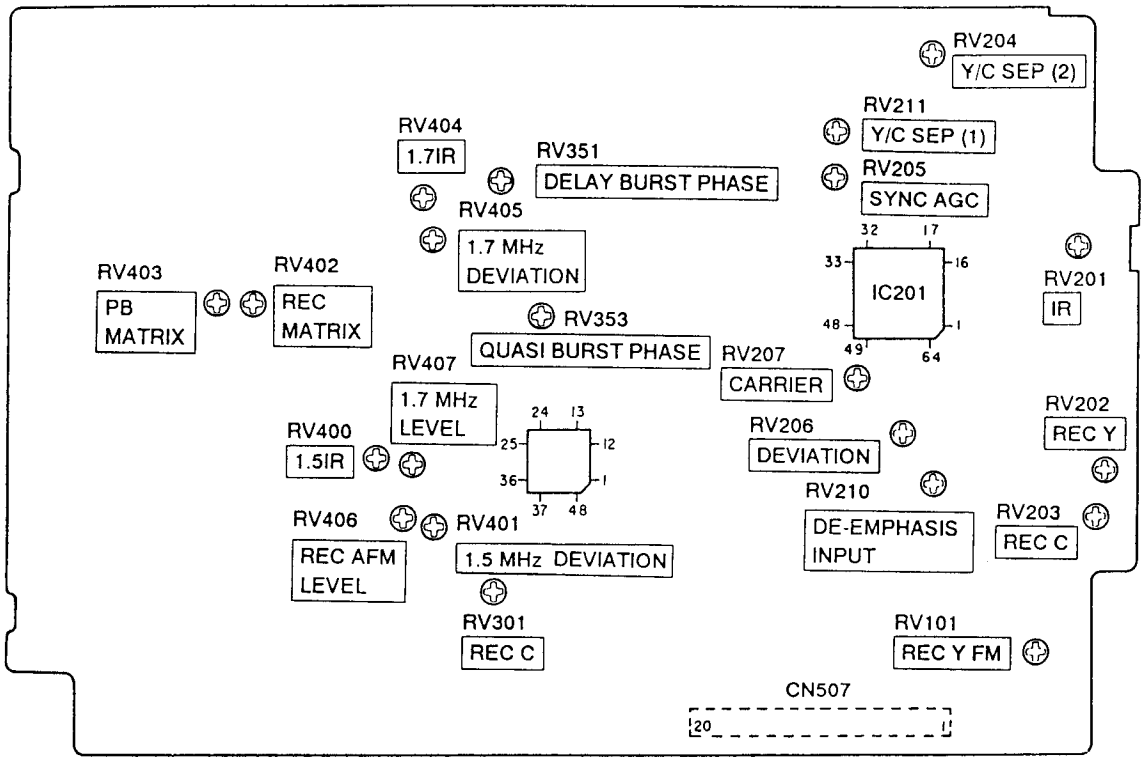

CT-40 BOARD (COMPONENT SIDE)
(Also illustarated on page 272.)

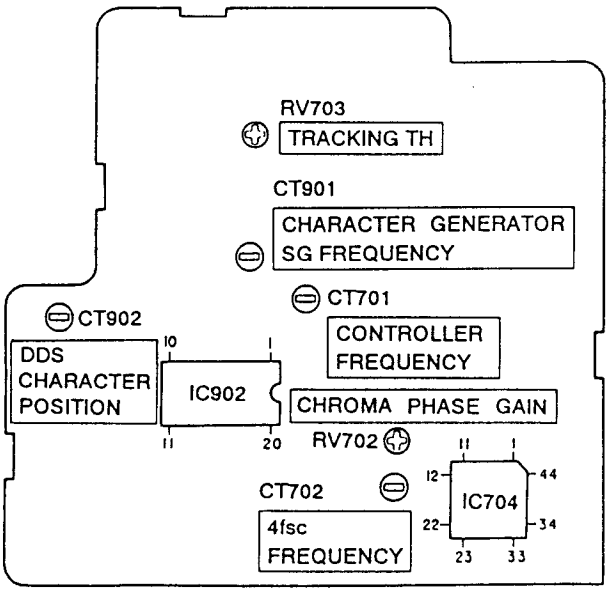

For Service Manuals Contact
MAURITRON TECHNICAL SERVICES
8 Cherry Tree Rd, Chinnor
Oxon OX9 4QY
Tel:- 01844-351694 Fax:- 01844-352254
Email:- enquiries@mauritron.co.uk

: WINDOW OFF (ADJUSTMENT) MODE
(PAGE: 5, ADDRESS: 00, DATA: 01)
: WINDOW ON (NORMAL) MODE
(PAGE: 5, ADDRESS: 00, DATA: 10)

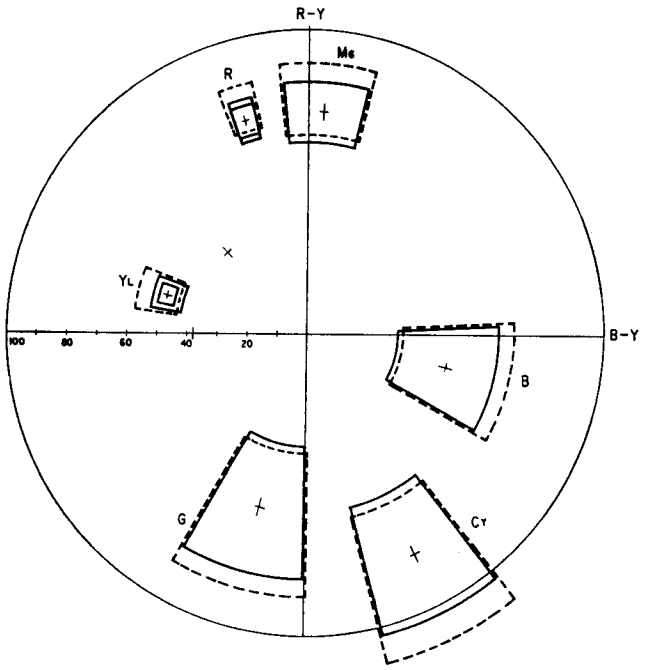

For Vectorscope

WINDOW OFF (ADJUSTMENT) MODE
(PAGE: 5, ADDRESS: 00, DATA: 01)

For Service Manuals Contact
MAURITRON TECHNICAL SERVICES
8 Cherry Tree Rd, Chinnor
Oxon OX9 4QY
Tel:- 01844-351694 Fax:- 01844-352554
Email:- enquiries@mauritron.co.uk

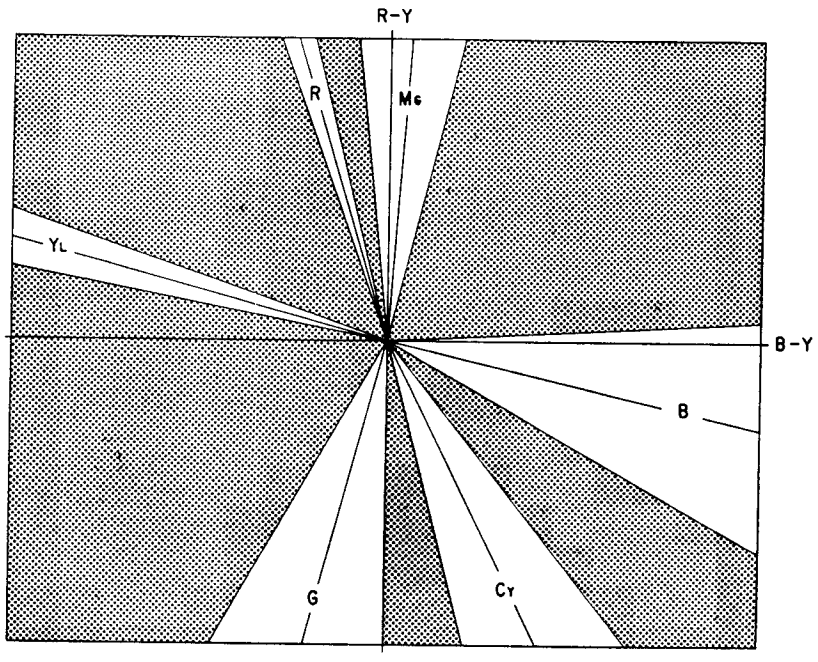

For Oscilloscope

For Service Manuals Contact
MAURITRON TECHNICAL SERVICES
8 Cherry Tree Rd, Chinnor
Oxon OX9 4QY
Tel:- 01844-351694 Fax:- 01844-352554
Email:- enquiries@mauritron.co.uk

9-973-049-11

Sony Corporation
Personal Video Group

English
91F0967-1
Printed in Japan
© 1991. 6
Published by Customer Relations and Service Group